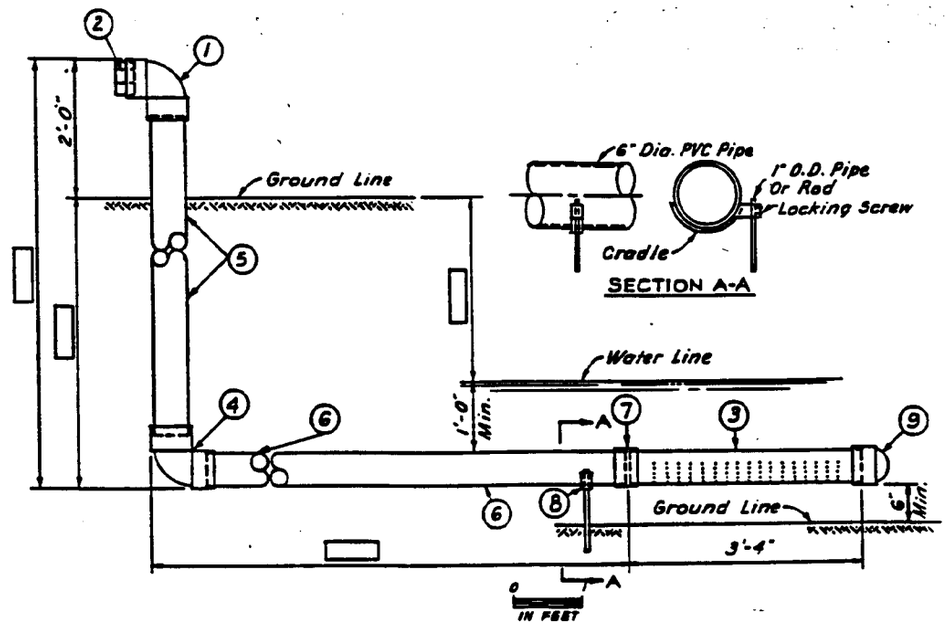

DETAILED HYDRANT LOCATION

PIPE DETAILS

BILL OF MATERIALS

ITEM	MARK	QUAN	UNIT
6" To 5" Hydrant Assembly - 90° Bend	1	1	Each
Hydrant Cap - 5"	2	1	Each
6" x 3'-4" PVC Strainer	3	1	Each
6" Sch. 40 PVC 90° Bend	4	1	Each
6" Sch. 40 PVC Pipe - Riser	5		Lin. Ft.
6" Sch. 40 PVC Pipe	6		Lin. Ft.
6" Sch. 40 PVC Couplings	7		Each
Underwater Support	8	1	Each
Strainer Cap	9	1	Each
Primer Cleaner			Can
PVC Glue			Can

QUANTITIES

ITEM	QUAN	UNIT
Pool		Acres
Drought Pool		Acres
Minimum Draw		Feet
Maximum Draw		Feet
Available Water At Normal Level		Gal.
Available Water At Drought Level		Gal.

℄ PIPELINE PROFILE

GENERAL LOCATION MAP

POND - DRY HYDRANT

NO. _____

_____ COUNTY, GEORGIA

PROFILES & LOCATION MAP

U. S. DEPARTMENT OF AGRICULTURE
SOIL CONSERVATION SERVICE

Designed _____ Date _____
Drawn _____ Date _____
Traced _____ Date _____
Checked _____ Date _____

Approved by _____
Title _____
Title _____
Sheet No. _____ of _____
Drawing No.