UNITED STATES DEPARTMENT OF AGRICULTURE
NATURAL RESOURCES CONSERVATION SERVICE

GEORGIA STANDARD DRAWINGS FOR HURRICANE REGIONS -
WINTER FEEDER FACILITY FOR 40 HEAD CONSTRUCTED WITH 6" X 8" POSTS SPACED 10' O.C. AND ENGINEERED TRUSSES SPACED 5' O.C.

1. The following drawings were prepared in accordance with Practice Code 313 - Waste Storage Facility and Georgia Building Code (International Building Code 2000). This building is designed to sustain wind speeds of 110 mph with no snow load.
2. Engineered trusses shall be designed to sustain the above listed conditions and 3228 lbs uplift at each truss to girder connection.
3. This design is intended for 12' walls without the option of a sideshed.
4. This design is not intended for construction on an isolated hill, ridge, or escarpment in any region of the state.
5. Any changes to these drawings must be approved by an engineer with job approval Level IV or greater.

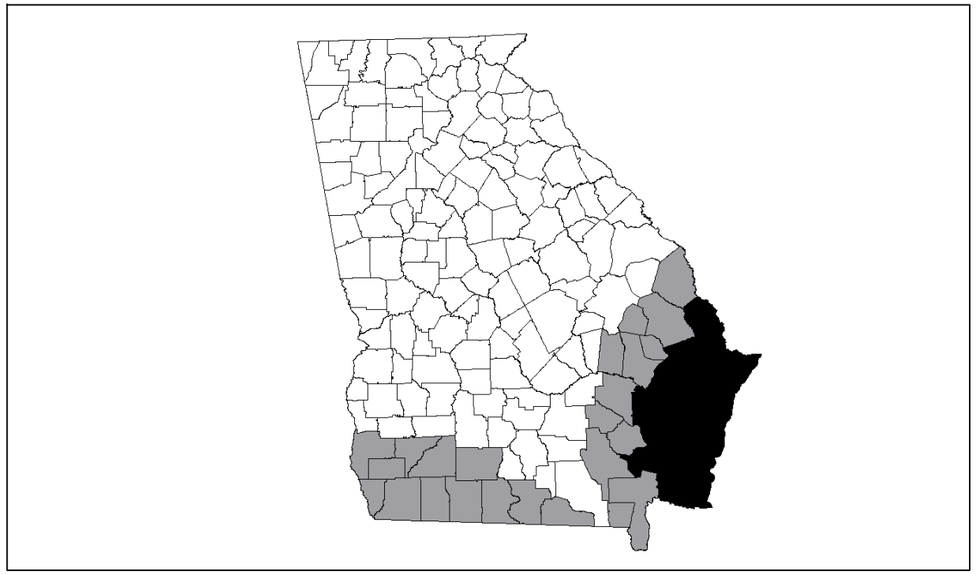

This design is intended for use in counties subject to hurricane wind loads up to 110 mph shaded gray above. Do not use this design for counties shaded black. Counties shaded black are subject to 120 mph wind loads.

_____ WINTER FEEDER FACILITY

_____ COUNTY, GEORGIA

PRE–CONSTRUCTION CERTIFICATION:

THE _____ WINTER FEEDER WILL BE CONSTRUCTED IN ACCORDANCE WITH THE FOLLOWING DRAWINGS AND PRACTICE CODE 313. ALL CHANGES HAVE BEEN APPROVED BY AN ENGINEER WITH JOB APPROVAL AUTHORITY LEVEL IV OR GREATER. ALL ADDITIONS HAVE BEEN APPROVED BY NRCS.

OWNER DATE | NRCS REPRESENTATIVE DATE | ENGINEER (IF REQUIRED) DATE

AS–BUILT CERTIFICATION:

THIS PRACTICE HAS BEEN CONSTRUCTED IN ACCORDANCE TO THESE PLANS AND MEETS NRCS STANDARDS AND SPECIFICATIONS.

NRCS REPRESENTATIVE DATE | ENGINEER (IF REQUIRED) DATE

INDEX TO DRAWINGS:

SHEET 1 - COVER SHEET

SHEET 2 - ISOMETRIC VIEW
GENERAL NOTES

SHEET 3 - PLAN VIEW

SHEET 4 - SIDE WALL DETAIL
FIBER REINFORCED CONTRACTION JOINT DETAIL
MECHANICAL POST ANCHOR DETAIL
CONCRETE POST FOOTING DETAIL

SHEET 5 - WOOD TREATMENT TABLE
TRUSS TO POST CONNECTION DETAIL
TRUSS TO GIRDER CONNECTION DETAIL
HURRICANE STRAP DETAILS
Y-BRACING DETAIL

SHEET 6 - TRUSS BRACING DETAILS

WASTE STORAGE FACILITY:
JOB CLASS: _____

Helping People Help the Land
An Equal Opportunity Provider and Employer

REVISIONS		
DATE	APPROVED	TITLE
06/11	J HOLLOWAY	STATE ENGINEER

		Date
Designed	B KIMSEY / W BROWN	09/05
Drawn	W BROWN / S GOSS	10/05
Checked	H MCFARLAND / B KIMSEY	10/05
Approved	H MCFARLAND	10/05

GEORGIA WINTER FEEDER
40 HEAD - FOR HURRICANE REGIONS
(12' Walls, 6"x8" Posts Spaced 10' o.c.)

NRCS Natural Resources Conservation Service

File Name
ga–eng–313–wf4

Drawing Name
Cover

06/17/2011 8:57 AM
Sheet 1 of 6

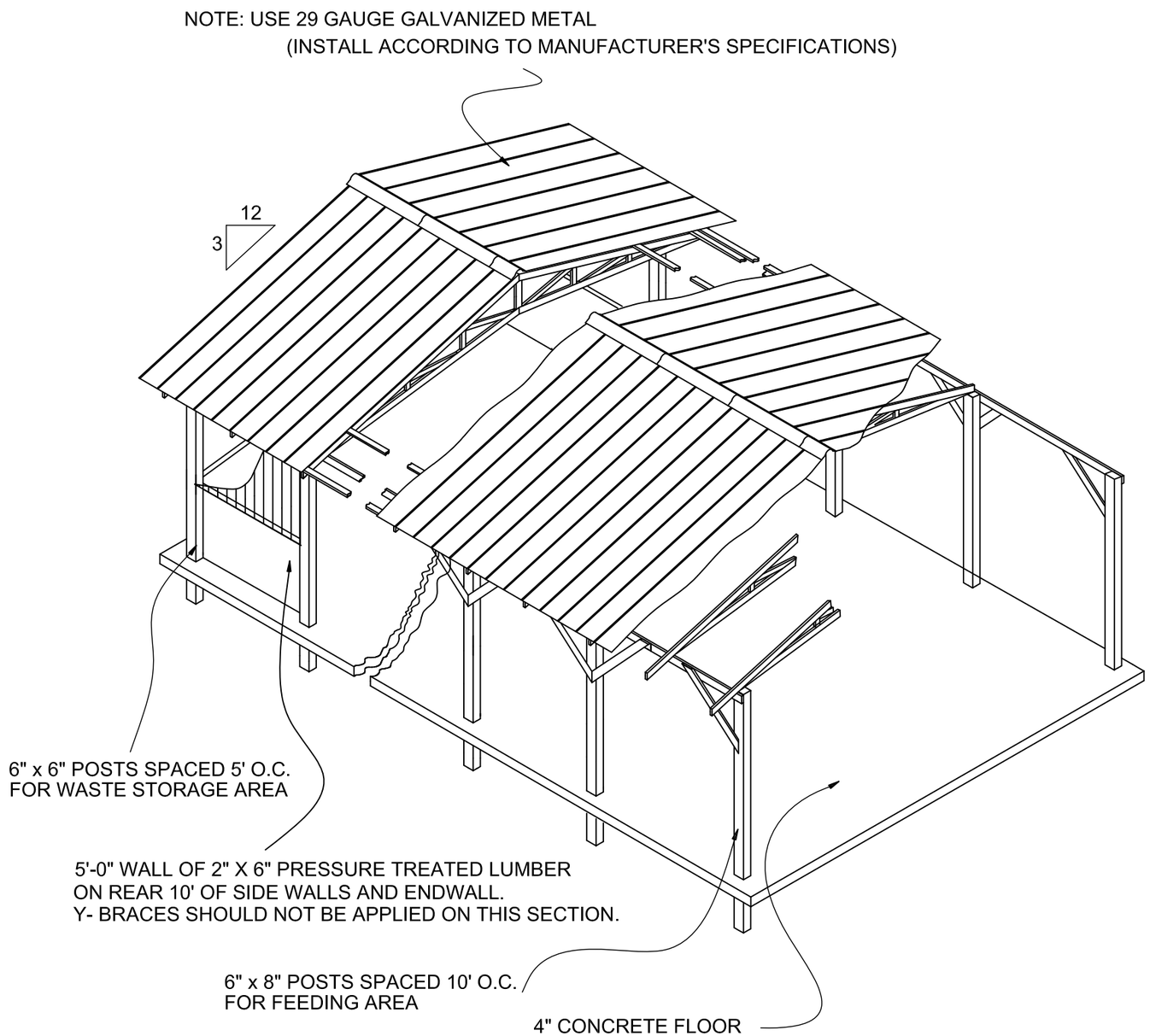

ISOMETRIC VIEW

NOT TO SCALE

NOTES:

1. ENCLOSE BOTH GABLE ENDS.
2. ALL ENTRANCE AREAS SHOULD BE STABILIZED USING PRACTICE STANDARD 561 - HEAVY USE AREA.
3. ALL POSTS SHALL BE SET IN CONCRETE WITH A CONCRETE FOOTING PAD (SEE CONCRETE POST FOOTING DETAIL ON SHEET 4).
4. THE BUILDING SITE SHALL BE CLEARED AND GRUBBED AS REQUIRED. PROPER DRAINAGE SHALL BE PROVIDED AROUND THE ENTIRE BUILDING SO THAT RUNOFF WATER DOES NOT ENTER OR POND NEAR BUILDING. DESIGN FOR ROOF RUNOFF IN ACCORDANCE WITH PRACTICE CODE 558 - ROOF RUNOFF MANAGEMENT OR STABILIZE SOIL AROUND BUILDING USING PRACTICE CODE 342 - CRITICAL AREA PLANTING.
5. CONCRETE FLOORS AND FOOTINGS SHALL BE PLACED ON FIRM SOIL. ALL LOOSE SOIL SHALL BE REMOVED. IF FILL MATERIAL IS USED, PLACE IN 9" THICK LAYERS AND COMPACT WITH SHEEPSFOOT ROLLER OR OTHER EQUIVALENT COMPACTION METHOD.
6. TRUSSES AND MANUFACTURED BEAMS SHALL BE DESIGNED BY A PROFESSIONAL ENGINEER LICENSED IN GEORGIA AND WILL BE INSTALLED AS DESIGNED. DESIGNS STAMPED BY PROFESSIONAL ENGINEER SHALL BE PROVIDED TO NRCS FOR REVIEW.
7. ALL LUMBER, INCLUDING THE POSTS, IN CONTACT WITH LITTER OR CONCRETE SHALL BE PRESSURE TREATED (SEE WOOD TREATMENT TABLE ON SHEET 5).
8. ALL DIMENSION LUMBER SHALL BE SOUTHERN PINE NO. 2 OR BETTER.
9. ALL NAILS, BOLTS, AND OTHER CONNECTORS SHALL BE OF HOT-DIPPED ZINC COATED GALVANIZED STEEL, STAINLESS STEEL, SILICON BRONZE, OR COPPER. NAILS SHALL HAVE SPIRAL OR RINGED (ANNULAR) SHANKS. ALL REFERENCES TO "GALVANIZED" IN THIS SET OF DRAWINGS REFERS TO THE ABOVE LISTED COATINGS.
10. POWER SUPPLY TO THE BUILDING IS RECOMMENDED FOR NIGHT OPERATIONS AND REPAIR WORK.
11. ALL DISTURBED AREAS SHALL BE VEGETATED USING PRACTICE CODE 342 - CRITICAL AREA PLANTING.
12. ROOFING SHALL BE 29 GUAGE GALVANIZED METAL. SEALANT SHALL BE APPLIED TO ALL LAPS.
13. CALL BEFORE YOU DIG: 1-800-282-7411 OR 770-623-4344.

REVISIONS		
DATE	APPROVED	TITLE

		Date
Designed	B KIMSEY W BROWN	09/05
Drawn	W BROWN S GOSS	10/05
Checked	H MCFARLAND B KIMSEY	10/05
Approved	H MCFARLAND	10/05

GEORGIA WINTER FEEDER
40 HEAD - FOR HURRICANE REGIONS
(12' Walls, 6"x8" Posts Spaced 10' o.c.)

NRCS
Natural Resources Conservation Service

File Name
ga-eng-313-wf4

Drawing Name
Isometric

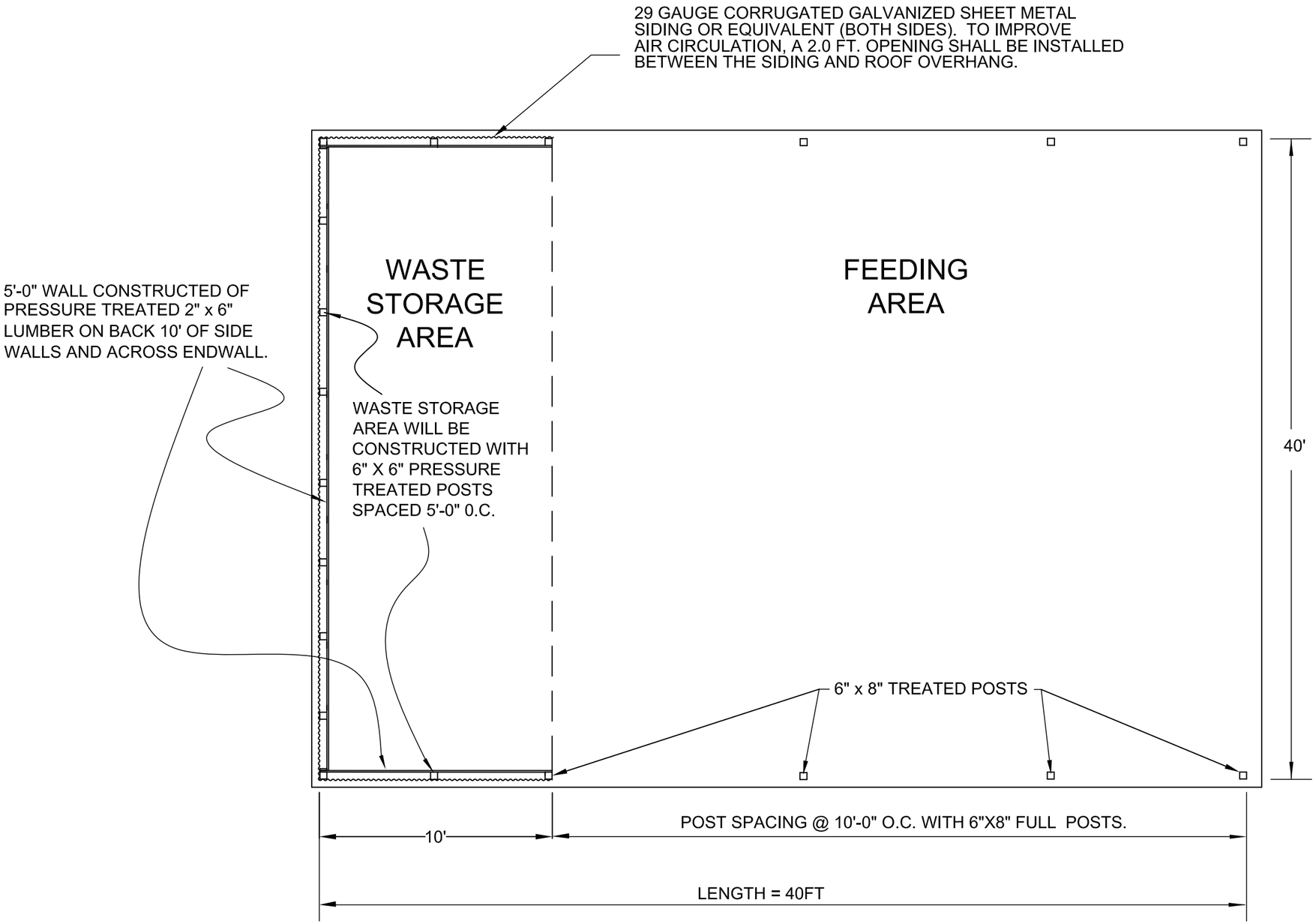

CONCRETE QUANTITY:

(1) FLOOR : 21.78 CY

(2) POST HOLES : 15.99 CY

PLAN VIEW

NOT TO SCALE

NOTES:

1. ALL POSTS WILL EXTEND INTO THE GROUND A MINIMUM OF 4'-2" AS SHOWN IN THE POSTHOLE DETAIL ON SHEET 4
2. FIBER-REINFORCED CLASS 3000 CONCRETE @ RATE OF 1.5 LB FIBER PER CUBIC YARD OF CONCRETE SHALL BE APPLIED TO FEEDING AND WASTE STORAGE AREA.

REVISIONS		
DATE	APPROVED	TITLE

		Date
Designed	B KIMSEY W BROWN	09/05
Drawn	W BROWN S GOSS	10/05
Checked	H MCFARLAND B KIMSEY	10/05
Approved	H MCFARLAND	10/05

GEORGIA WINTER FEEDER
40 HEAD - FOR HURRICANE REGIONS
(12' Walls, 6"x8" Posts Spaced 10' o.c.)

NRCS
Natural Resources Conservation Service

File Name
ga-eng-313-wf4

Drawing Name
Plan

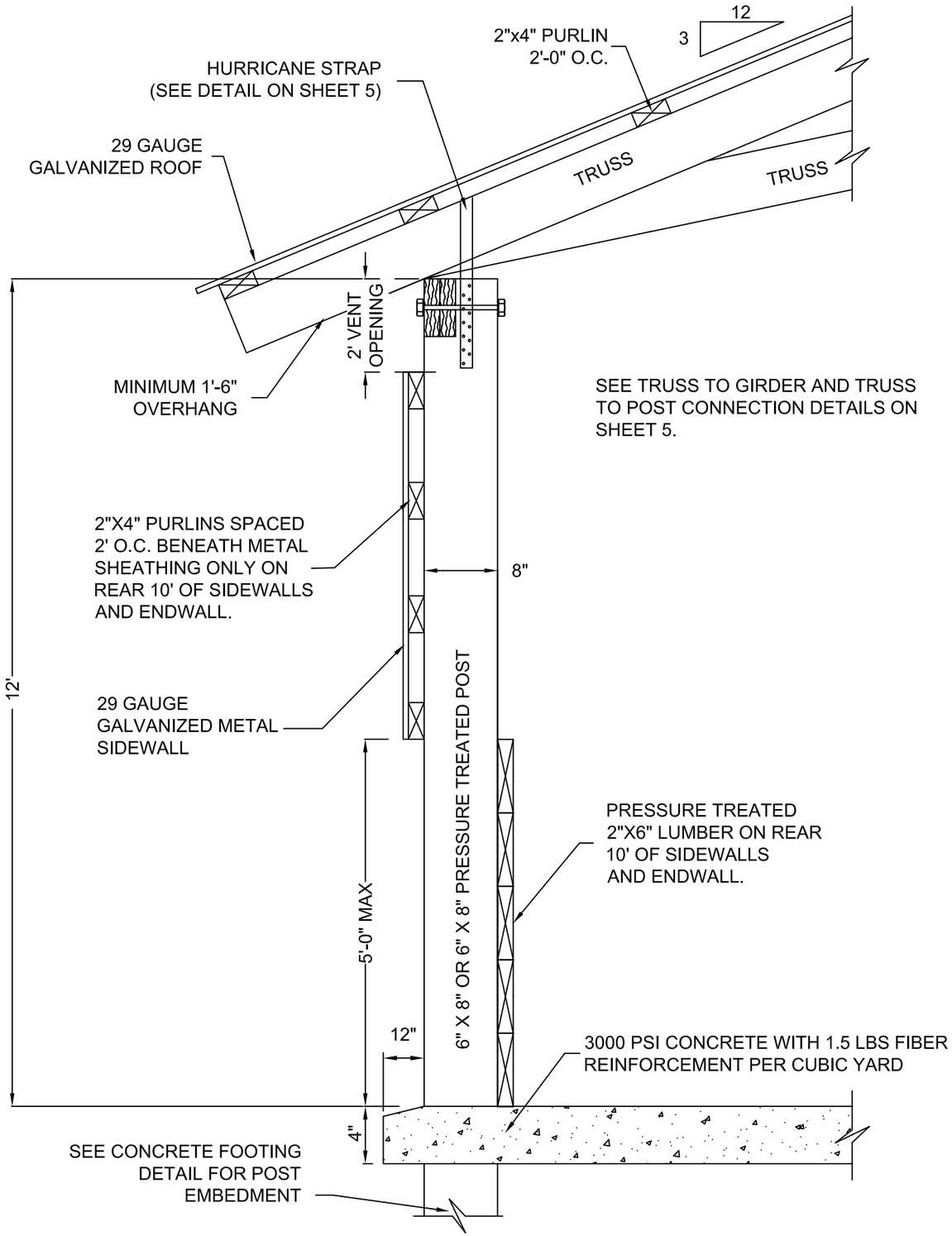

SEE TRUSS TO GIRDER AND TRUSS TO POST CONNECTION DETAILS ON SHEET 5.

SIDE WALL DETAIL

NOT TO SCALE

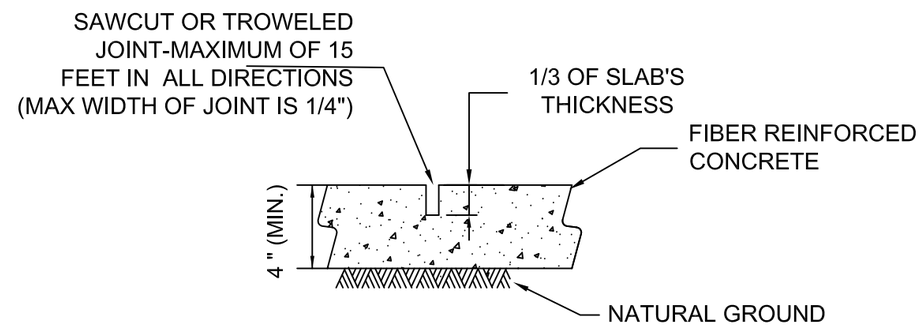

FIBER REINFORCED CONTRACTION JOINT

NOT TO SCALE

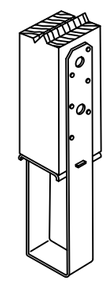

NOTES:

1. EXAMPLE CONNECTOR SHOWN AT LEFT.
2. MINIMUM UPLIFT RESISTANCE REQUIRED IS 3800 LB.
3. INSTALL ACCORDING TO MANUFACURER'S SPECIFICATIONS.

MECHANICAL POST ANCHOR DETAIL

NOT TO SCALE

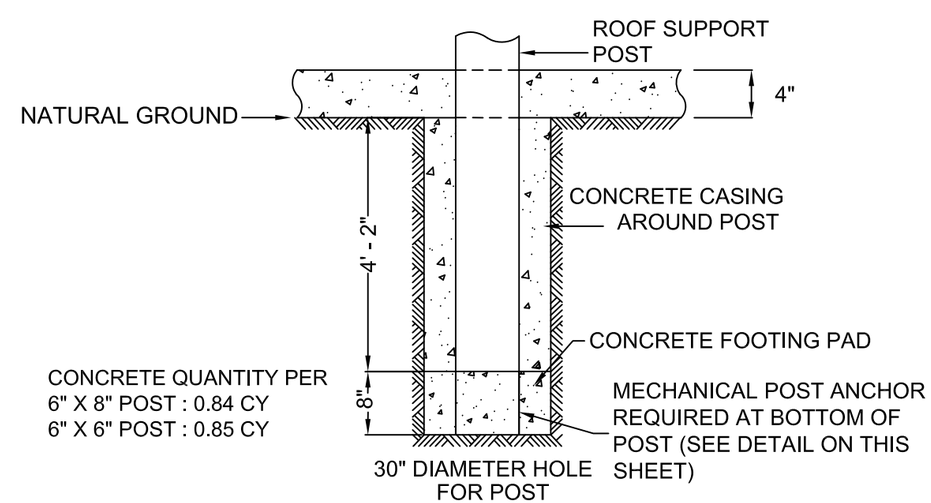

CONCRETE POST FOOTING DETAIL

NOT TO SCALE

REVISIONS		
DATE	APPROVED	TITLE

		Date
Designed	B KIMSEY W BROWN	09/05
Drawn	W BROWN S GOSS	10/05
Checked	H MCFARLAND B KIMSEY	10/05
Approved	H MCFARLAND	10/05

GEORGIA WINTER FEEDER
40 HEAD - FOR HURRICANE REGIONS
(12' Walls, 6"x8" Posts Spaced 10' o.c.)

NRCS
Natural Resources Conservation Service

File Name
ga-eng-313-wf4

Drawing Name
Sidewall

Sheet 4 of 6

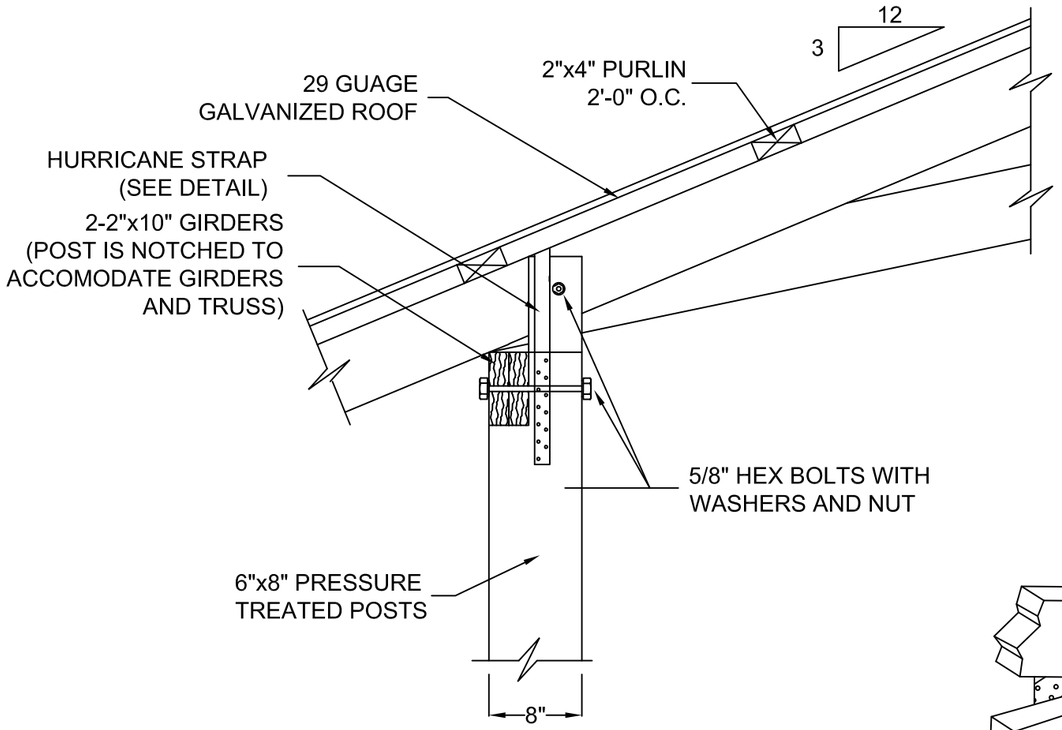

TRUSS TO POST CONNECTION DETAIL

NOT TO SCALE

NOTE: ALL BOLTS AND NAILS ARE GALVANIZED.

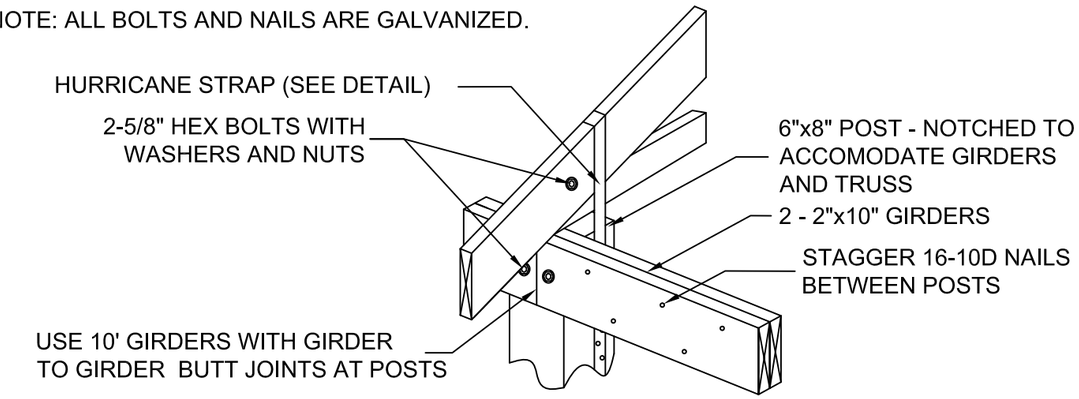

TRUSS TO GIRDER CONNECTION (WITH POST)

NOT TO SCALE

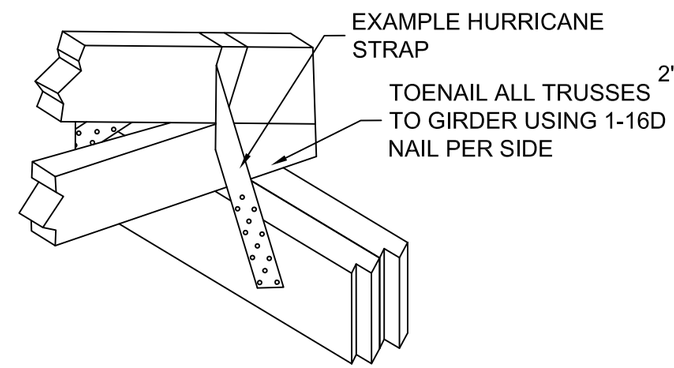

TRUSS TO GIRDER CONNECTION (WITHOUT POST)

NOT TO SCALE

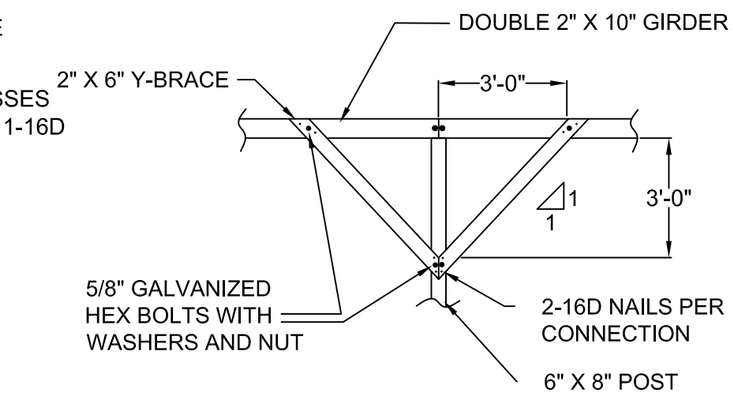

Y - BRACING (USED ON 6x8 POSTS)

NOT TO SCALE

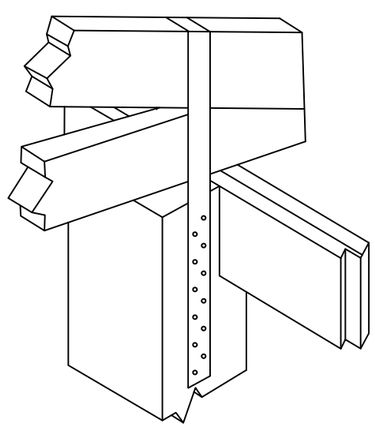

HURRICANE STRAP

NOT TO SCALE

NOTES:

1. USE HURRICANE STRAP AT POST TO TRUSS CONNECTION AS SHOWN AT LEFT WITH MIMIMUM UPLIFT RESISTANCE OF 2332 LBS.
2. USE MANUFACTURED HURRICANE STRAPS AT TRUSS TO GIRDER CONNECTIONS AS SHOWN AT RIGHT WITH MINIMUM UPLIFT RESISTANCE OF 1003 LBS.
3. MANUFACTURER'S SPECIFICATIONS SHALL BE PROVIDED TO NRCS.
4. INSTALL STRAPS ACCORDING TO MANUFACTURER'S SPECIFICATIONS.

WOOD TREATMENT TABLE

MINIMUM RETENTION RATES IN PCF					
USE	CCA	ACQ-C/D	CBA-A	CA-B	MCA
GROUND CONTACT OR FRESH WATER	0.40	0.40	0.41	0.21	0.15
IMPORTANT STRUCTURAL MEMBERS	0.60	0.60	0.61	0.31	0.23

CCA – CHROMATED COPPER ARSENATE
ACQ–C/D – ALKALINE COPPER QUATERNARY
CBA–A & CA–B – COPPER AZOLE
MCA – MICRONIZED COPPER AZOLE

NOTES:
1. *ALL WOODEN WALLS, HALF POSTS, AND BIN FRONT WOOD SHALL MEET THE GROUND CONTACT RATES.*
2. *ALL SUPPORT POSTS SHALL MEET THE IMPORTANT STRUCTURAL MEMBER RATES.*

REVISIONS		
DATE	APPROVED	TITLE
10/2010	J. HOLLOWAY	STATE ENGINEER

		Date
Designed	B KIMSEY W BROWN	09/05
Drawn	W BROWN S GOSS	10/05
Checked	H MCFARLAND B KIMSEY	10/05
Approved	H MCFARLAND	10/05

GEORGIA WINTER FEEDER
40 HEAD - FOR HURRICANE REGIONS
(12' Walls, 6"x8" Posts Spaced 10' o.c.)

NRCS
Natural Resources Conservation Service
United States Department of Agriculture

File Name
ga–eng–313–wf4_rev 102010

Drawing Name
Details

10/29/2010 2:58 PM

Sheet 5 of 6

NOTE:

1. **BRACING REQUIREMENTS SHOWN ON THIS PAGE ARE THE MINIMUM REQUIRED BY NRCS.**
2. BRACING SHALL BE INSTALLED AS THE TRUSSES ARE ERECTED.
3. UNLESS SPECIFIED OTHERWISE, ALL BRACING SHALL CONSIST OF 2" X 4" STRESS-GRADED LUMBER CONNECTED WITH TWO 16D DEFORMED SHANK NAILS TO EACH TRUSS MEMBER THE BRACE CROSSES.
4. EXCEPT FOR TOP CHORD BRACING, ALL CONTINUOUS AND DIAGONAL BRACING SPLICES SHALL OVERLAP BETWEEN TWO TRUSSES (SEE WEB MEMBER BRACING DETAIL BELOW).
5. ADDITIONAL TEMPORARY BRACING REQUIRED BY THE CONTRACTOR DURING CONSTUCTION SHALL BE REMOVED WHEN CONSTRUCTION IS COMPLETE.
6. CONTACT YOUR AREA ENGINEER IF YOU HAVE ANY QUESTIONS REGARDING TRUSS BRACING.

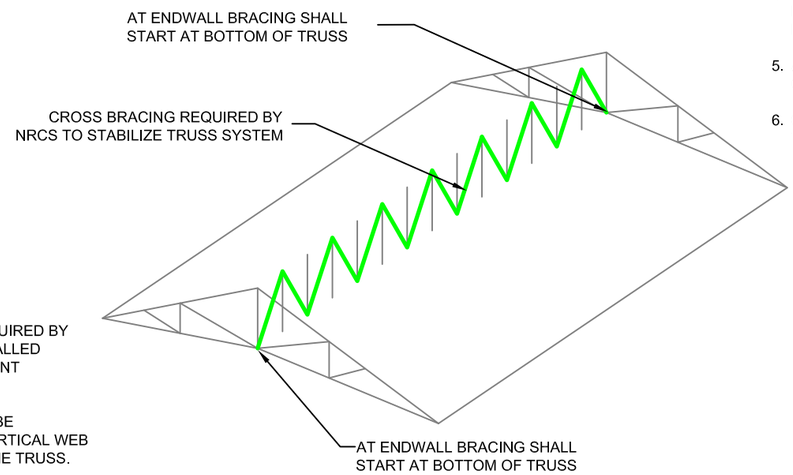

NOTE:

1. CROSS BRACING (REQUIRED BY NRCS) SHALL BE INSTALLED BETWEEN ALL ADJACENT TRUSSES.
2. THIS BRACING SHALL BE ATTACHED TO THE VERTICAL WEB AT THE CENTER OF THE TRUSS.
3. IF THERE IS NO VERTICAL WEB AT THE CENTER OF THE TRUSS THEN BLOCKING SHALL BE ADDED AS NECESSARY TO INSTALL THE BRACE.

ISOMETRIC VIEW OF VERTICAL CROSS BRACING

NOTE:

1. BOTTOM CHORD BRACING IS NORMALLY SPECIFIED BY THE TRUSS DESIGNER ON THE TRUSS DESIGN DRAWING.
2. THE MINIMUM BOTTOM CHORD BRACING REQUIRED BY NRCS SHALL CONSIST OF THREE EQUALLY SPACED CONTINUOUS LATERAL BRACES.
3. LATERAL BRACING SHALL BE REINFORCED WITH DIAGONAL BRACING EVERY 20 FEET AS SHOWN. THIS IS AN NRCS REQUIREMENT AND WILL NOT BE SHOWN ON THE TRUSS DESIGN DRAWING.

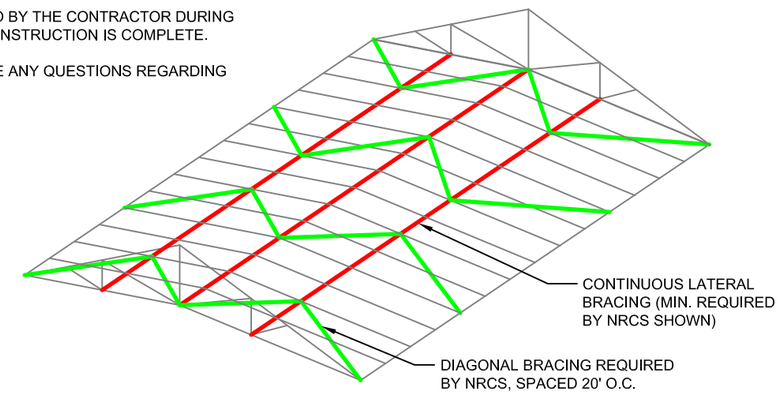

ISOMETRIC VIEW OF BOTTOM CHORD BRACING

NOTE:

1. WEB MEMBER BRACING SHALL CONSIST OF BRACING AS SPECIFIED BY THE TRUSS MANUFACTURER ON THE TRUSS DESIGN DRAWING.
2. NORMALLY THIS WILL CONSIST OF CONTINUOUS LATERAL BRACES INSTALLED AT THE CENTER OF COMPRESSION WEB MEMBERS. IN SOME CASES THE BRACING MAY CONSIST OF "L" OR "T" SCAB BRACING.
3. ALL CONTINUOUS LATERAL BRACES SHALL BE REINFORCED WITH DIAGONAL BRACING EVERY 20 FEET AS SHOWN. THIS IS AN NRCS REQUIREMENT AND WILL NOT BE SHOWN ON THE TRUSS DESIGN DRAWING.

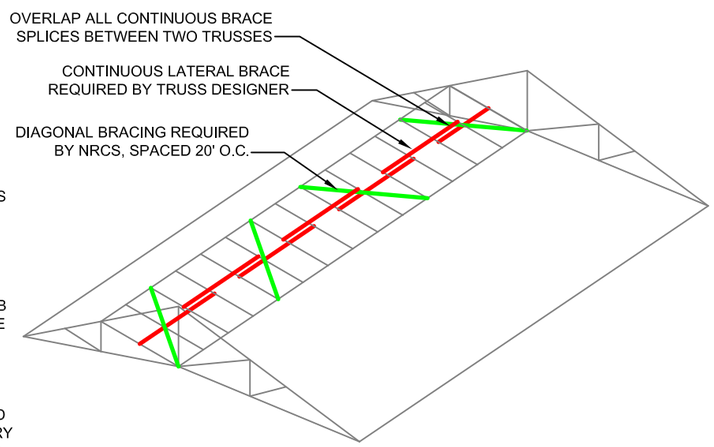

ISOMETRIC VIEW OF WEB MEMBER BRACING

NOTE:

1. TOP CHORD BRACING SHALL CONSIST OF 2" X 4" PURLINS (SOUTHERN PINE #2 OR BETTER) SPACED 2' O.C. AS SHOWN ON SHEET 4.
2. TEMPORARY DIAGONAL BRACING SHALL ALSO BE REQUIRED IF ROOFING IS NOT INSTALLED IMMEDIATELY OVER THE PURLINS.

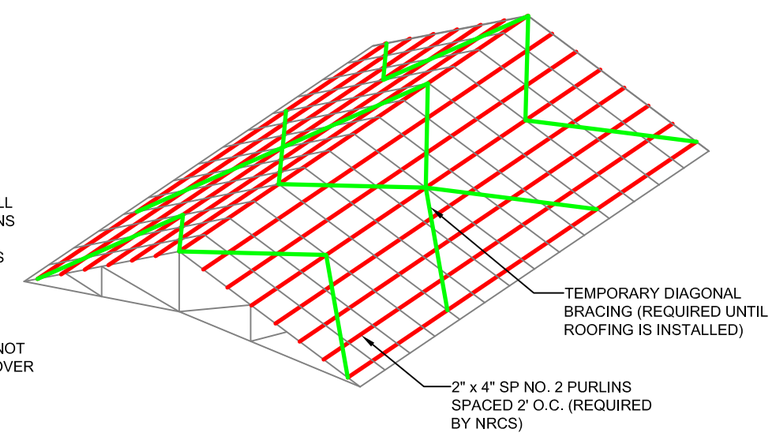

ISOMETRIC VIEW OF TOP CHORD BRACING

		Date
Designed	B KIMSEY W BROWN	09/05
Drawn	W BROWN S GOSS	10/05
Checked	H MCFARLAND B KIMSEY	10/05
Approved	H MCFARLAND	10/05

GEORGIA WINTER FEEDER
40 HEAD - FOR HURRICANE REGIONS
(12' Walls, 6"x8" Posts Spaced 10' o.c.)

NRCS Natural Resources Conservation Service

File Name ga-eng-313-wf4

Drawing Name Bracing

REVISIONS		
DATE	APPROVED	TITLE