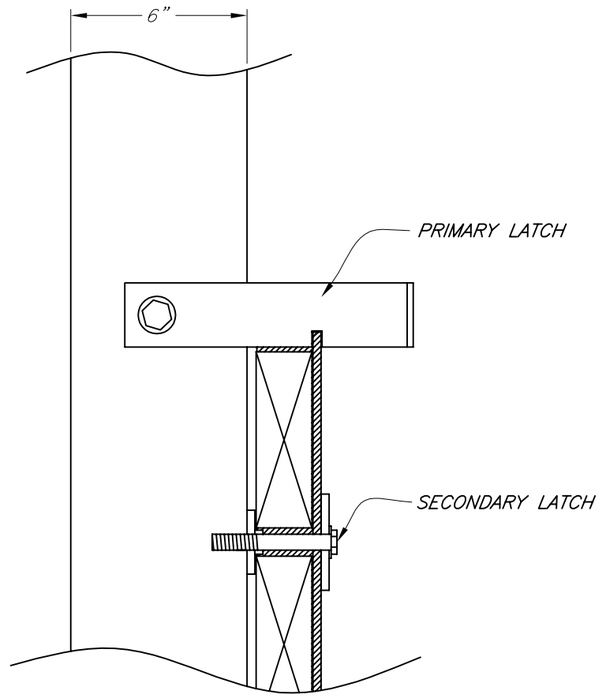

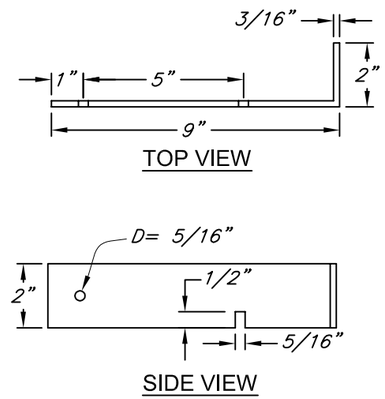

PRIMARY LATCH

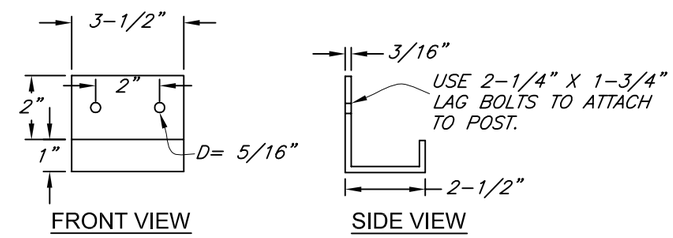

FLOOR BRACKET

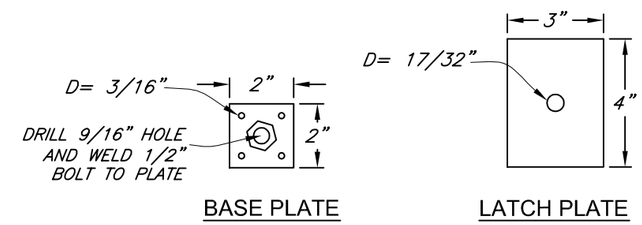

SECONDARY LATCH COMPONENTS

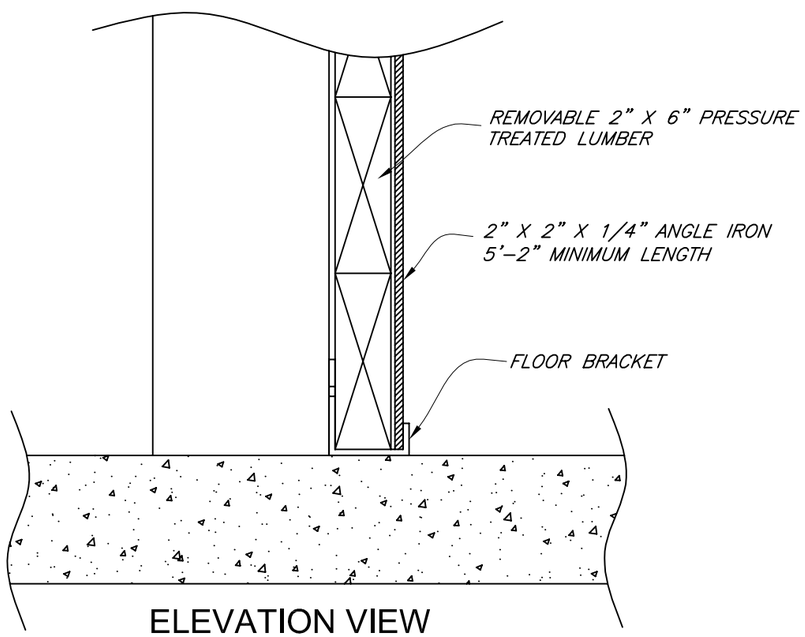

ELEVATION VIEW

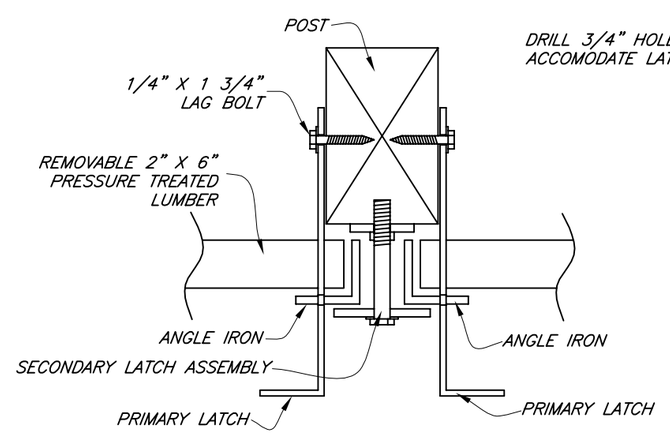

QUICK RELEASE TOP VIEW

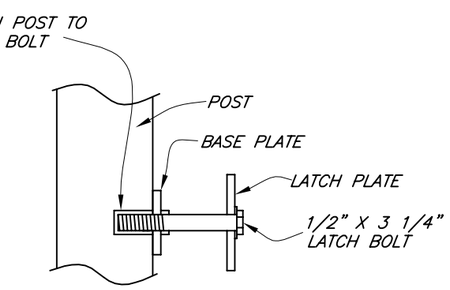

SECONDARY LATCH ASSEMBLY

REVISIONS			
DATE	APPROVED	TITLE	
09/05	H MCFARLAND	STATE ENGINEER	
07/07	H MCFARLAND	STATE ENGINEER	
11/07	H MCFARLAND	STATE ENGINEER	

		Date
Designed	E. Adams	11/07
Drawn	S. Rogers	11/07
Checked	H. McFarland / J. Holloway	11/07
Approved		

GEORGIA COMPOSTING FACILITY
(Quick Release Bin Front)

_____ County, GA

NRCS
Natural Resources Conservation Service
United States Department of Agriculture

File No.
ga-eng-317-bin.pdf

Drawing No.
Bin

11/5/2007 4:22 PM

Sheet 1 of 1