UNITED STATES DEPARTMENT OF AGRICULTURE
NATURAL RESOURCES CONSERVATION SERVICE

GEORGIA STANDARD DRAWINGS - 20' WIDE, STANDARD BIN, STAND ALONE COMPOST FACILITY CONSTRUCTED WITH 6" X 6" POSTS

1. *THE FOLLOWING DRAWINGS WERE PREPARED IN ACCORDANCE WITH PRACTICE CODE 317–COMPOSTING FACILITY AND GEORGIA BUILDING CODE (INTERNATIONAL BUILDING CODE 2006)*

2. *DESIGN DATA REQUIRED BY IBC 2006:*

   A) ROOF LIVE LOAD – 20 PSF.
   B) BASIC WIND SPEED OF 90 MPH AND GROUND SNOW LOAD OF 10 PSF OR BASIC WIND SPEED OF 100 MPH AND NO SNOW LOAD.
   C) IMPORTANCE FACTOR, I=0.87
   D) WIND EXPOSURE CATEGORY C.
   E) INTERNAL PRESSURE COEFFICIENT = 0.55

3. *THIS DESIGN IS NOT INTENDED FOR USE IN EXTREME SOUTH AND EAST COUNTIES OF THE STATE THAT ARE SUBJECT TO HURRICANE WIND LOADS (SEE MAP BELOW)*

4. *THIS DESIGN IS NOT INTENDED FOR CONSTRUCTION ON AN ISOLATED HILL, RIDGE, OR ESCARPMENT IN ANY REGION OF THE STATE.*

5. *ANY CHANGES TO THESE DRAWINGS MUST BE APPROVED BY AN ENGINEER WITH JOB APPROVAL LEVEL IV OR GREATER.*

6. *NO ADDITIONS SHOULD BE MADE TO STRUCTURE WITHOUT APPROVAL FROM NRCS.*

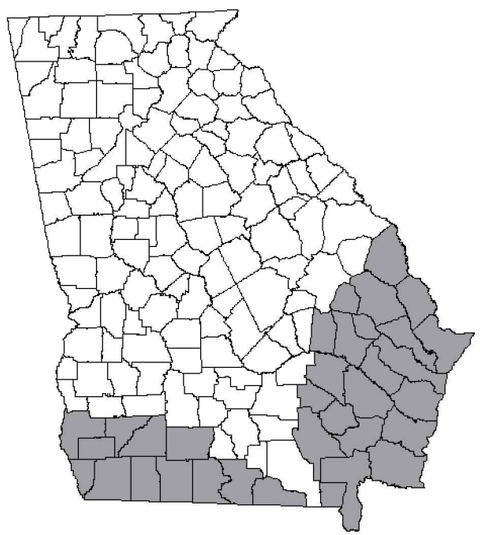

THIS DESIGN IS NOT INTENDED FOR USE IN COUNTIES SUBJECT TO HURRICANE WIND LOADS SHADED GRAY ABOVE.

THE NATURAL RESOURCES CONSERVATION SERVICE
HELPING PEOPLE HELP THE LAND

_____ COMPOST FACILITY

_____ COUNTY, GEORGIA

PRE–CONSTRUCTION CERTIFICATION:

THE _____ COMPOSTING FACILITY HAS BEEN CONSTRUCTED IN ACCORDANCE WITH THE FOLLOWING DRAWINGS AND PRACTICE CODE 317. ALL CHANGES HAVE BEEN APPROVED BY AN ENGINEER WITH JOB APPROVAL AUTHORITY LEVEL IV OR GREATER. ALL ADDITIONS HAVE BEEN APPROVED BY NRCS.

OWNER	DATE	NRCS REPRESENTATIVE	DATE	ENGINEER (IF REQUIRED)	DATE

AS–BUILT CERTIFICATION:

THIS PRACTICE HAS BEEN CONSTRUCTED IN ACCORDANCE TO THESE PLANS AND MEETS NRCS STANDARDS AND SPECIFICATIONS.

NRCS REPRESENTATIVE	DATE	ENGINEER (IF REQUIRED)	DATE

COMPOSTING FACILITY:

JOB CLASS: _____

INDEX TO DRAWINGS:

SHEET 1 - COVER SHEET

SHEET 2 - PLAN VIEW
ELEVATION VIEW
FRONT VIEW
GENERAL NOTES

SHEET 3 - ROOF FRAMING PLAN

SHEET 4 - GIRDER AND RAFTER TO POST CONNECTIONS
HURRICANE STRAP
HURRICANE CLIP

SHEET 5 - WOOD TREATMENT TABLE
STANDARD BIN FRONT-TOP VIEW
CONCRETE POST FOOTING DETAIL
MECHANICAL ANCHOR POST CONCRETE FOOTING DETAIL
FIBER REINFORCED CONTRACTION JOINT

GEORGIA811 Utilities Protection Center, Inc. Know what's below. Call before you dig.

REVISIONS

DATE	APPROVED	TITLE
09/05	H MCFARLAND	STATE ENGINEER
01/06	H MCFARLAND	STATE ENGINEER
09/07	H MCFARLAND	STATE ENGINEER
06/11	J HOLLOWAY	STATE ENGINEER
07/13	D ROBERTS	ACTING STATE ENGINEER

		Date
Designed	W. Brown	09/07
Drawn	S. Rogers	09/07
Checked	H. McFarland / J. Holloway	09/07
Approved	H. McFarland	09/07

GEORGIA COMPOSTING FACILITY
(Stand Alone Structure with Standard Bins)
_____ County, GA

NRCS Natural Resources Conservation Service United States Department of Agriculture

File No. ga–eng–317–c2_rev_072013

Drawing No. Cover

July 2013

Sheet 1 of 5

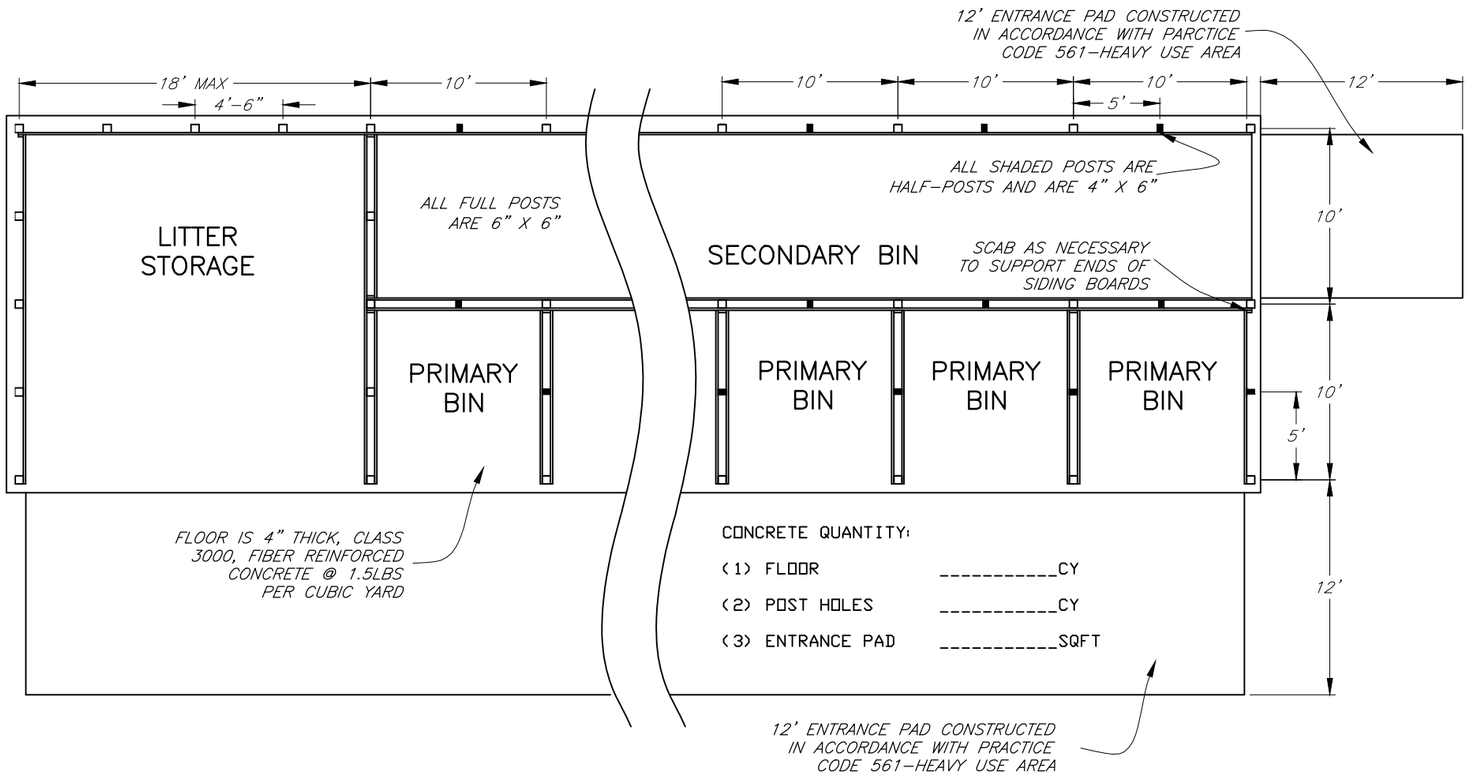

PLAN VIEW

NOTES:

1. ALL ENTRANCE AREAS SHALL BE STABILIZED USING PRACTICE STANDARD 561 – HEAVY USE AREA.
2. ALL POSTS SHALL BE SET IN CONCRETE WITH CONCRETE OR GRAVEL FOOTING PAD (SEE CONCRETE POST FOOTING DETAIL ON SHEET 5).
3. THE BUILDING SITE SHALL BE CLEARED AND GRUBBED AS REQUIRED. PROPER DRAINAGE SHALL BE PROVIDED AROUND THE ENTIRE BUILDING SO THAT RUNOFF WATER DOES NOT ENTER OR POND NEAR BUILDING. DESIGN FOR ROOF RUNOFF IN ACCORDANCE WITH PRACTICE CODE 558 – ROOF RUNOFF MANAGEMENT OR STABILIZE SOIL AROUND BUILDING USING PRACTICE CODE 342 – CRITICAL AREA PLANTING.
4. CONCRETE FLOORS AND FOOTINGS SHALL BE PLACED ON FIRM SOIL. ALL LOOSE SOIL SHALL BE REMOVED. IF FILL MATERIAL IS USED, PLACE IN 9" THICK LAYERS AND COMPACT WITH SHEEPSFOOT ROLLER OR OTHER EQUIVALENT COMPACTION METHOD.
5. ALL LUMBER, INCLUDING THE POSTS, IN CONTACT WITH LITTER, COMPOST, OR CONCRETE SHALL BE PRESSURE TREATED (SEE WOOD TREATMENT TABLE ON SHEET 5).
6. ALL DIMENSION LUMBER SHALL BE SOUTHERN PINE NO. 2 OR BETTER.
7. ALL NAILS, BOLTS AND OTHER CONNECTORS SHALL BE OF HOT-DIPPED ZINC COATED GALVANIZED STEEL, STAINLESS STEEL, SILICON BRONZE, OR COPPER. NAILS SHALL HAVE SPIRALED OR RINGED (ANNULAR) SHANKS. ALL REFERENCES TO "GALVANIZED" IN THIS SET OF DRAWINGS REFERS TO THE ABOVE LISTED COATINGS.
8. ROOFING SHALL BE 29 GUAGE GALVANIZED METAL. SEALANT SHALL BE APPLIED TO ALL LAPS.
9. ON SITE WATER SOURCE IS NECESSARY TO MAINTAIN MOISTURE CONTENT OF COMPOST.
10. ALL DISTURBED AREAS SHALL BE VEGETATED USING PRACTICE CODE 342 – CRITICAL AREA PLANNING.
11. CALL BEFORE YOU DIG: 811, 1-800-282-7411 OR 770-623-4344.

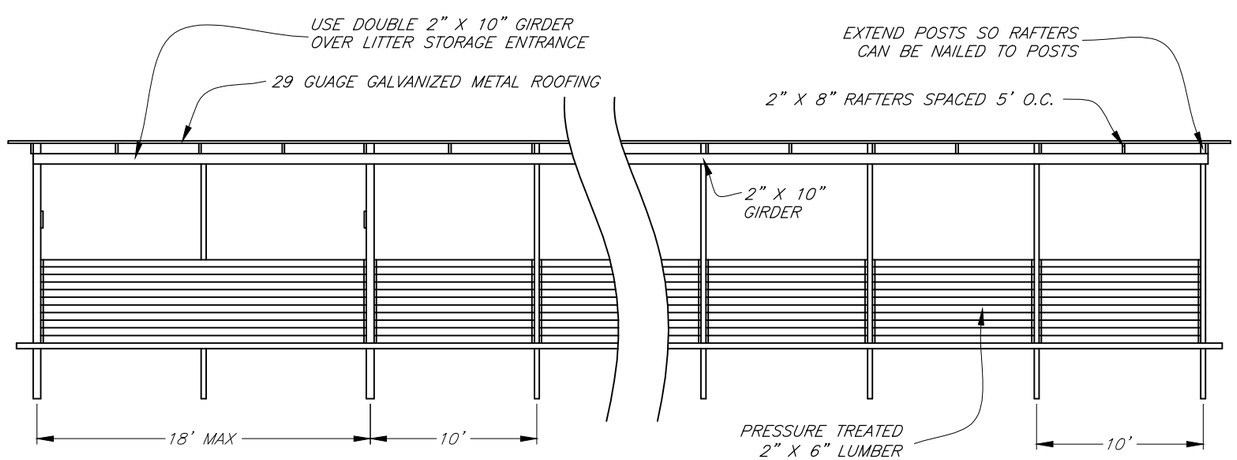

FRONT VIEW

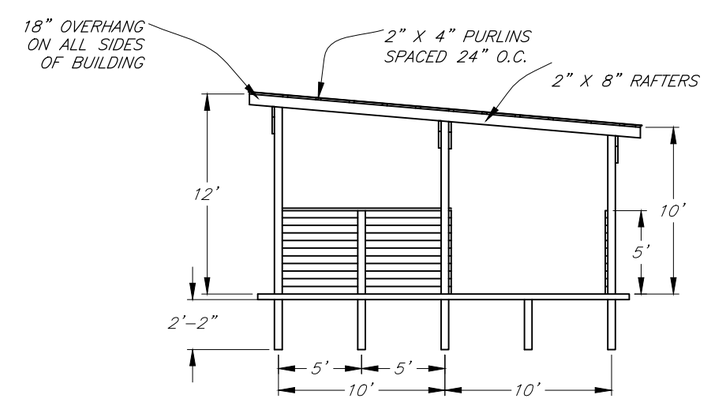

ELEVATION VIEW

REVISIONS			
DATE		APPROVED	TITLE
09/05	H	MCFARLAND	STATE ENGINEER
01/06	H	MCFARLAND	STATE ENGINEER
09/07	H	MCFARLAND	STATE ENGINEER
07/13	D	ROBERTS	ACTING STATE ENGINEER

		Date
Designed	W. Brown	09/07
Drawn	S. Rogers	09/07
Checked	H. McFarland / J. Holloway	09/07
Approved	H. McFarland	09/07

GEORGIA COMPOSTING FACILITY
(Stand Alone Structure with Standard Bins)

_____ County, GA

NRCS
Natural Resources Conservation Service
United States Department of Agriculture

File No.
ga-eng-317-c2_rev_072013

Drawing No.
Plan & Elevation

July 2013

Sheet 2 of 5

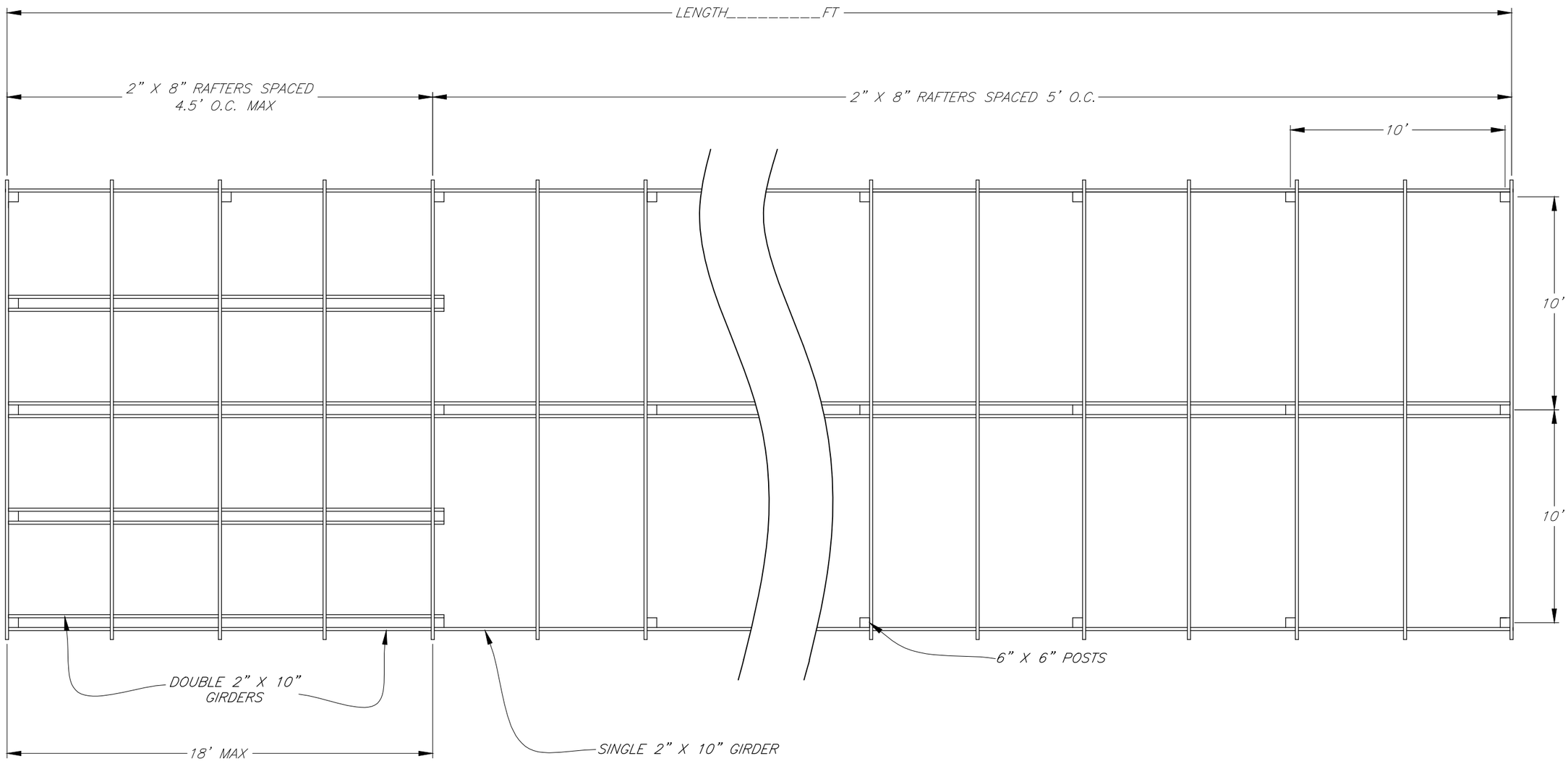

ROOF FRAMING PLAN

REVISIONS		
DATE	APPROVED	TITLE
09/05	H MCFARLAND	STATE ENGINEER
01/06	H MCFARLAND	STATE ENGINEER
09/07	H MCFARLAND	STATE ENGINEER

		Date
Designed	W. Brown	09/07
Drawn	S. Rogers	09/07
	H. McFarland	
Checked	J. Holloway	09/07
Approved	H. McFarland	09/07

GEORGIA COMPOSTING FACILITY
(Stand Alone Structure with Standard Bins)

_____ County, GA

NRCS
Natural Resources Conservation Service
United States Department of Agriculture

File No.
ga-eng-317-c2_rev_072013

Drawing No.
Roof Plan

July 2013

Sheet 3 of 5

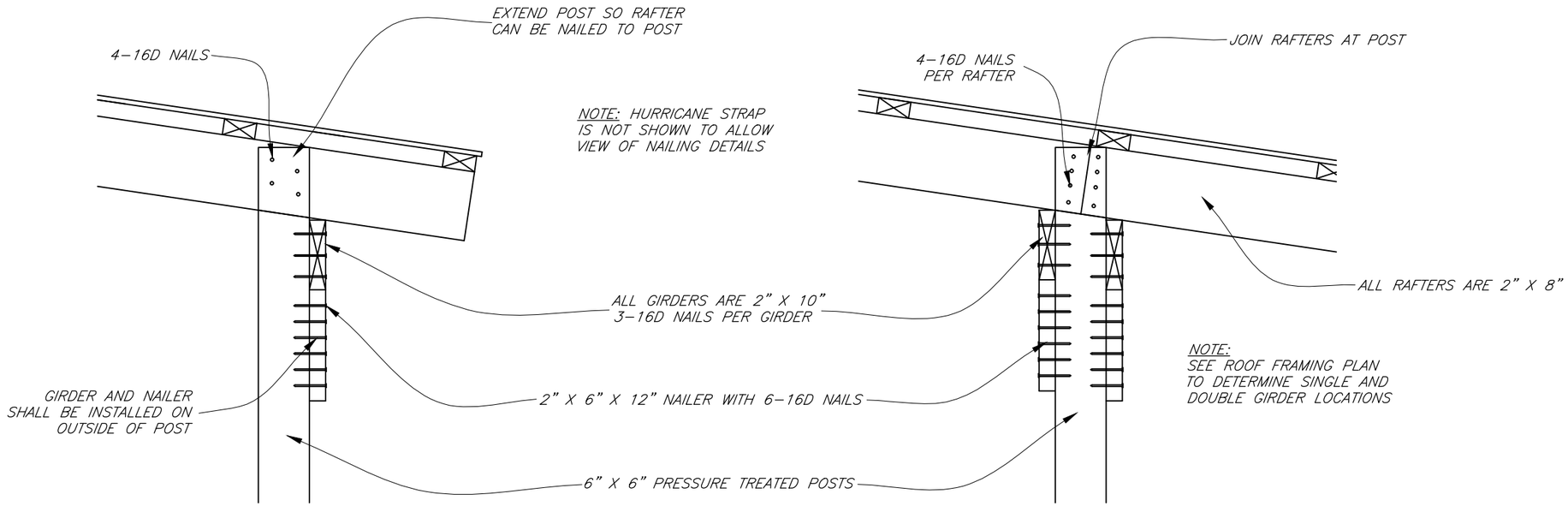

SINGLE GIRDER

DOUBLE GIRDER

GIRDER AND RAFTER TO POST CONNECTIONS

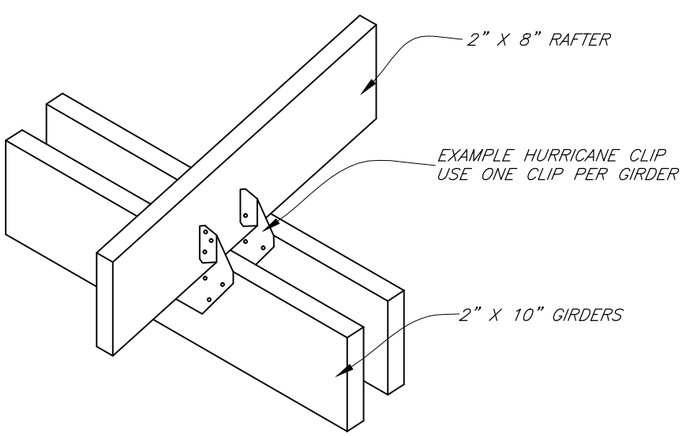

HURRICANE CLIP
(USE AT RAFTER TO GIRDER CONNECTIONS WITHOUT POSTS)

NOTES:

1. MINIMUM UPLIFT RESISTANCE FOR HURRICANE STRAP IS 746 LBS.
2. STRAP SHALL BE 2" OR WIDER. CENTER STRAP ON RAFTER TO RAFTER BUTT JOINTS ON CENTER POSTS.
3. USE MANUFACTURED HURRICANE CLIP FOR RAFTER TO GIRDER CONNECTIONS (WITHOUT POSTS). MINIMUM UPLIFT RESISTANCE IS 251 LBS PER CLIP. AN EXAMPLE IS SHOWN AT LEFT. INSTALL ACCORDING TO MANUFACTURER'S SPECIFICATIONS.

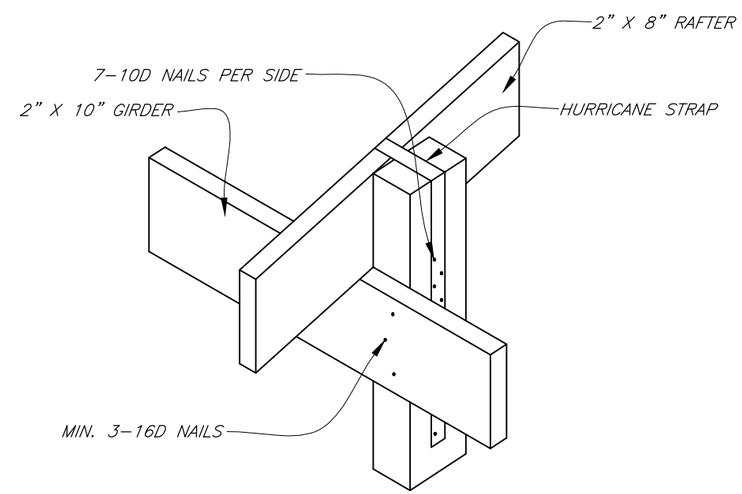

HURRICANE STRAP
(USE AT RAFTER TO GIRDER CONNECTIONS WITH POSTS)

REVISIONS		
DATE	APPROVED	TITLE
09/05	H MCFARLAND	STATE ENGINEER
01/06	H MCFARLAND	STATE ENGINEER
09/07	H MCFARLAND	STATE ENGINEER

		Date
Designed	W. Brown	09/07
Drawn	S. Rogers	09/07
Checked	H. McFarland / J. Holloway	09/07
Approved	H. McFarland	09/07

GEORGIA COMPOSTING FACILITY
(Stand Alone Structure with Standard Bins)

_____ County, GA

NRCS
Natural Resources Conservation Service
United States Department of Agriculture

File No.
ga-eng-317-c2_rev_072013

Drawing No.
Detail 1

July 2013

Sheet 4 of 5

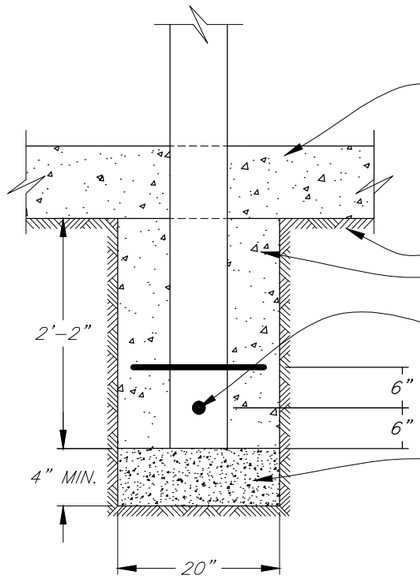

CONCRETE POST FOOTING DETAIL

4" SLAB

GROUND SURFACE

CONCRETE CASING AROUND POST

15" X NO.4 HOT DIPPED GALVANIZED OR EPOXY COATED REBAR OR 15" X 1/2" HOT DIPPED GALVANIZED THREADED ROD

CONCRETE OR GRAVEL FOOTING PAD

CONCRETE QUANTITY PER POST HOLE:

4" X 6"	0.19 C.Y.
6" X 6"	0.20 C.Y.

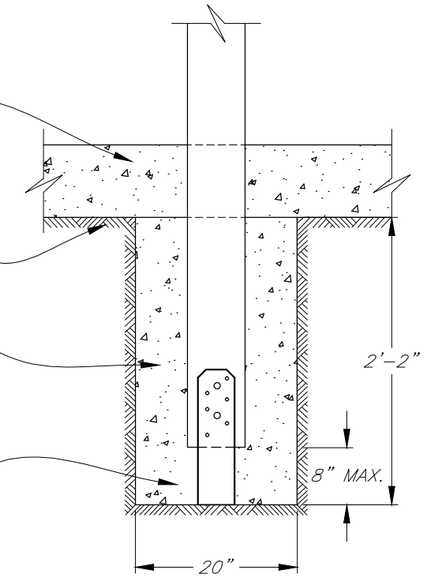

MECHANICAL POST ANCHOR CONCRETE FOOTING DETAIL

NOTES:

1. EXAMPLE CONNECTOR SHOWN AT LEFT.
2. MINIMUM UPLIFT RESISTANCE REQUIRED IS 1574 LBS.
3. INSTALL ACCORDING TO MANUFACTURER'S SPECIFICATIONS.
4. CONNECTOR SHALL BE GALVANIZED.
5. MECHANICAL POST ANCHOR MAY BE USED INSTEAD OF REBAR.
6. REBAR OR MECHANICAL POST ANCHOR REQUIRED FOR FULL POSTS ONLY.

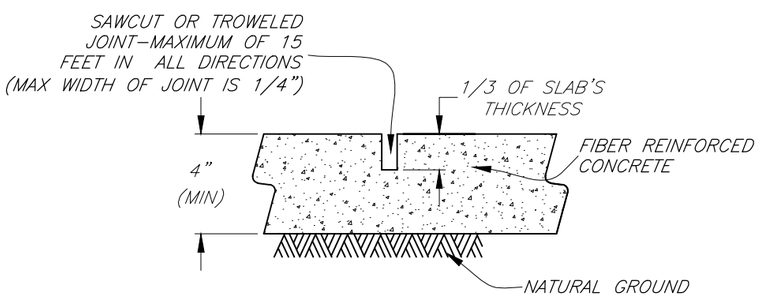

FIBER REINFORCED CONTRACTION JOINT

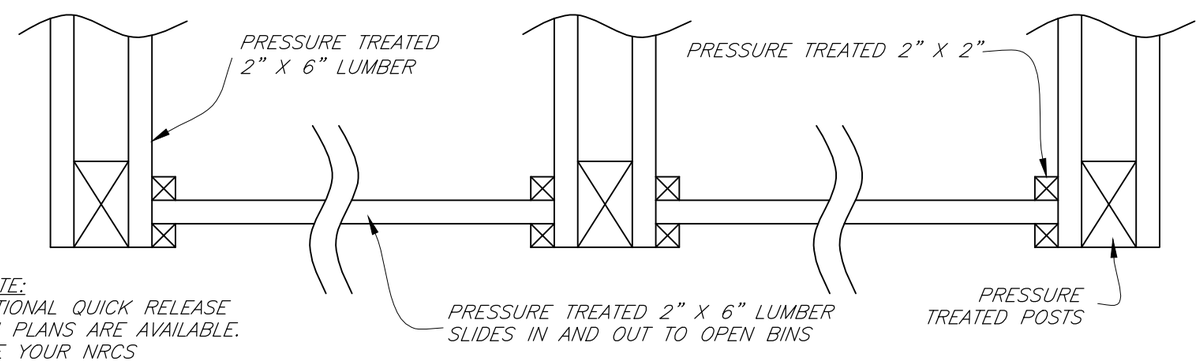

NOTE:
OPTIONAL QUICK RELEASE BIN PLANS ARE AVAILABLE. SEE YOUR NRCS REPRESENTATIVE FOR DETAILS.

STANDARD BIN FRONT - TOP VIEW

WOOD TREATMENT TABLE

MINIMUM RETENTION RATES IN PCF					
USE	CCA	ACQ-C/D	CBA-A	CA-B	MCA
GROUND CONTACT OR FRESH WATER	0.40	0.40	0.41	0.21	0.15
IMPORTANT STRUCTURAL MEMBERS	0.60	0.60	0.61	0.31	0.23

CCA - CHROMATED COPPER ARSENATE
ACQ-C/D - ALKALINE COPPER QUATERNARY
CBA-A & CA-B - COPPER AZOLE
MCA - MICRONIZED COPPER AZOLE

NOTES:

1. ALL WOODEN WALLS, HALF POSTS, AND BIN FRONT WOOD SHALL MEET THE GROUND CONTACT RATES.
2. ALL SUPPORT POSTS SHALL MEET THE IMPORTANT STRUCTURAL MEMBER RATES.

REVISIONS

DATE	APPROVED	TITLE
09/05	H MCFARLAND	STATE ENGINEER
01/06	H MCFARLAND	STATE ENGINEER
09/07	H MCFARLAND	STATE ENGINEER
10/10	J HOLLOWAY	STATE ENGINEER

		Date
Designed	W. Brown	09/07
Drawn	S. Rogers	09/07
Checked	H. McFarland / J. Holloway	09/07
Approved	H. McFarland	09/07

GEORGIA COMPOSTING FACILITY
(Stand Alone Structure with Standard Bins)

_____ County, GA

NRCS
Natural Resources Conservation Service
United States Department of Agriculture

File No.
ga-eng-317-c2_rev_072013

Drawing No.
Detail 2

July 2013

Sheet 5 of 5