DITCH PLUG SPECIFICATIONS

WING DIKE:

TOTAL LENGTH = ____ ft

TOP WIDTH = *10* ft

DITCH PLUG:

TOTAL LENGTH = ____ ft

TOP WIDTH = ____ ft

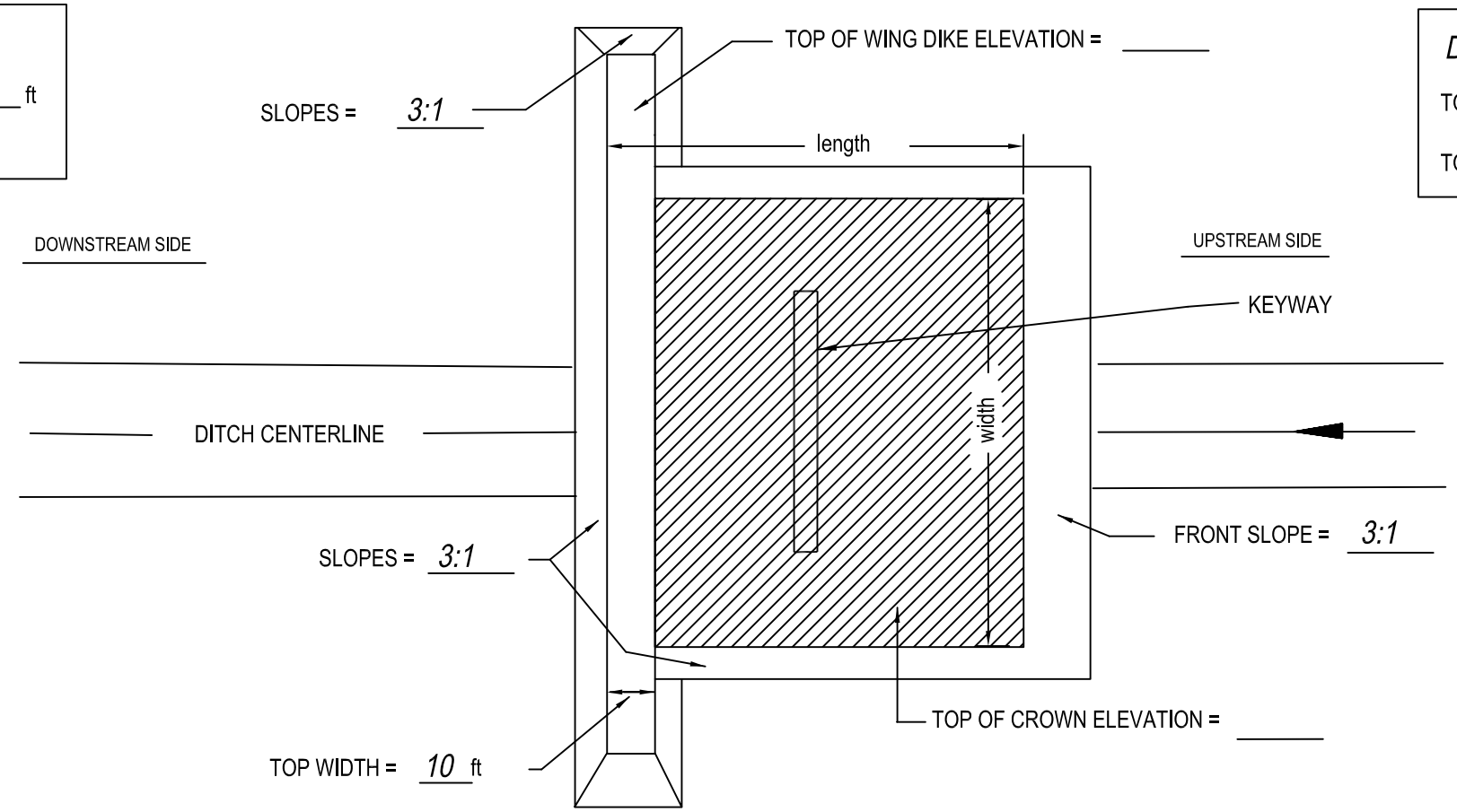

PLAN VIEW

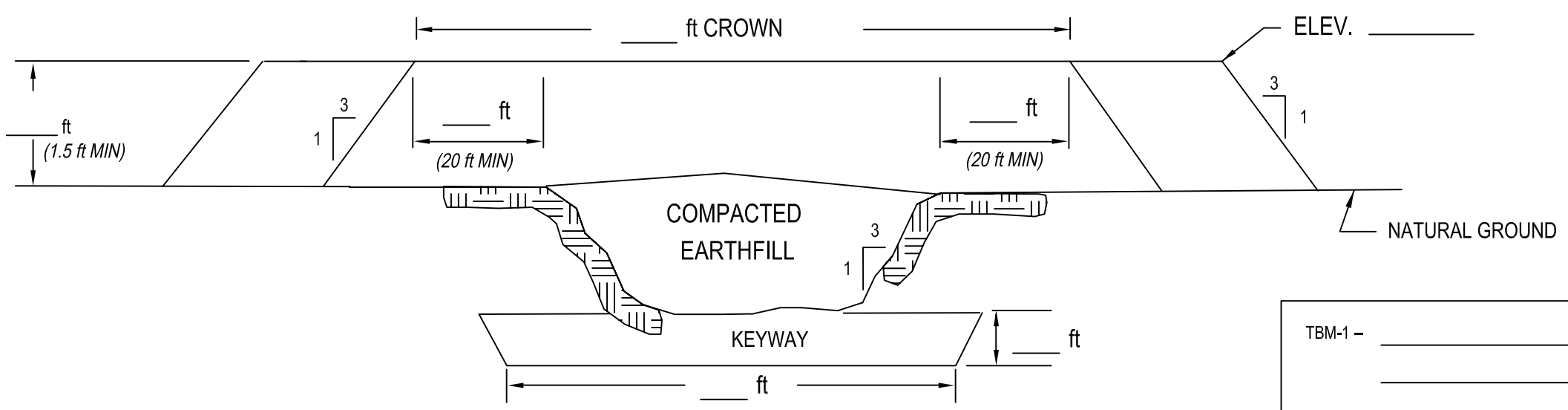

CROSS SECTION - FRONT VIEW

TBM-1 – _____

_____

_____

Elevation = _____

Drawing adapted from South Carolina WRPplug.dwg

REVISIONS		
DATE	APPROVED	TITLE

Date

Designed

Drawn

Checked

Approved

____ COUNTY, GEORGIA

____ DETAIL SHEET - DITCH PLUG and WING DIKE

NRCS
Natural Resources Conservation Service
United States Department of Agriculture

File Name
WRPplug.dwg

Drawing Name
Wetland Ditch Plug

00/00/00 00:00

Sheet 1 of 1