CONSTRUCTION INSPECTION ITEMS FOR THIS DESIGN ARE CONTAINED IN "GUIDE FOR DESIGN AND CONSTRUCTION OF CONSERVATION PRACTICES"

TANK FILL PORTS SHALL BE COLORED AS FOLLOWS:

DIESEL FUEL – YELLOW
GASOLINE – RED
KEROSENE – BROWN

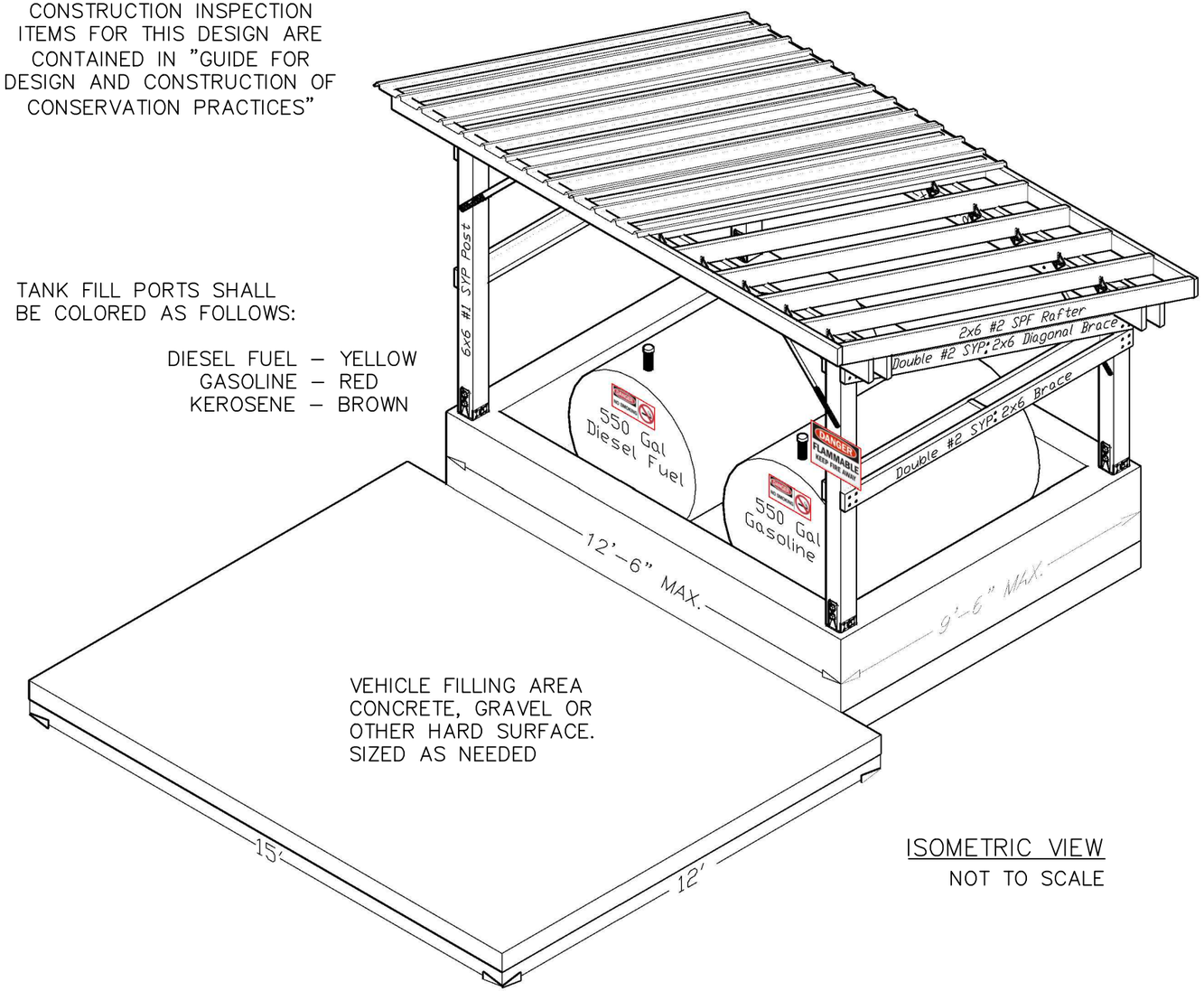

ISOMETRIC VIEW
NOT TO SCALE

DESIGN ASSUMPTIONS

GROUND SNOW LOAD:	60 PSF
EXPOSURE CATEGORY	1.2
THERMAL FACTOR:	1.2
IMPORTANCE FACTOR:	0.8
SLOPE FACTOR:	0.9
TERRAIN CATEGORY	"B" (WOODED TERRAIN, OR OBSTRUCTIONS)
ROOF EXPOSURE:	SHELTERED
BASIC WIND SPEED:	90 MPH
BUILDING TYPE:	OPEN
IMPORTANCE FACTOR:	0.87
EXPOSURE CATEGORY:	"C" (OPEN TERRAIN W/ SCATTERED OBSTRUCTIONS)
GUST FACTOR:	0.85
EXPOSURE COEF., K_z:	0.90
TOPOGRAPHIC FACTOR, K_{zt}:	1.0 (NO ESCARPMENT, 2D RIDGE OR 3D HILL)
DIRECTIONALITY FACTOR, K_d:	0.85
ROOF DEAD LOAD:	5 PSF
ROOF LIVE LOAD:	20 PSF
MIN. REQUIRED SOIL BEARING:	2000 PSF

FASTENERS

FASTENERS	– BOLTS, LAGS	f_{yb}=45,000 PSI MIN. (ANSI/ASME B18.2.1) ASTM A307 GRADE A OR SAE J429 GRADE 1
	– RING SHANKED NAILS	f_{yb}=115,000 PSI MIN. ASTM F1667–05 FOR ENGINEERED CONSTRUCTION
	–COMMON NAILS	f_{yb}=90,000 PSI MIN. ASTM F1667–05 FOR ENGINEERED CONSTRUCTION

ALL NAILS SHALL BE HOT DIP GALVANIZED – MEETING ASTM A153–09 CLASS D
ALL BOLTS, LAGS, NUTS & WASHERS – MEETING ASTM A153–09 CLASS C (OR ASTM F2329–05)

STRUCTURAL NOTES

- ALL CONNECTIONS SHALL BE AS SHOWN. IF SPLITTING OCCURS WITH NAILS THEN PREBORE HOLES UP TO 75% OF THE NAIL DIAMETER.
- ALL BOLT HOLES SHALL BE A MAXIMUM $\frac{1}{16}$" LARGER THAN THE BOLT DIAMETER, ACCURATELY PLACED AND CUT CLEANLY WITH A SHARP BIT. STANDARD CUT WASHERS SHALL BE USED ON BOTH ENDS OF THE BOLT.
- ALL PRESSURE TREATED LUMBER SHALL BE TREATED WITH A MIN. OF 0.40 PCF OF CCA, 0.06 PCF OF CuN (COPPER NAPHTHENATE) OR 0.40 PCF OF ACQ, MEETING AWPA U1 STANDARD FOR USE CATEGORY UC4A. OTHER PRESERVATIVES MEETING THIS STANDARD ARE ALSO ACCEPTABLE.

GENERAL NOTES

- A MINIMUM OF ONE "NO SMOKING" SIGN SHALL BE INSTALLED NEAR THE FUELING AREA
- TANKS SHALL HAVE A MINIMUM WALL THICKNESS OF 12 ga.
- AGRICULTURAL TANKS DO NOT HAVE TO BE VAULTED OR HAVE A FIRE SHIELD RATING
- IT IS RECOMMENDED THAT THE LANDOWNER CONTACT THEIR INSURANCE PROVIDER FOR ANY SPECIFIC REQUIREMENTS OF THEIR POLICY.
- IT IS THE LANDOWNERS RESPONSIBILITY TO INSURE TANKS WILL FIT INTO THE STRUCTURE

NO.	DATE	DESCRIPTION	BY
1	2–3–12	INITIAL DESIGN	TKJ
2	4–19–12	SIGNS, NO SMOKING	TKJ
3	6–20–12	GENERAL NOTES	TKJ
4	9–28–12	WATERSTOP TO VINYL	TKJ

Designed TATE JEFFREY Date 1/12
Drawn TATE JEFFREY 2/12
Checked BOB THOMPSON 6/12
Approved by 6/12

NRCS
Natural Resources Conservation Service
United States Department of Agriculture

HAZARD CLASS LOW
JOB CLASS V

VERMONT

2–550 GAL OR 1–1000 GAL
SECONDARY CONFINEMENT FACILITY
COVER SHEET

File Name
Drawing Name

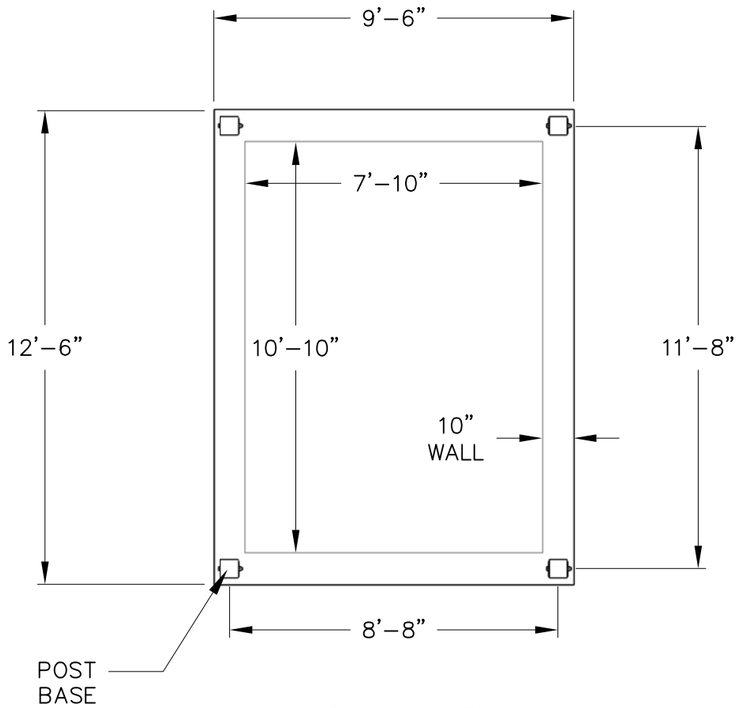

PLAN VIEW
SCALE $\frac{1}{4}$" = 1'–0"

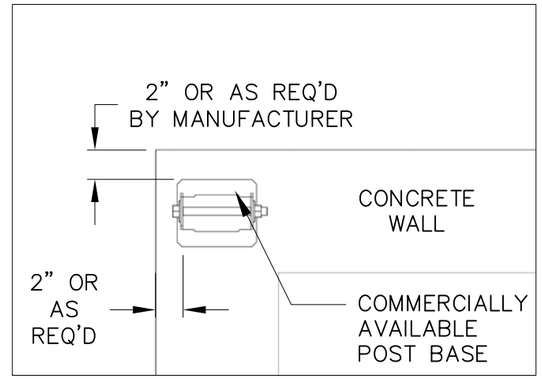

POST BASE
TOP VIEW

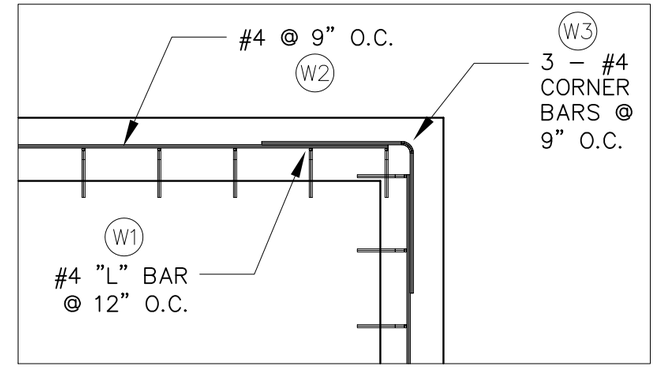

CORNER DETAIL
TOP VIEW – SCALE $\frac{1}{2}$" = 1'–0"

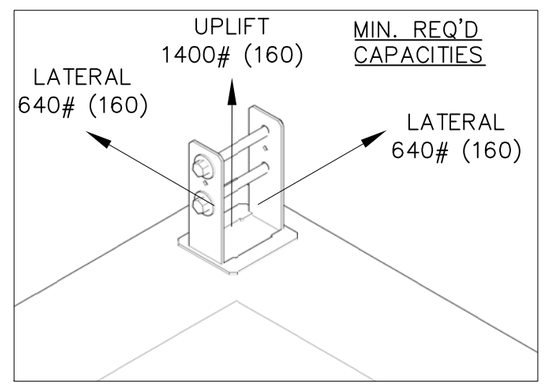

ISOMETRIC
POST BASE

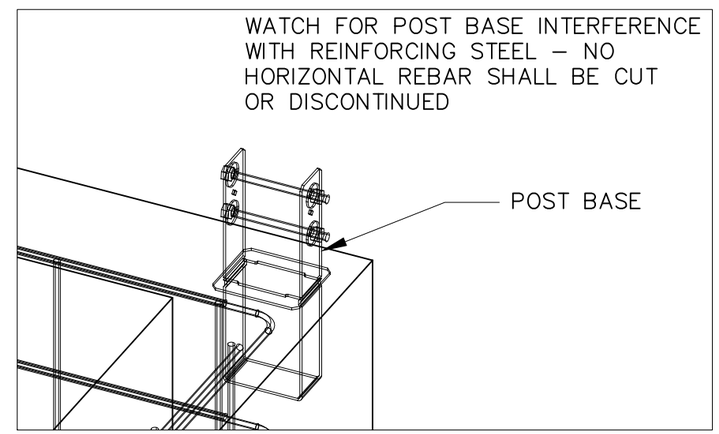

POST BASE
ISOMETRIC

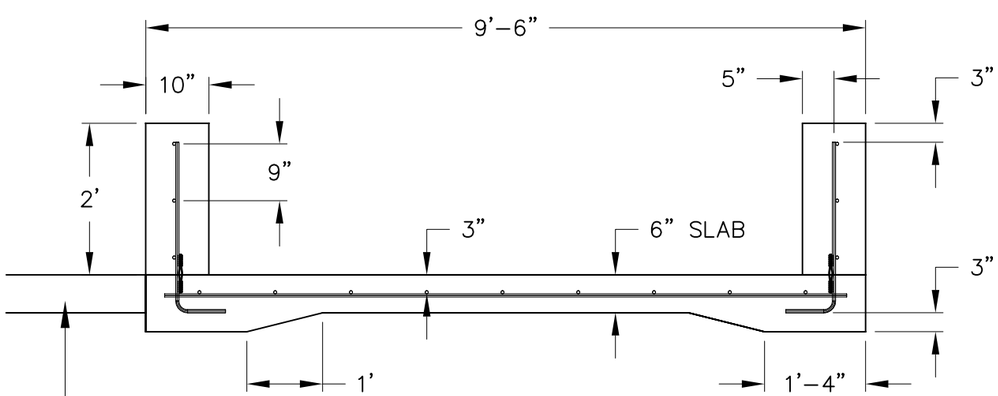

END VIEW
SCALE $\frac{1}{2}$" = 1'–0"

VINYL WATERSTOP SHALL BE
WELDED WITH THE PROPER TOOL.

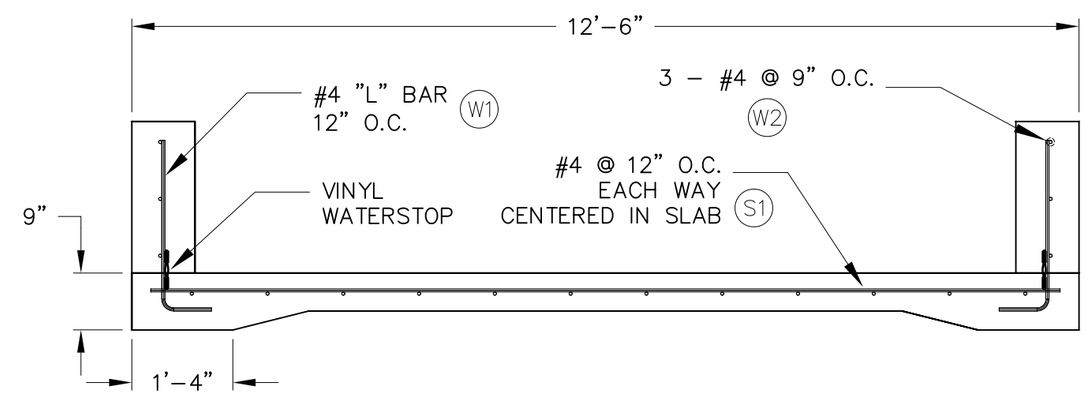

SIDE VIEW
SCALE $\frac{1}{2}$" = 1'–0"

		Date
Designed	TATE JEFFREY	1/12
Drawn	TATE JEFFREY	2/12
Checked	BOB THOMPSON	6/12
Approved by		6/12

NRCS
Natural Resources Conservation Service
United States Department of Agriculture

HAZARD CLASS LOW

JOB CLASS V

VERMONT

2–550 GAL OR 1–1000 GAL
SECONDARY CONFINEMENT FACILITY
CONCRETE DETAILS

File Name

Drawing Name

Sheet 2 of 5

CONCRETE WALL CONSTRUCTION NOTES

1. ALL FILL THAT SHALL HAVE CONCRETE PLACED ON IT SHALL BE CLASS II COMPACTION AS SPECIFIED IN CONSTRUCTION SPECIFICATION #11, "EARTHWORK".
2. ALL CONCRETE FORMWORK & REINFORCEMENT SHALL BE INSPECTED BY A REPRESENTATIVE OF THE NRCS PRIOR TO THE PLACEMENT OF CONCRETE.
3. ALL CONCRETE & REINFORCING SHALL BE INSTALLED ACCORDING TO NRCS CONSTRUCTION SPECIFICATION #31, "STRUCTURAL CONCRETE, NONSTRUCTURAL CONCRETE BASE SLABS & STEEL REINFORCEMENT".
4. ALL REINFORCING STEEL SHALL BE GRADE 60.
5. ALL REINFORCING SHALL BE IN PLACE PRIOR TO CONCRETE PLACEMENT. (NO PLUNKING)
6. ALL REINFORCING SHALL HAVE THE MINIMUM CLEAR COVER AS SHOWN ON THE DRAWINGS.
7. ALL CONCRETE SHALL BE AN NRCS APPROVED MIX, WITH 5 TO 7 PERCENT AIR CONTENT AND PLACED AT A SLUMP BETWEEN 3 TO 5 INCHES. CONCRETE SHALL HAVE A MINIMUM COMPRESSIVE 28 DAY STRENGTH OF 4000 PSI.
8. SUPER PLASTICIZERS, WATER REDUCING ADMIXTURES NON CHLORIDE ACCELERANTS ARE PERMISSIBLE. SEE CONSTRUCTION SPECIFICATION #31.
9. BENTONITE OR PVC TYPE WATERSTOP SHALL BE INSTALLED AS SHOWN ON THE DRAWINGS. MINIMUM CONCRETE COVER OVER WATERSTOP SHALL BE 3" OR MANUFACTURER'S RECOMMENDED MINIMUM COVER, WHICHEVER IS GREATER.
10. CONCRETE FORM OIL SHALL BE APPLIED TO THE FORMS PRIOR TO ERECTION. FORM OIL SHALL NOT BE APPLIED TO THE FORMS ONCE REINFORCING IS IN PLACE. (NO FORM OIL ON REINFORCING)
11. NO CONCRETE SHALL BE PLACED WHEN THE MINIMUM DAILY ATMOSPHERIC TEMPERATURE IS LESS THAN 40 DEGREES FAHRENHEIT. UNLESS COLD WEATHER CONCRETING PRACTICES ARE FOLLOWED. CONCRETE SHALL BE PROTECTED FROM FREEZING FOR 7 DAYS.
12. CONCRETE SHALL NOT BE PLACED WHEN THE DAILY MAXIMUM TEMPERATURE IS EXPECTED TO BE GREATER THAN 90 DEGREES.
13. ALL CONCRETE SHALL BE PLACED WITHIN 90 MINUTES OF THE INTRODUCTION OF CEMENT TO THE MIXTURE, OTHERWISE A SET RETARDING ADMIXTURE SHALL BE USED.
14. CONCRETE FORMS SHALL BE REMOVED ONLY AFTER A MINIMUM OF 12 HOURS HAVE ELAPSED SINCE THE COMPLETION OF THE CONCRETE PLACEMENT. BACKFILLING OPERATIONS SHALL NOT COMMENCE UNTIL A MINIMUM OF 7 DAYS SINCE THE COMPLETION OF THE POUR.
15. CONCRETE SHALL BE CURED FOR A MINIMUM OF 7 DAYS BY THE USE OF A CURING COMPOUND, SATURATED COVER MATERIAL OR FREQUENT APPLICATION OF WATER.
16. TIEHOLES ON BOTH SIDES OF THE WALL SHALL BE PATCHED WITH A HYDRAULIC CEMENT.
17. ALL DISTURBED AREAS SHALL BE FERTILIZED, SEEDED, AND MULCHED ACCORDING TO VT NRCS CONSTRUCTION SPECIFICATION #52, "SEEDING".

DESIGN ASSUMPTIONS

1. DESIGN BASED FINITE ELEMENT ANALYSIS
2. MINIMUM SOIL BEARING STRENGTH 2,000 PSF
3. MAX. BACKFILL IS 1', LOW PLASTIC CLAY OR SILT
4. EQUIVALENT FLUID PRESSURE = 75 PSF (FRAME TANK)
5. SURCHARGE OF 100 PSF INCLUDED
6. GRADE 60 STEEL FOR REBAR
7. 3000 PSI CONCRETE STRENGTH

SPLICES NOT SHOWN IN DETAILS ARE NOT INCLUDED IN TOTAL LENGTH.

USE 18" SPLICE LENGTH FOR #4 BARS
USE 22" SPLICE LENGTH FOR #5 BARS

STEEL SCHEDULE

LOCATION	BAR SIZE	SPACING	LENGTH FT–IN	QUANTITY	TOTAL LENGTH FT–IN
S1	#4	12"	–	–	117'
W1	#4	12"	2'–10"	42	153'
W2	#4	9"	VARIES	12	115'
W3	#4	9"	4'–3"	12	51'

BAR DETAILS

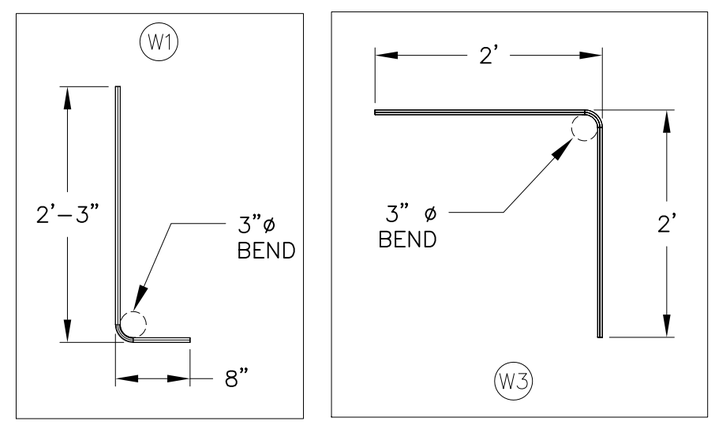

ESTIMATED CONCRETE QUANTITIES

ITEM	QUANTITY	UNIT	CONSTRUCTION SPEC.
CONCRETE SLAB/FOOTING	2.9	C.Y.	31
CONCRETE CURB	2.5	C.Y.	31
CONCRETE FILLING AREA	3.4	C.Y.	31

Designed TATE JEFFREY 1/12
Drawn TATE JEFFREY 2/12
Checked BOB THOMPSON 6/12
Approved by 6/12

NRCS
Natural Resources Conservation Service
United States Department of Agriculture

HAZARD CLASS LOW
JOB CLASS V

VERMONT

2–550 GAL OR 1–1000 GAL
SECONDARY CONFINEMENT FACILITY
CONCRETE DETAILS

File Name
Drawing Name

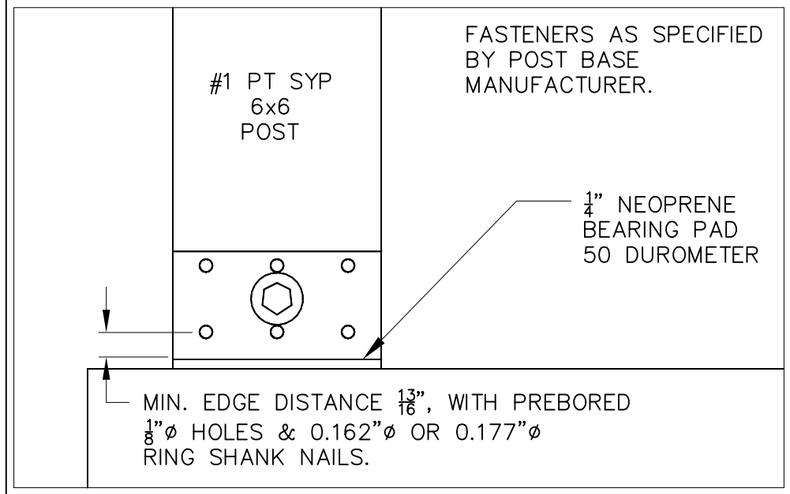

POST CONNECTION
SCALE 3" = 1'–0"

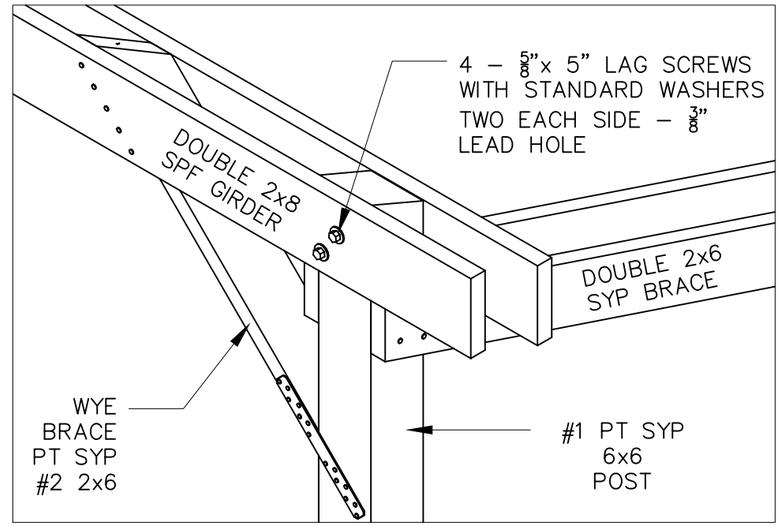

GIRDER CONNECTION
ISOMETRIC

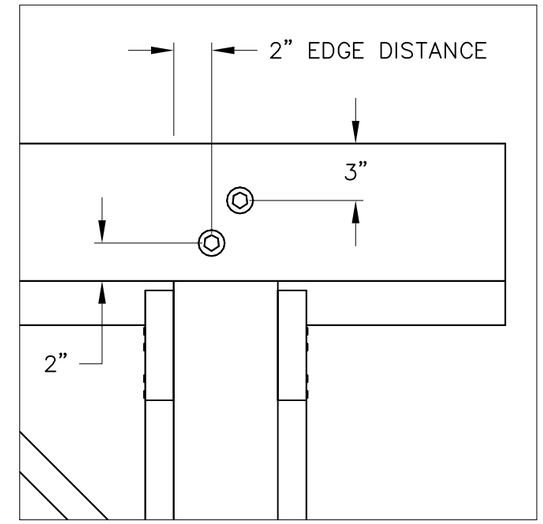

GIRDER CONNECTION
SCALE 1 1/2" = 1'–0"

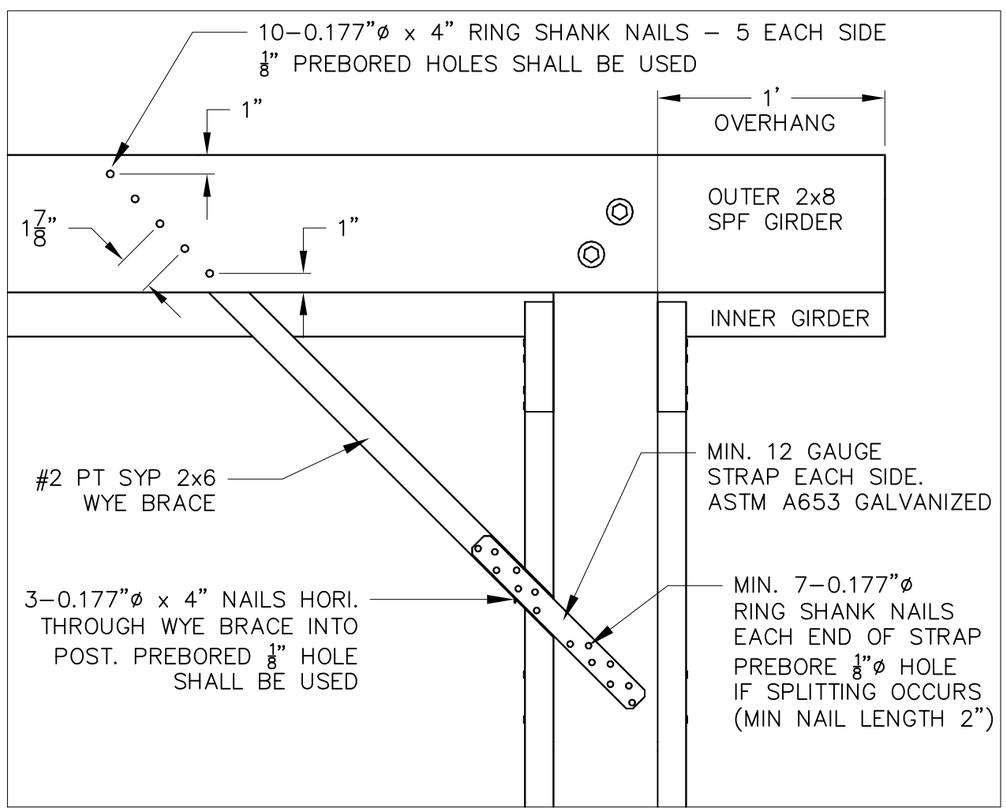

GIRDER CONNECTION
SCALE 1 1/2" = 1'–0"

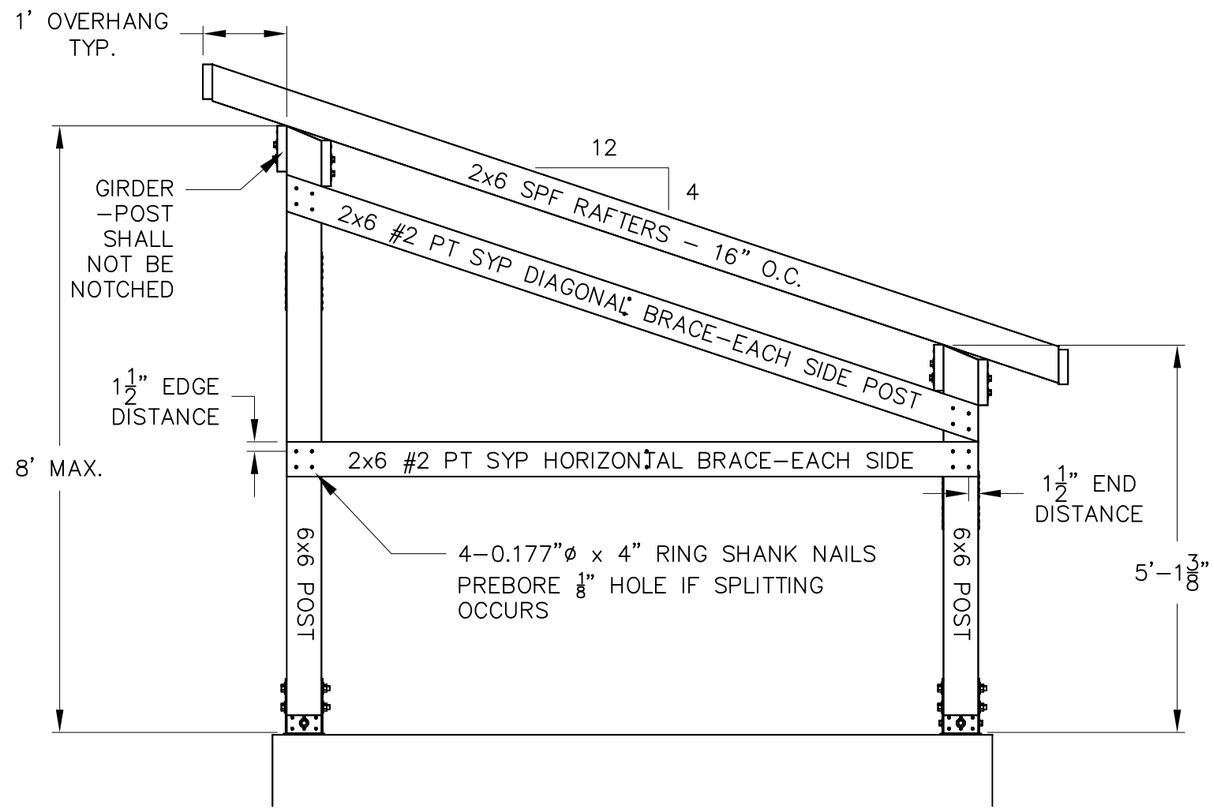

BRACE CONNECTIONS
SCALE 1 1/2" = 1'–0"

		Date
Designed	TATE JEFFREY	1/12
Drawn	TATE JEFFREY	2/12
Checked	BOB THOMPSON	6/12
Approved by		6/12

NRCS
Natural Resources Conservation Service
United States Department of Agriculture

HAZARD CLASS
LOW

JOB CLASS
V

VERMONT

2–550 GAL OR 1–1000 GAL
SECONDARY CONFINEMENT FACILITY
WOOD CONNECTIONS

File Name

Drawing Name

Sheet 4 of 5

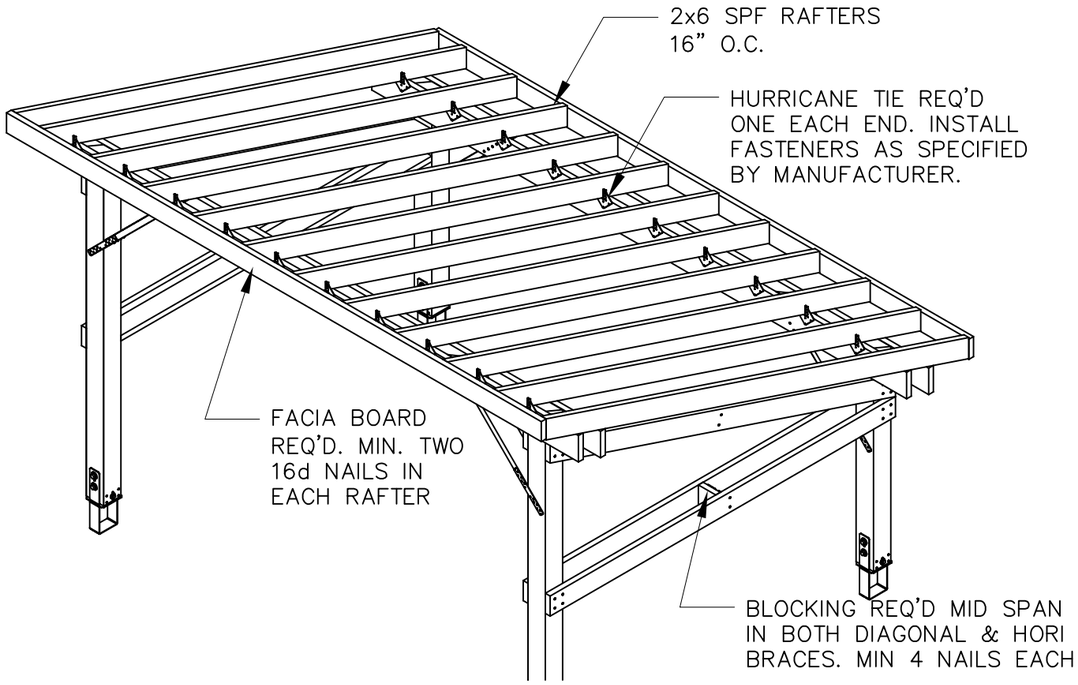

RAFTER TIES

ISOMETRIC

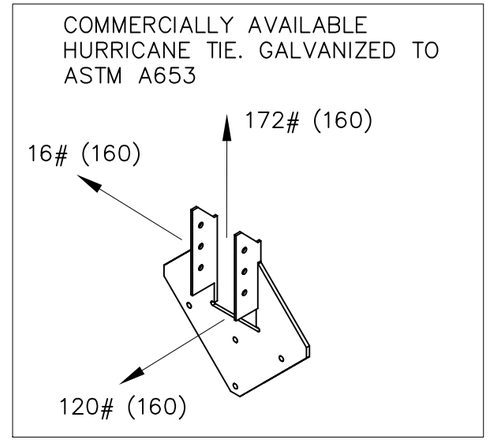

RAFTER TIES

MIN. CAPACITIES

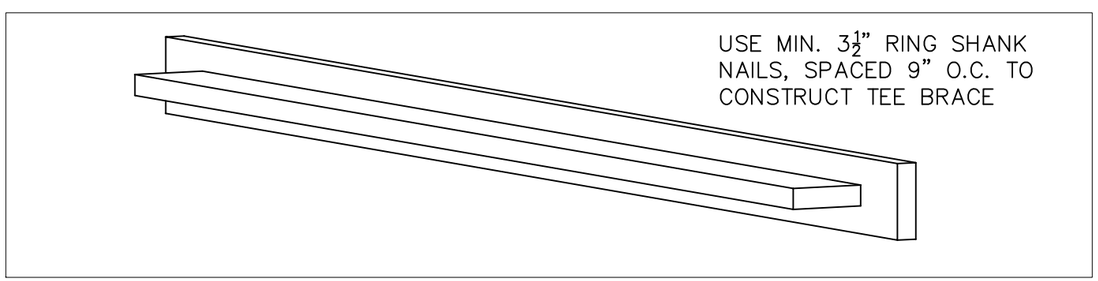

OPTIONAL BRACE CONSTRUCTION

BLOCKING NOT REQUIRED

MEMBER LIST

DESCRIPTION	TREATMENT	MEMBER	LENGTH	QTY	TOTAL LENGTH	SPECIES AND GRADE
POSTS	PT	6x6	VARIES	4	318'	SOUTHERN YELLOW PINE (SYP) #1 OR BETTER
POST BASE	GALV	–	–	4	–	COMMERCIALLY AVAILABLE – GALVANIZED ASTM A653
BEARING PAD	–	–	–	4	4	NEOPRENE PAD, ¼" THICK, 50 DUROMETER
GIRDER	KD	2–2x8	14'	2	56'	SPRUCE PINE FIR (SPF) #1 OR BETTER
WYE BRACE	PT	2x6	3'	4	12'	SOUTHERN YELLOW PINE (SYP) #2 OR BETTER
WYE BRACE SINGLE STRAP	GALV.	–	–	8	–	12 ga. MIN. – GALVANIZED ASTM A653
HORIZONTAL BRACE	PT	2–2x6	9'–1½"	2	36'–6"	SOUTHERN YELLOW PINE (SYP) #2 OR BETTER
DIAGONAL BRACE	PT	2–2X6	9'–9¼"	2	40'	SOUTHERN YELLOW PINE (SYP) #2 OR BETTER
ROOF RAFTERS	KD	2x6	11'–3¾"	12	135'–9"'	SPRUCE PINE FIR (SPF) #1 OR BETTER
ROOFING	–	–	–	–	163 SF	–

Designed TATE JEFFREY Date 1/12
Drawn TATE JEFFREY 2/12
Checked BOB THOMPSON 6/12
Approved by 6/12

NRCS
Natural Resources Conservation Service
United States Department of Agriculture

HAZARD CLASS LOW

JOB CLASS V

2–550 GAL OR 1–1000 GAL
SECONDARY CONFINEMENT FACILITY
WOOD CONNECTIONS & QUANTITIES

VERMONT

File Name

Drawing Name

Sheet 5 of 5