RESET

PRINT

CONSTRUCTION NOTES

GENERAL NOTES

1. ALL ITEMS SHALL BE CONSTRUCTED TO THE DIMENSIONS AND ELEVATIONS SHOWN ON THE DRAWINGS. ANY CHANGES SHALL BE APPROVED BY THE NRCS REPRESENTATIVE ON SITE.
2. ALL PERMITS, EASEMENTS, AND RIGHTS OF WAY ARE THE RESPONSIBILITY OF THE LANDOWNER.
3. IT IS THE EXCAVATION CONTRACTORS RESPONSIBILITY TO CALL "DIG SAFE" AND TO COMPLY WITH ALL VERMONT LAWS AND REGULATIONS REGARDING THE LOCATION AND WORK AROUND UNDERGROUND UTILITIES. DIG SAFE (888) 344-7233.
4. ALL CONSTRUCTION ACTIVITIES SHALL BE DONE IN A MANNER THAT MINIMIZES SEDIMENT FROM ENTERING ANY WATER BODIES, INCLUDING DRAINAGE WAYS, SEE VT D.E.C. SEDIMENT AND EROSION CONTROL HANDBOOKS.
5. CONSTRUCTION MAY NOT BEGIN UNTIL THE CONTRACTOR, LANDOWNER, AND NRCS HAVE A PRE-CONSTRUCTION MEETING IN ORDER TO DISCUSS THE DETAILS OF THE PROJECT.
6. IT SHALL BE THE CONTRACTOR'S AND LANDOWNER'S RESPONSIBILITY TO NOTIFY NRCS AT LEAST TWO DAYS IN ADVANCE OF:
   - A. START OF CONSTRUCTION.
   - B. CONSTRUCTION OF BERM.
   - C. INSTALLATION OF PIPELINE.
7. THIS STANDARD DRAWING APPLIES ONLY TO DRAINAGE AREAS OF 20 ACRES OR LESS. PROJECTS WITH LARGER DRAINAGE AREAS SHALL REQUIRE FURTHER DESIGN REVIEW BY AN NRCS OFFICIAL WITH THE PROPER JOB APPROVAL AUTHORITY.

   PROJECT DRAINAGE ACRES = _____ ACRES

EARTHWORK NOTES

8. ALL SOD, MANURE, & ORGANIC MATTER SHALL BE REMOVED TO REVEAL CLEAN SUBGRADE. ANY TOPSOIL SHOULD BE STRIPPED AND STOCKPILED TO BE USED AS FINISH ON DISTURBED AREAS.
9. FILL SHALL NOT CONTAIN MANURE, VEGETATION, SOD, FROZEN MATERIAL, BRUSH, ROOTS, STONES LARGER THAN 6 INCHES IN DIAMETER, OR OTHER OBJECTIONABLE MATERIAL. IN ADDITION, BERM FILL MATERIAL SHALL BE FINE GRAINED (NON-GRANULAR) SOILS THAT WILL IMPOUND WATER WHEN COMPACTED.
10. FILL SHALL NOT BE PLACED ON FROZEN SURFACES.
11. FILL SHALL BE PLACED IN UNIFORM LAYERS NOT TO EXCEED 9 INCHES PRIOR TO COMPACTION.
12. THE MOISTURE CONTENT OF THE FILL SHALL BE SUFFICIENT TO OBTAIN COMPACTION.
13. COMPACTION SHALL BE ACCOMPLISHED BY THE ROUTING OF CONSTRUCTION EQUIPMENT OVER THE FILL WITH NOT LESS THAN 2 PASSES OF THE CONSTRUCTION EQUIPMENT. ONE "PASS" SHALL BE CONSIDERED SUCH THAT THE ENTIRE SURFACE OF EACH LAYER WILL BE TRAVERSED BY NOT LESS THAN 1 TRACK OF THE CONSTRUCTION EQUIPMENT.

PIPELINE NOTES:

14. THE TRENCH BOTTOM SHALL BE GROOVED TO PROVIDE SUPPORT FOR THE BOTTOM ⅓ OF THE PIPE WHEN FLEXIBLE PIPE IS INSTALLED. GRAVEL BEDDING MAY BE USED TO PROVIDE LATERAL SUPPORT FOR THE PIPE WHEN THE TRENCH BOTTOM CANNOT BE GROOVED.
15. ROUND PIPE PERFORATION SHALL BE 3⁄16". PLACE HOLES DOWN. SLOTS SHALL BE NO LONGER THAN 1-¼".
16. AS SOON AS PLACED AND INSPECTED THE PIPE SHALL BE HAND COVERED WITH LOOSE, FRIABLE MATERIAL FROM THE TRENCH SIDES OR FILTER GRAVEL TO A DEPTH OF 6" OVER THE PIPE.
17. DO NOT PUSH LARGE STONES INTO TRENCH.
18. THE OUTLET PIPE SHALL BE RIGID AND NON-PERFORATED FOR A MINIMUM OF 8 FEET. METAL PIPE SHALL BE USED IF THE HEADWALL IS CONCRETE.
19. DISCHARGE OUTLET SHALL NOT BE DIRECTLY PLACED IN AN EXISTING STREAM OR WATERCOURSE. THE PIPE OUTLET MUST DISCHARGE TO A GRASSED WATERWAY OR VEGETATED BUFFER ZONE OF NOT LESS THAN 30' FROM THE TOP OF BANK OF ANY WATERCOURSE.

FINISH WORK NOTES:

20. ALL AREAS DISTURBED BY CONSTRUCTION SHALL BE SEEDED AND MULCHED ACCORDING TO CONSTRUCTION SPECIFICATION #52.

LOCATION MAP
SCALE: _____

BILL OF MATERIALS

ITEM #	ITEM	QUANTITY	UNIT	CONSTRUCTION SPECIFICATIONS
1.	SITE PREPARATION	FOR	JOB	1, 5
2.	EARTHWORK		C.Y.	11
3.	_0.0_" CORRUGATED PLASTIC TUBING		L.F.	41
4.	_0.0_" SDR 35 PVC PIPE		L.F.	41
5.	1 ½" STONE		C.Y.	11
6.	_0.0_" PERFORATED RISER		E.A.	41
7.	SEEDING & MULCHING		ACRE	52

811 DigSafe MA·ME·NH·RI·VT

Date 1/1/2021
Designed
Drawn VT STANDARD DRAWING
Checked
Approved by

United States Department of Agriculture
Natural Resources Conservation Service

HAZARD CLASS LOW
JOB CLASS

UNDERGROUND OUTLET-PERFORATED RISER
CONSTRUCTION NOTES & BILL OF MATERIALS
VERMONT

File Name

Drawing Name
VT-620-001-2021

Sheet 1 of 4

RESET

PRINT

PLAN VIEW

PROFILE:

VERTICAL SCALE

HORIZONTAL SCALE

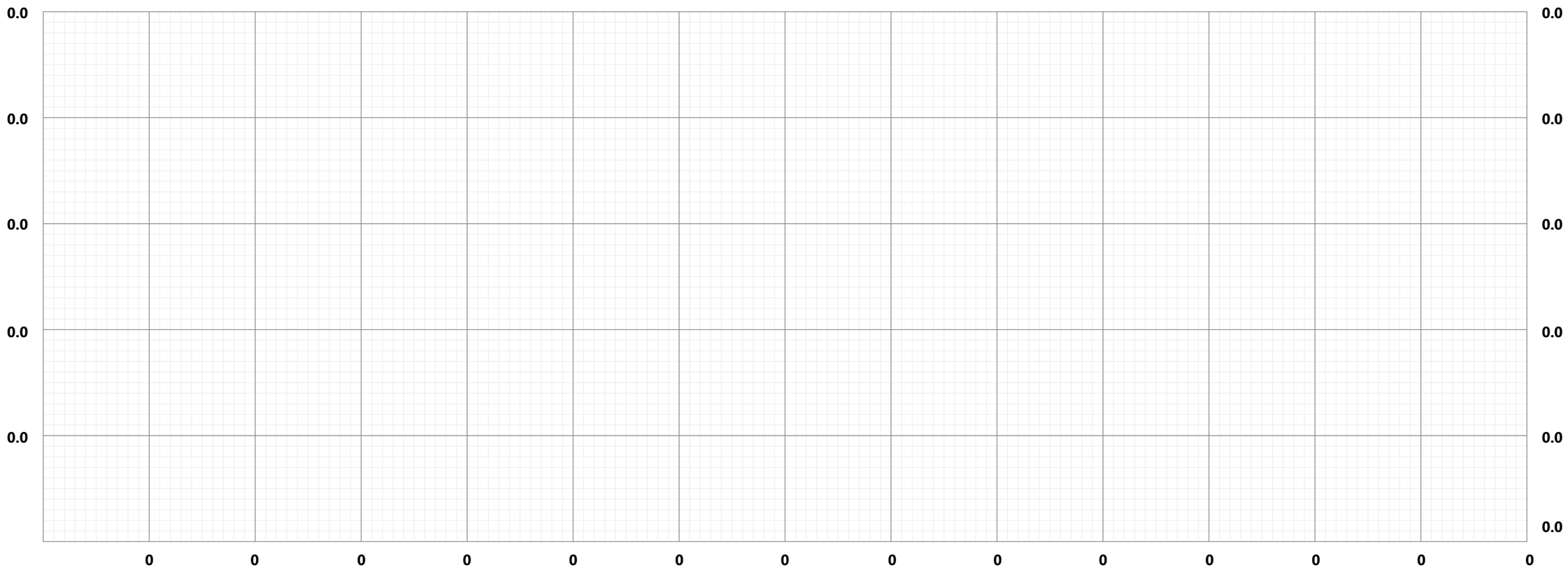

Date

Designed

Drawn VT STANDARD DRAWING 1/1/2021

Checked

Approved by

United States Department of Agriculture

Natural Resources Conservation Service

HAZARD CLASS LOW

JOB CLASS

UNDERGROUND OUTLET PLAN – PROFILE

VERMONT

File Name

Drawing Name VT–620–001–2021

Sheet 2 of 4

RESET

PRINT

UNDERGROUND OUTLET – SURFACE INLET DETAILS

(NOT TO SCALE)

PLAN VIEW

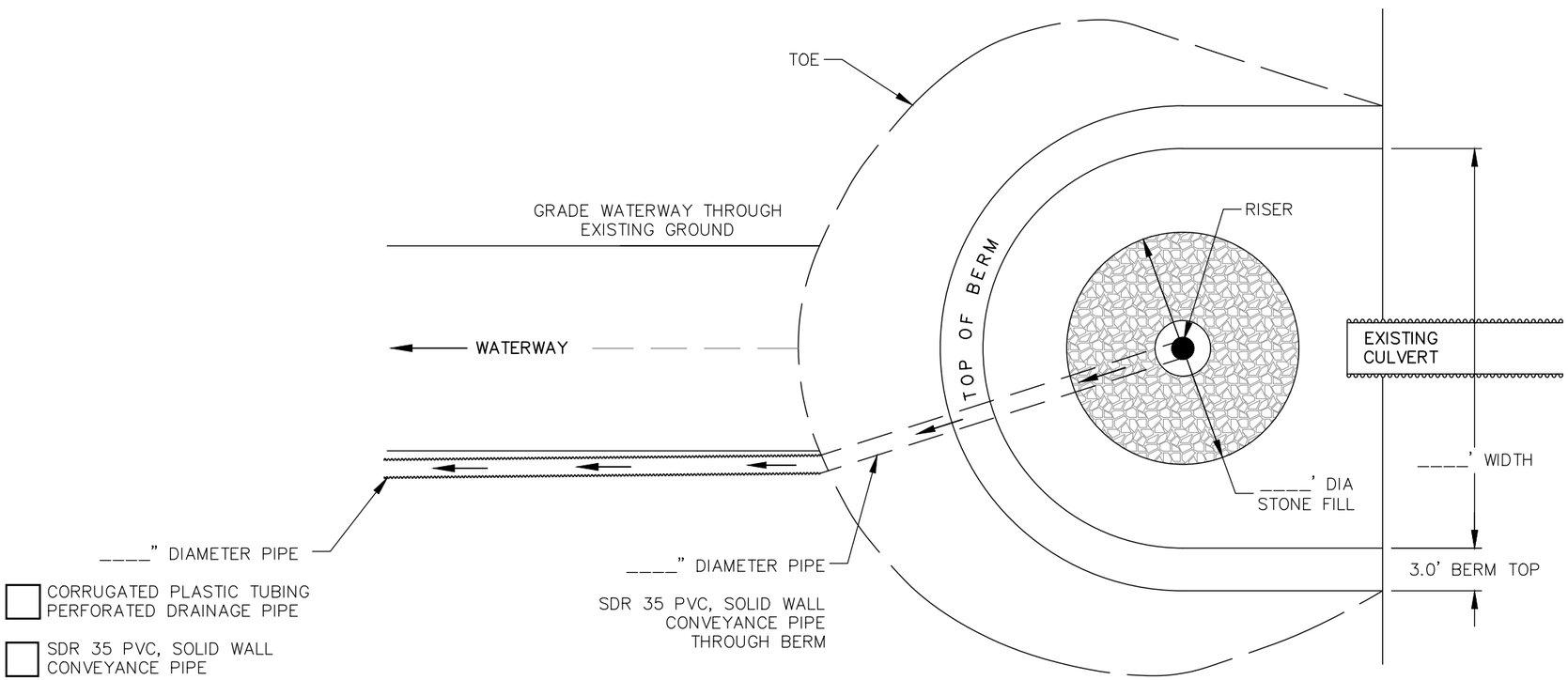

CORRUGATED PLASTIC TUBING PERFORATED DRAINAGE PIPE

SDR 35 PVC, SOLID WALL CONVEYANCE PIPE

HICKENBOTTOM STYLE RISER DESIGN NOTE:

COMMON SIZES INCLUDE

8 INCH DIA RISER W/ 112 EA 1 INCH HOLES

10 INCH DIA RISER W/ 144 EA 1 INCH HOLES

OTHER RISER DIAMETERS / PERFORATION VALUES MAY EXIST AND BE ACCEPTABLE

ELEVATION VIEW

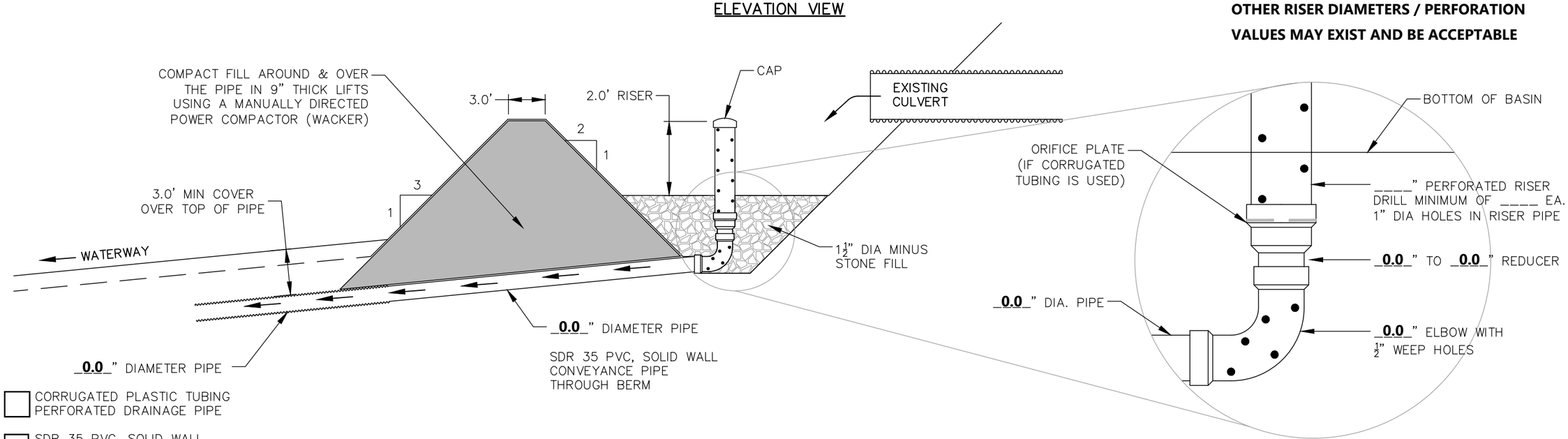

CORRUGATED PLASTIC TUBING PERFORATED DRAINAGE PIPE

SDR 35 PVC, SOLID WALL CONVEYANCE PIPE

Designed
Drawn VT STANDARD DRAWING
Date 1/1/2021
Checked
Approved by

United States Department of Agriculture
Natural Resources Conservation Service

HAZARD CLASS LOW

JOB CLASS

UNDERGROUND OUTLET–PERFORATED RISER SURFACE INLET DETAILS

VERMONT

File Name

Drawing Name VT–620–001–2021

Sheet 3 of 4

RESET

PRINT

UNDERGROUND OUTLET – PIPE OUTLET DETAILS

(NOT TO SCALE)

TYPICAL TRENCH SECTION

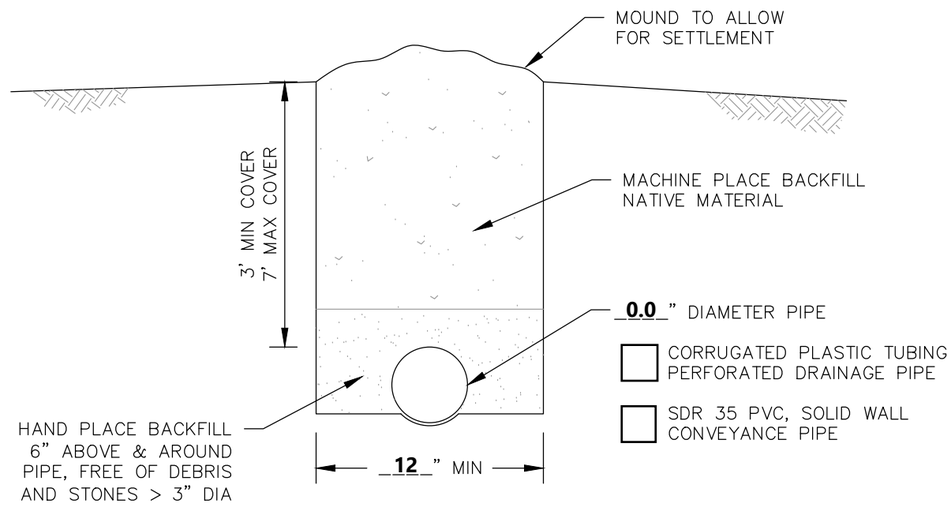

DRAIN OUTLET

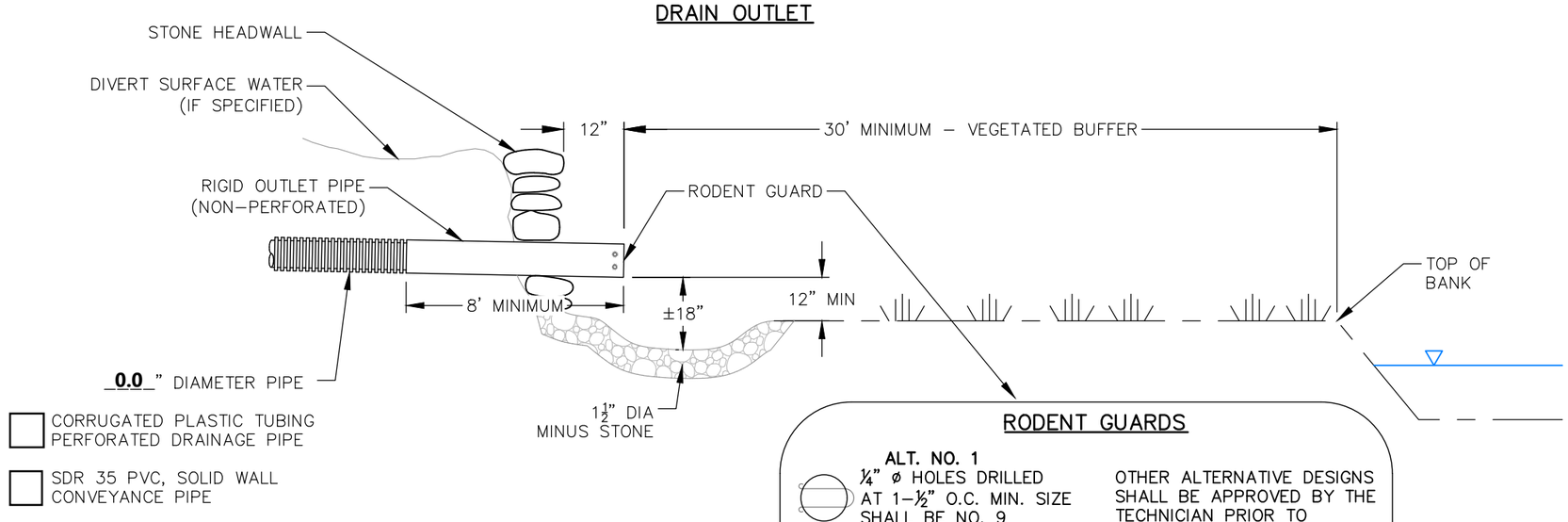

RODENT GUARDS

ALT. NO. 1
¼" ø HOLES DRILLED AT 1–½" O.C. MIN. SIZE SHALL BE NO. 9 GALVANIZED WIRE.

OTHER ALTERNATIVE DESIGNS SHALL BE APPROVED BY THE TECHNICIAN PRIOR TO INSTALLATION.

ALT. NO. 2
5/16" ø HOLES DRILLED AT 1–½" O.C. HORIZONTAL BARS SHALL BE ¼" GALVANIZED BOLTS.

PIPE DIAMETER (IN.)	NUMBER OF WIRES/BOLTS
4"	2
6"	3
8"	5

Date 1/1/2021
Designed
Drawn VT STANDARD DRAWING
Checked
Approved by

United States Department of Agriculture
Natural Resources Conservation Service

HAZARD CLASS LOW
JOB CLASS

UNDERGROUND OUTLET PIPE OUTLET DETAILS
VERMONT

File Name
Drawing Name VT–620–001–2021

Sheet 4 of 4