UNITED STATES DEPARTMENT OF AGRICULTURE
NATURAL RESOURCES CONSERVATION SERVICE

GEORGIA STANDARD DRAWINGS - 20' WIDE, STAND ALONE COMPOST FACILITY (NO ROOF) CONSTRUCTED WITH CONCRETE WALLS

1. *THE FOLLOWING DRAWINGS WERE PREPARED IN ACCORDANCE WITH PRACTICE CODE 317–COMPOSTING FACILITY.*
2. *THIS DESIGN IS APPROVED FOR OPERATIONS COMPOSTING ORGANIC MATERIALS WITHOUT LIVESTOCK AND POULTRY WASTE LOADS.*
3. *THIS DESIGN IS NOT INTENDED FOR USE WITH STRUCTURES WHERE A PERMANENTLY AFFIXED ROOF STRUCTURE IS DESIRED OR REQUIRED.*
4. *ANY CHANGES TO THESE DRAWINGS MUST BE APPROVED BY AN ENGINEER WITH JOB APPROVAL LEVEL IV OR GREATER.*

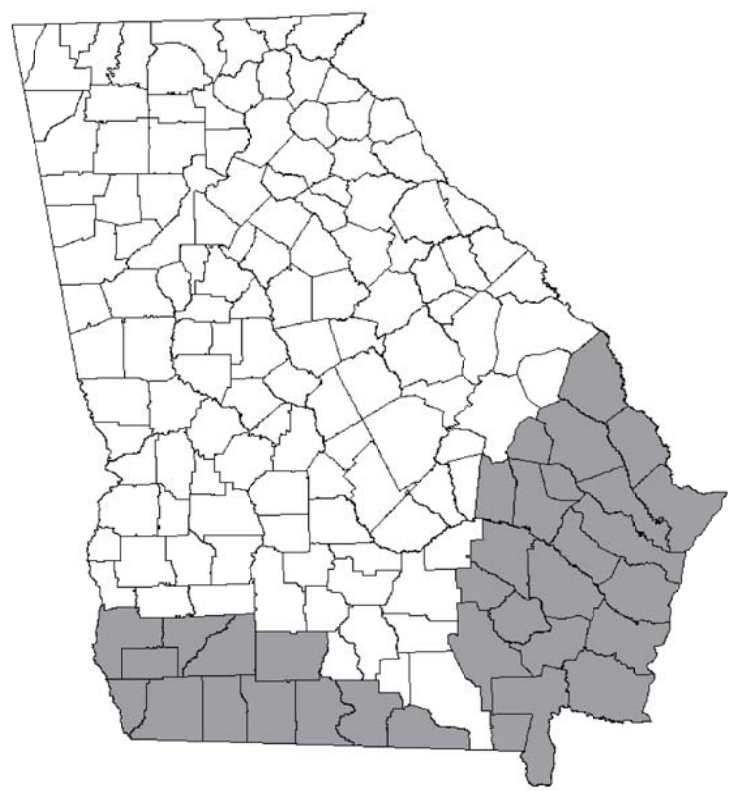

This design is intended for use in counties subject to hurricane wind loads shaded gray above. Refer to GA-ENG-317-c10 for using wood walls in all other counties.

_____ **COMPOST FACILITY**

_____ **COUNTY, GEORGIA**

INDEX TO DRAWINGS:

SHEET 1 – COVER SHEET

SHEET 2 – PLAN VIEW
ELEVATION VIEW
FRONT VIEW
GENERAL NOTES

SHEET 3 – WOOD TREATMENT TABLE
FIBER REINFORCED CONTRACTION JOINT
STANDARD BIN FRONT – TOP VIEW
STANDARD BIN FRONT – SIDE VIEW

SHEET 4 – REINFORCED CONCRETE WALL
CONCRETE CONSTRUCTION JOINT
STEEL REINFORCEMENT SCHEDULE

PRE–CONSTRUCTION CERTIFICATION:

THE _____ COMPOST FACILITY WILL BE CONSTRUCTED IN ACCORDANCE WITH THE FOLLOWING DRAWINGS AND PRACTICE CODE 317. ALL CHANGES WERE APPROVED BY AN ENGINEER WITH JOB APPROVAL AUTHORITY LEVEL IV OR GREATER.

OWNER DATE | NRCS REPRESENTATIVE DATE | ENGINEER (IF REQUIRED) DATE

AS–BUILT CERTIFICATION:

THIS PRACTICE HAS BEEN CONSTRUCTED IN ACCORDANCE WITH THESE PLANS AND MEETS NRCS STANDARDS AND SPECIFICATIONS.

NRCS REPRESENTATIVE DATE | ENGINEER (IF REQUIRED) DATE

GEORGIA 811 Utilities Protection Center, Inc.

COMPOSTING FACILITY:

JOB CLASS: _____

REVISIONS		
DATE	APPROVED	TITLE

THE NATURAL RESOURCES CONSERVATION SERVICE
HELPING PEOPLE HELP THE LAND.

		Date
Designed		
Drawn	B. Wright	12/12
Checked		
Approved		

GEORGIA COMPOSTING FACILITY
No Roof – Concrete Walls
_____ County, GA

NRCS Natural Resources Conservation Service United States Department of Agriculture

File No. ga–eng–317–c11.pdf

Drawing No. Cover

01/04/2013 7:13 AM

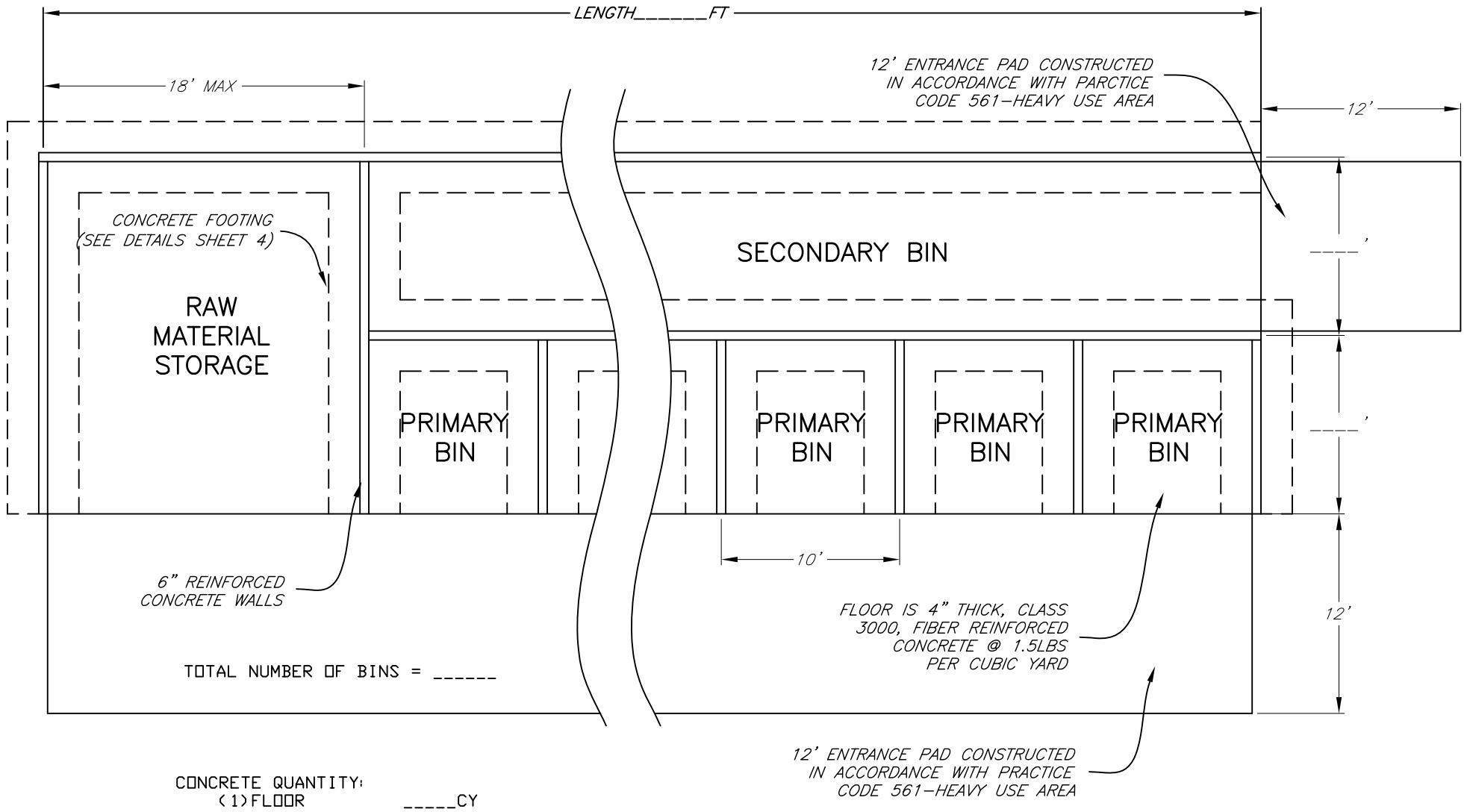

CONCRETE QUANTITY:

(1) FLOOR	_____CY
(2) WALLS	_____CY
(3) FOOTING	_____CY
(4) ENTRANCE PAD	_____CY

PLAN VIEW

NOTES:

1. ALL ENTRANCE AREAS SHALL BE STABILIZED USING PRACTICE STANDARD 561 – HEAVY USE AREA.
2. THE BUILDING SITE SHALL BE CLEARED AND GRUBBED AS REQUIRED. PROPER DRAINAGE SHALL BE PROVIDED AROUND THE ENTIRE BUILDING SO THAT RUNOFF WATER DOES NOT ENTER OR POND NEAR BUILDING.
3. CONCRETE FLOORS AND FOOTINGS SHALL BE PLACED ON FIRM SOIL. ALL LOOSE SOIL SHALL BE REMOVED. IF FILL MATERIAL IS USED, PLACE IN 9" THICK LAYERS AND COMPACT WITH SHEEPSFOOT ROLLER OR OTHER EQUIVALENT COMPACTION METHOD.
4. ALL LUMBER, INCLUDING THE POSTS, IN CONTACT WITH LITTER, COMPOST, OR CONCRETE SHALL BE PRESSURE TREATED (SEE WOOD TREATMENT TABLE ON SHEET 3). FOR ORGANIC OPERATIONS ALTERNATE WOOD TYPES MUST BE APPROVED BY NRCS AND ADDITIONAL MAINTENANCE REQUIREMENTS DOCUMENTED IN WRITING.
5. ALL DIMENSION LUMBER SHALL BE SOUTHERN PINE NO. 2 OR BETTER.
6. ALL NAILS, BOLTS AND OTHER CONNECTORS SHALL BE OF HOT-DIPPED ZINC COATED GALVANIZED STEEL, STAINLESS STEEL, SILICON BRONZE, OR COPPER. NAILS SHALL HAVE SPIRALED OR RINGED (ANNULAR) SHANKS. ALL REFERENCES TO "GALVANIZED" IN THIS SET OF DRAWINGS REFERS TO THE ABOVE LISTED COATINGS.
8. IF DESIRED, WALLS MAY BE CONSTRUCTED OF CMU BLOCK ACCORDING TO BLOCK WALL DRAWING GA-ENG-313-BW1.
9. ON SITE WATER SOURCE IS NECESSARY TO MAINTAIN MOISTURE CONTENT OF COMPOST.
10. ALL DISTURBED AREAS SHALL BE VEGETATED USING PRACTICE CODE 342 – CRITICAL AREA PLANNING.
11. CALL BEFORE YOU DIG: 1-800-282-7411 OR 770-623-4344.

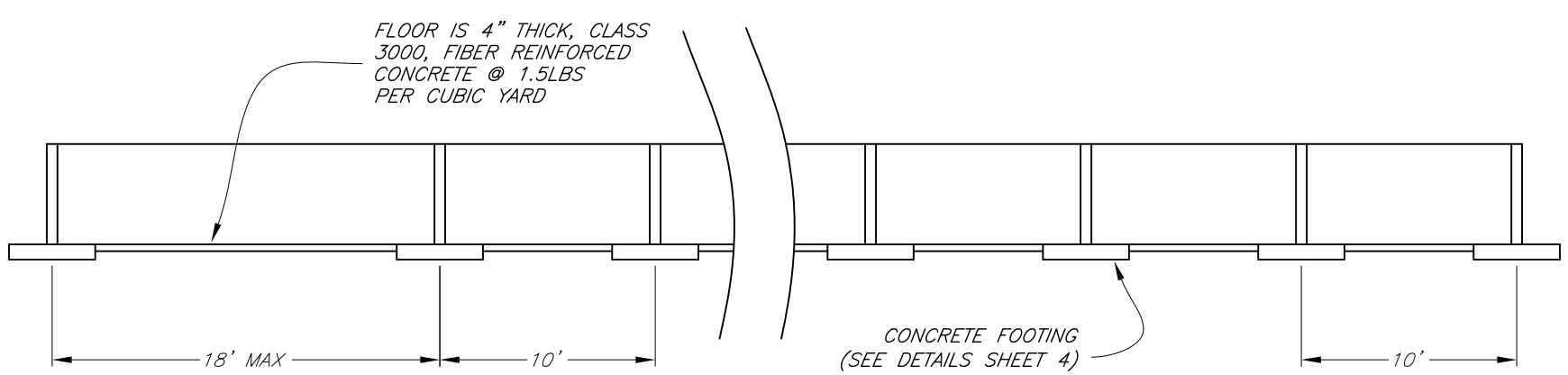

FRONT VIEW

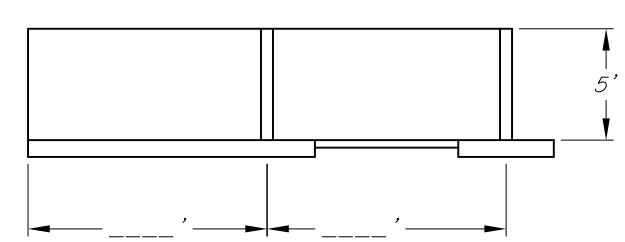

ELEVATION VIEW

REVISIONS		
DATE	APPROVED	TITLE

Date
Designed
Drawn B. Wright 12/12
Checked
Approved

GEORGIA COMPOSTING FACILITY
No Roof – Concrete Walls
_____ County, GA

NRCS
Natural Resources Conservation Service
United States Department of Agriculture

File No.
ga-eng-317-c11.pdf

Drawing No.
Plan

01/04/2013 7:13 AM
Sheet 2 of 4

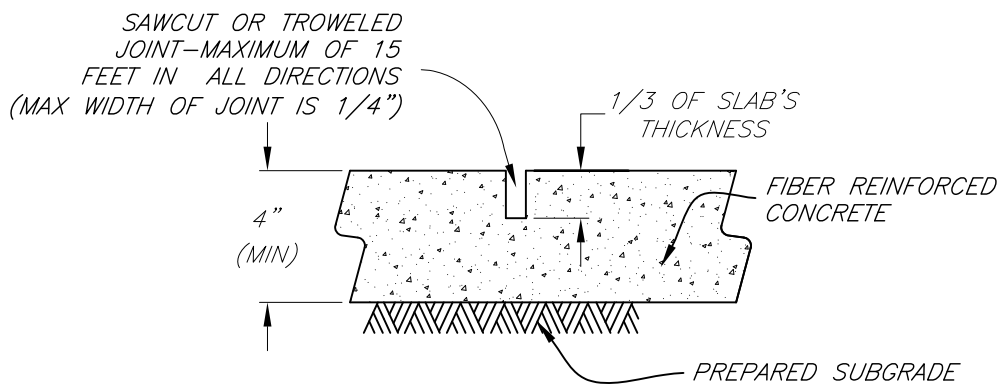

FIBER REINFORCED CONTRACTION JOINT

WOOD TREATMENT TABLE

MINIMUM RETENTION RATES IN PCF					
USE	CCA	ACQ-C/D	CBA-A	CA-B	MCA
GROUND CONTACT OR FRESH WATER	0.40	0.40	0.41	0.21	0.15
IMPORTANT STRUCTURAL MEMBERS	N/A	N/A	N/A	N/A	N/A

CCA - CHROMATED COPPER ARSENATE
ACQ-C/D - ALKALINE COPPER QUATERNARY
CBA-A & CA-B - COPPER AZOLE
MCA - MICRONIZED COPPER AZOLE

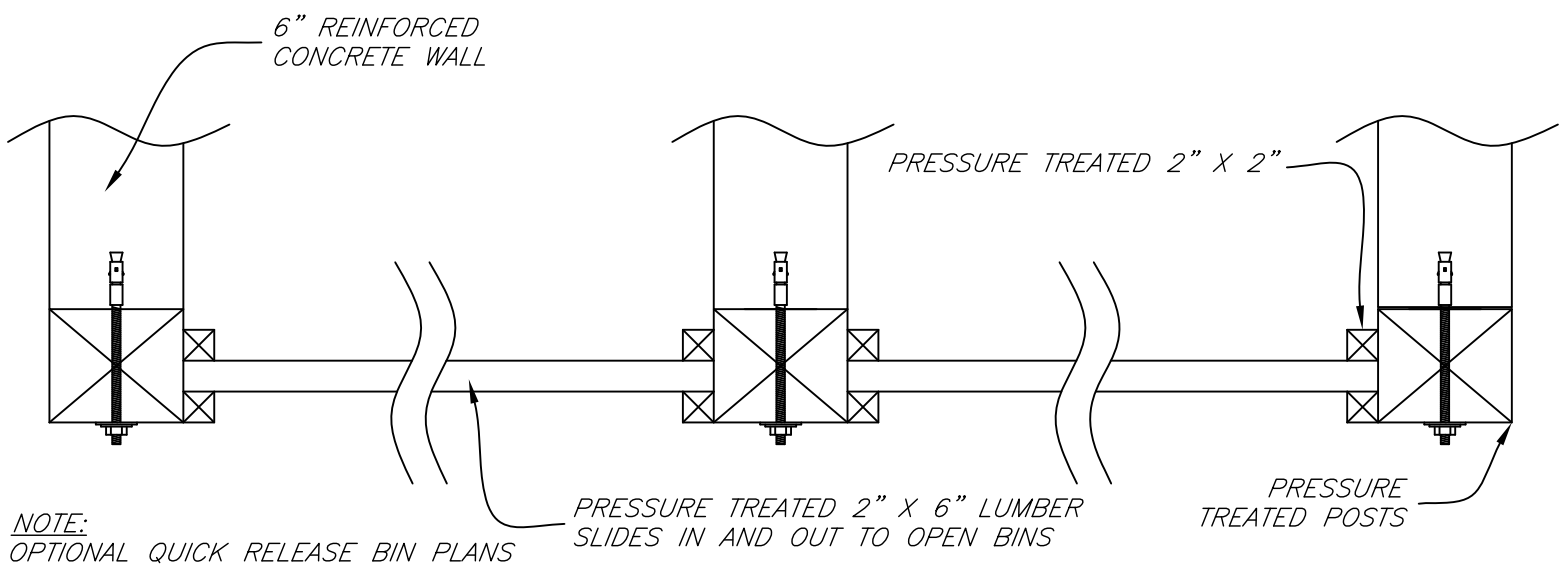

NOTE:
OPTIONAL QUICK RELEASE BIN PLANS ARE AVAILABLE. SEE YOUR NRCS REPRESENTATIVE FOR DETAILS.

STANDARD BIN FRONT - TOP VIEW

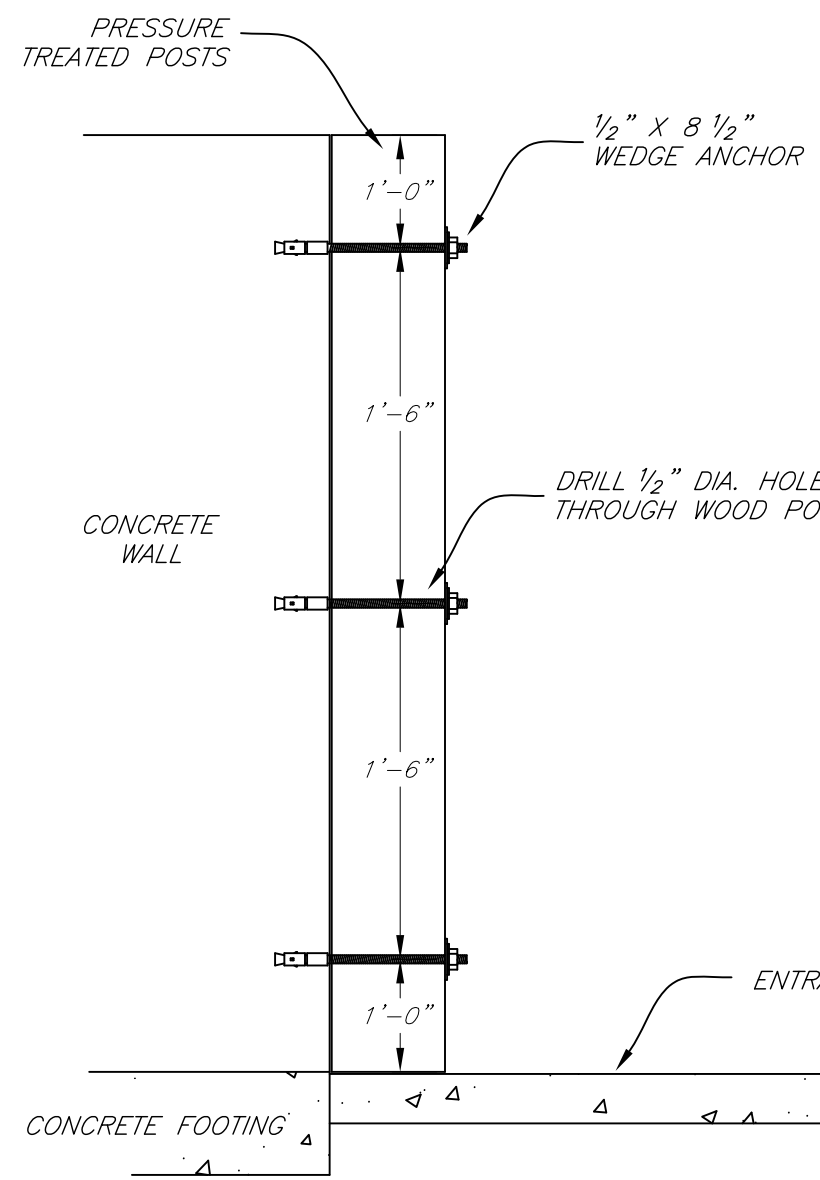

STANDARD BIN FRONT - SIDE VIEW

REVISIONS		
DATE	APPROVED	TITLE

Date
Designed
Drawn B. Wright 12/12
Checked
Approved

GEORGIA COMPOSTING FACILITY
No Roof – Concrete Walls
_____ County, GA

NRCS
Natural Resources Conservation Service
United States Department of Agriculture

File No.
ga-eng-317-c11.pdf

Drawing No.
Details

01/04/2013 7:13 AM
Sheet 3 of 4

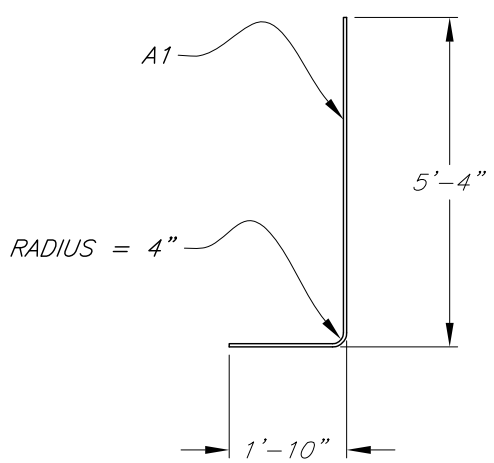

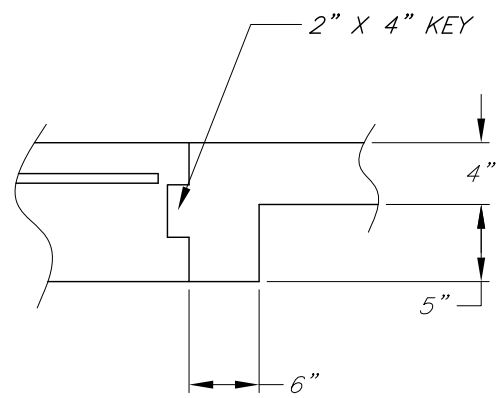

CONSTRUCTION JOINT
Not to scale

MARK	SIZE	GRADE	LENGTH	TYPE	QUANTITY REQUIRED*	
A1	5	60	7'-0"	BENT	BLDG. LENGTH (FT) ____ x 2 =	
A2	5	60	CONTINUOUS	STRAIGHT	BLDG. LENGTH (FT) ____ x2+1 =	
A3	5	60	3'-4"	STRAIGHT	BLDG. LENGTH (FT) ____ x 2 =	

* INCLUDE 19" OVERLAP/SPLICES FOR ALL STEEL BARS NOT LONG ENOUGH TO COVER REQUIRED LENGTHS WITH A SINGLE BAR.

STEEL REINFORCEMENT SCHEDULE

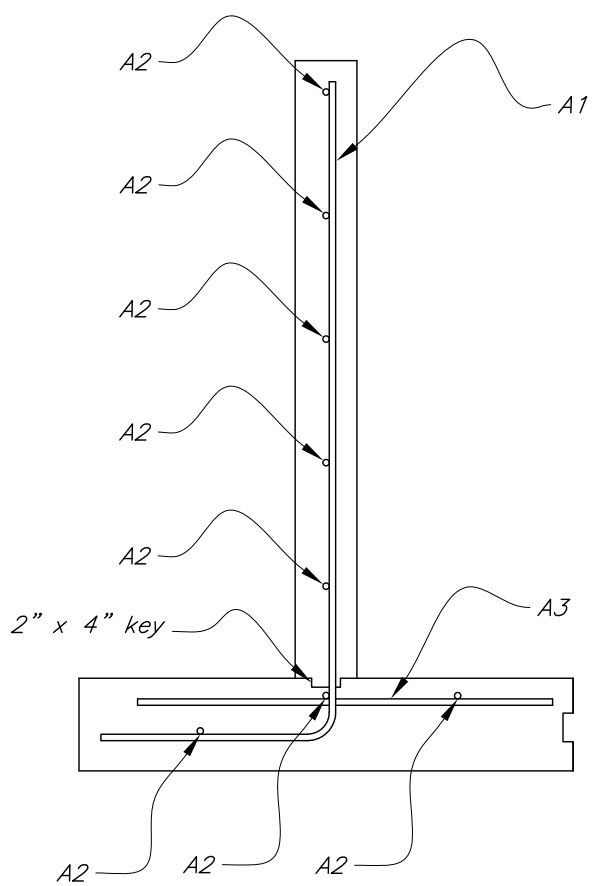

NOTES:

1. 19" LAP SPLICES SHALL BE USED ON ALL STEEL BARS THAT REQUIRE MULTIPLE PIECES TO REINFORCE A REQUIRED LENGTH OF CONCRETE.
2. ALL REBAR IS SPACED 12" O.C.
3. WALL THICKNESS SHALL BE 6". IF WALLS ARE CONSTRUCTED BETWEEN POSTS THEN WALL THICKNESS SHALL BE 5.5".
4. ALL REBAR IN CONTACT WITH PRESSURE TREATED LUMBER SHALL BE EPOXY COATED OR HOT-DIPPED GALVANIZED.
5. SEE DRAWING GA-ENG-313-BW1 FOR USE OF CMU BLOCK IN LIEU OF REINFORCED CONCRETE

CONCRETE QUANTITY:
0.09 CU. YD. PER LINEAR FOOT OF WALL
0.11 CU. YD. PER LINEAR FOOT OF FOOTING

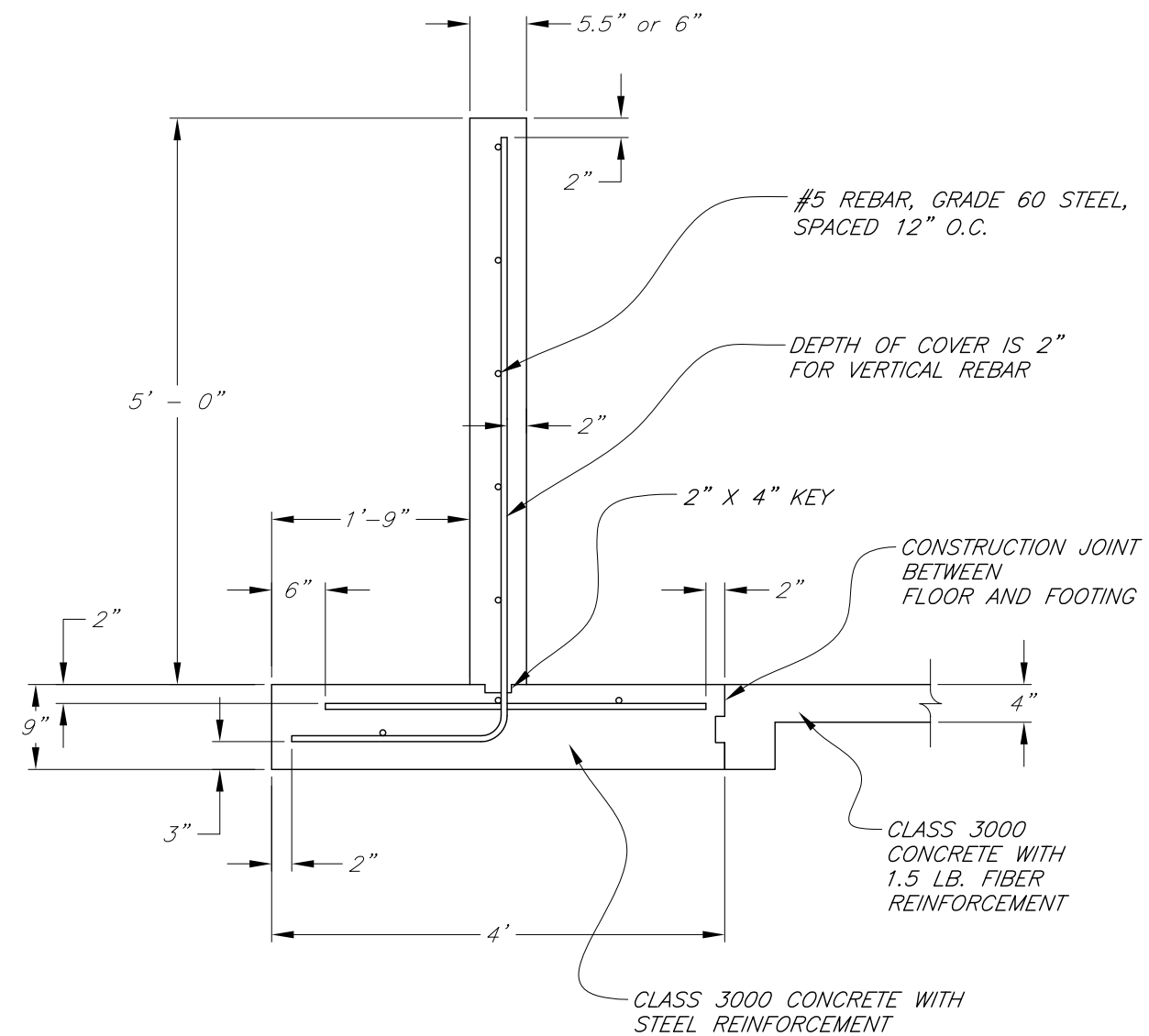

REINFORCED CONCRETE WALL
Not to scale

REVISIONS		
DATE	APPROVED	TITLE

Designed
Drawn B. Wright 12/12
Checked
Approved
Date

GEORGIA COMPOSTING FACILITY
No Roof - Concrete Walls
_____ County, GA

NRCS
Natural Resources Conservation Service
United States Department of Agriculture

File No.
ga-eng-317-c11.pdf

Drawing No.
Details

01/04/2013 7:13 AM
Sheet 4 of 4