UNITED STATES DEPARTMENT OF AGRICULTURE
NATURAL RESOURCES CONSERVATION SERVICE

GEORGIA STANDARD DRAWINGS - EXCAVATED POND

_____ POND
_____ COUNTY, GEORGIA

1. The following drawings were prepared in accordance with Practice Code 378 - Pond, Georgia Building Code (International Building Code 2000), and the State of Georgia Rules for Dam Safety. These plans may be used if all of the following conditions are met for the dam and reservoir:

   a) Structure is Low Hazard - failure will not result in loss of life; in damage to homes, commercial or industrial buildings, main highways, or railroads; or in interrupted use of public utilities.

   b) Use is limited to sites having a watershed area of less than or equal to 300 acres.

   c) Structure is single purpose.

   d) Structure is not classified as "Category I" by the Georgia EPD Safe Dams Program.

2. Hazard Classification shall be completed prior to construction by an NRCS Engineer in accordance with the Technical Release No. 60, the National Engineer Manual (NEM), and the Georgia Supplement to the NEM. Hazard Classification shall be completed under the supervision of the State Conservation Engineer.

INDEX TO DRAWINGS:

SHEET 1 - COVER SHEET
SHEET 2 - NOTES
SHEET 3 - BERM AND PIPE SECTION
SHEET 4 - PLAN VIEW OF BERM AND AUXILIARY SPILLWAY
SHEET 5 - EROSION AND SEDIMENT CONTROL PLAN
SHEET 6 - EROSION AND SEDIMENT CONTROL DETAILS
SHEET 7 - VEGETATION NOTES

CERTIFICATION:

THE _____ POND WILL BE CONSTRUCTED IN ACCORDANCE WITH THE FOLLOWING DRAWINGS AND PRACTICE CODE 378. ALL CHANGES HAVE BEEN APPROVED BY AN ENGINEER WITH JOB APPROVAL AUTHORITY LEVEL IV OR GREATER.

OWNER	DATE	NRCS REPRESENTATIVE	DATE	NRCS ENGINEER	DATE

VICINITY MAP

The Natural Resources Conservation Service provides leadership in a partnership effort to help people conserve, maintain, and improve our natural resources and environment.

		Date
Designed		
Drawn	B WRIGHT	11/10
Checked	J HOLLOWAY	11/10
Approved		

GEORGIA STANDARD DRAWINGS
EXCAVATED POND
PREPARED FOR: _____
COUNTY OF: _____

NRCS
Natural Resources Conservation Service
United States Department of Agriculture

File No.
ga-eng-378-pd3.dwg

Drawing No.
COVER

11/10/2010
Sheet 1 of 7

GENERAL

Detailed engineering plans of the proposed, spillway(s), and reservoir on the attached sheets shall be included as part of these specifications.

RESPONSIBILITIES OF

LANDOWNERS:
The landowner is responsible for obtaining all required permits and easements prior to construction. The landowner must acquaint himself with these plans and specifications to determine that the completed structure will fulfill his present and future needs.

CONTRACTOR:
The contractor is to be acquainted with the provisions of these plans and specifications, conditions at the site that may affect the schedule of operation, and the location and meaning of all stakes on the site. All benchmarks, grade and line stakes must be left undisturbed and protected by the contractor to facilitate construction and inspection. The contractor is responsible for locating and replacing all utilities, irrigation lines, etc.

U.S. DEPARTMENT OF AGRICULTURE – NATURAL RESOURCES CONSERVATION SERVICE
The United States and its employees are in no manner a party to any verbal or written contract between the landowner and the contractor. NRCS employee(s), within limit of personnel available, will assist the landowner with inspection and advise on technique during construction to assure satisfactory compliance with the plans and specifications.

SPECIFICATIONS FOR CONSTRUCTION OF PONDS AND RESERVOIRS

CLEARING: Cut all trees, brush, and stumps as flush with the ground as is practical and remove them from the site and spoil areas before excavation is performed. Dispose of all material cleared from the area by burning or removing from the site and stacking. Burn the material in accordance with Georgia laws and regulations.

EXCAVATION OR SPOIL: Construct the pond, berms and spoil banks (spoil disposal), and waste material as nearly to lines, dimensions, grades, and slopes shown on the plans or staked on the site as skillful operations of the excavating equipment will permit.

Place excavated material so that its weight does not endanger the stability of the pond side slopes, and where it will not be washed into the pond or downstream water course by rainfall. Dispose of the excavated material in one of the following ways:

a) Uniformly spread to a height not to exceed 3 feet with the top graded to a continuous slope away from the pond.

b) Uniformly place or shape reasonably well the side slopes assuming a natural angle of repose for the excavated material behind a berm width equal to the depth of the pond but not less than 12 feet.

c) Shape to a designed form that blends visually with the landscape.

d) Use for low embankment and leveling.

e) Haul away in accordance with local and state regulations.

BERM: At the end of construction, a berm _☐_ will _☐_ will not be constructed around the downstream (lower) side of the pond. If a berm is required, the berm is to be constructed to the lines and grades shown on sheets 3 and 4 of these drawings, using material excavated from the pool area. The berm will be constructed with a level uniform top elevation except at the pipe location where earth fill will be placed to an elevation 1 foot higher than the top of berm elevation to prevent damage to the pipe during flow over the berm. Limit the height of the berm (at the top of berm or auxiliary spillway crest, whichever is lower) to 2.9 feet above the lowest elevation in the floodplain. Construct the berm in a manner that will not restrict water from entering the pond.

SPILLWAY: Construct an auxiliary spillway at the location and to the lines and grades shown on the drawings

PIPE CONDUIT: A 12" schedule 40 PVC pipe _☐_ will _☐_ will not be installed under the berm and connected to in–line water control structure, or equivalent, on the inside of the pond to maintain the normal pool elevation. (PVC pipe shall be PVC 1120 or PVC 1220 conforming to ASTM D1785 or ASTM D2241, pipe joints shall be glued with no gaskets.) A 12" heavy duty bar guard or equivalent is to be installed on the inlet of the pipe to prevent blockage. Pour 1 c.y. of concrete at riser base of in–line water control structure to prevent flotation of the structure and pipe.

VEGETATION: Adapted vegetation shall be established on all exposed surfaces of the embankment, spillway, borrow, and spoil areas as soon as possible after construction. Vegetation will be applied as critical area planting and will include seedbed preparation, seeding, liming, fertilizing, and mulching. The berm slopes shall be tracked with a dozer to facilitate vegetation establishment.

EROSION AND SEDIMENT CONTROL: During construction, erosion should be minimized and sediment controlled utilizing Best Management Practices listed in the Manual for Erosion and Sediment Control in Georgia. See attachments concerning construction specifications, vegetative requirements, etc.

CONCRETE SPECIFICATIONS

1. Concrete shall contain:
   (a) A minimum of 6 bags (564 lbs.) of cement per cubic yard of concrete to obtain 3000 psi minimum compressive strength in 28 days.
   (b) Entrained air at 6% plus or minus 1%.
   (c) Coarse aggregate from 3/8" to 1".
   (d) Type I Portland Cement.
2. Concrete will have a 1"–4" slump.
3. Water to cement ratio of 0.5 shall not be exceeded.
5. Superplasticizers (ASTM C 494, Type F or G) may be used to increase workability.
4. Polypropylene fibers shall be used within the concrete. Lengths of fibers shall be 1/2" to 2" and dosage shall be 1.5 lbs./cu. yd. of concrete.
5. Rods or mechanical vibration shall be used to consolidate the concrete.
6. The subgrade shall be well compacted and wetted before the placement of concrete.
7. Reinforcing steel shall meet ASTM A 615 specifications.
8. Concrete shall not be mixed nor placed when the daily minimum temperature is less than 40 degrees F unless facilities are provided to prevent the concrete from freezing.

		Date
Designed		
Drawn	B WRIGHT	11/10
Checked	J HOLLOWAY	11/10
Approved		

GEORGIA STANDARD DRAWINGS
EXCAVATED POND
PREPARED FOR: _____
COUNTY OF: _____

NRCS
Natural Resources Conservation Service
United States Department of Agriculture

File No.
ga–eng–378–pd3.dwg

Drawing No.
NOTES

11/10/2010
Sheet *2* of *7*

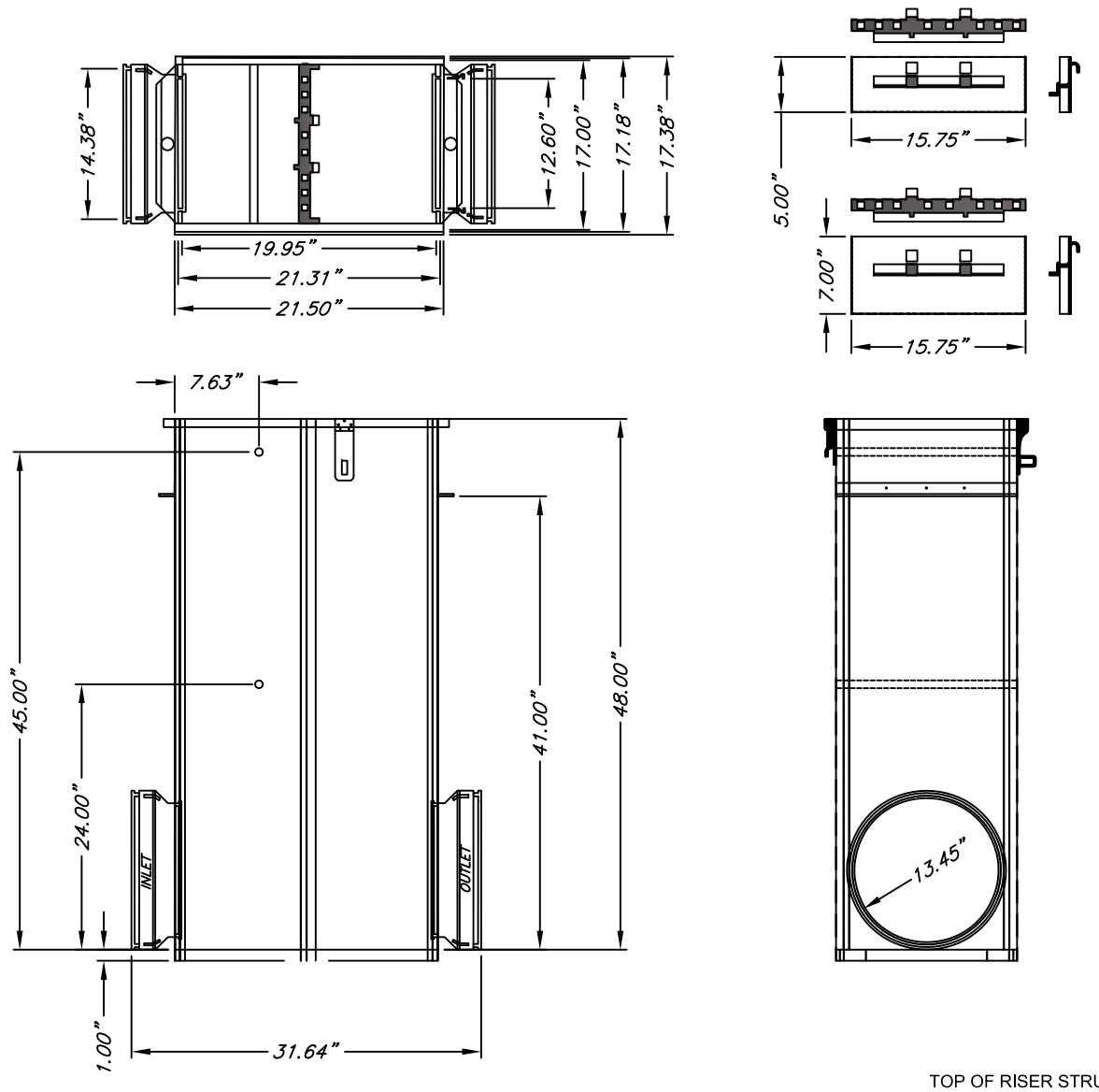

INLINE WATER LEVEL CONTROL STRUCTURE

Note: Structure drawn with 1002–1212 Coupler.
(Drawings used with permission of Agri Drain Corporation and are typical of riser installation.)

CERTIFICATION

I certify that I have made, or caused to be made, a final inspection of this pond project and that all work related thereto has been completed in accordance with these plans and with all other applicable specifications except as listed below.

SIGNED_____TITLE_____DATE_____

EXCEPTIONS:

_____

_____

_____

CONTRACTOR CERTIFICATION

I certify that the cutoff trench (if required), core wall and pipe were installed in accordance with these plans.

Contractor Signature_____

Date:_____

GENERAL INFORMATION

USES FOR IMPOUNDED WATER _____

NORMAL POOL AREA_____ACRES MAX. DEPTH _____FEET

CAPACITY @ NORMAL POOL ELEVATION = _____ ACRE-FEET

SOURCE OF WATER _____

HAZARD CLASS _____ JOB CLASS _____

BILL OF MATERIALS

CONDUIT PIPE _____" DIA. Sch 40 PVC	_____LF
DRAIN PIPE _____" DIA. Sch 40 PVC	_____LF
____" INLINE STRUCTURE	_____EACH
HEIGHT OF INLINE STRUCTURE TO BE ORDERED	_____FT
_____" DIA TRASH GUARD	_____EACH
3000 PSI CONCRETE (FIBER REINFORCED)	_____CU YDS
EXCAVATION	_____CUBIC YARDS
_____	
_____	

1. See official "Bid Schedule" for complete listing of bid items not shown on this sheet.
2. Refer to construction specifications and "Pipe Conduit" notes on Sheet 2 for additional information.
3. Provide this sheet to pipe company.

TBM DESCRIPTION:_____

_____

_____

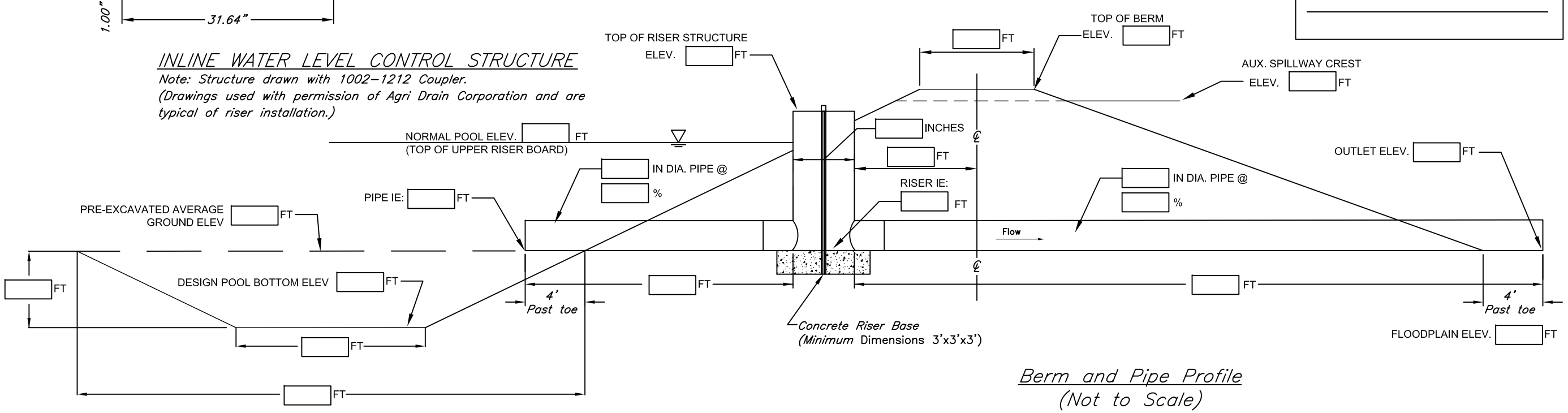

Berm and Pipe Profile
(Not to Scale)

		Date
Designed		
Drawn	B WRIGHT	11/10
Checked	J HOLLOWAY	11/10
Approved		

GEORGIA STANDARD DRAWINGS
EXCAVATED POND
PREPARED FOR: _____
COUNTY OF: _____

NRCS
Natural Resources Conservation Service
United States Department of Agriculture

File No.
ga–eng–378–pd3.dwg

Drawing No.
BERM & PIPE

11/10/2010
Sheet 3 of 7

NOTE: ENSURE THAT AUXILIARY SPILLWAY FLOW WILL RETURN TO THE STREAM CHANNEL BEFORE THE PROPERTY LINE.

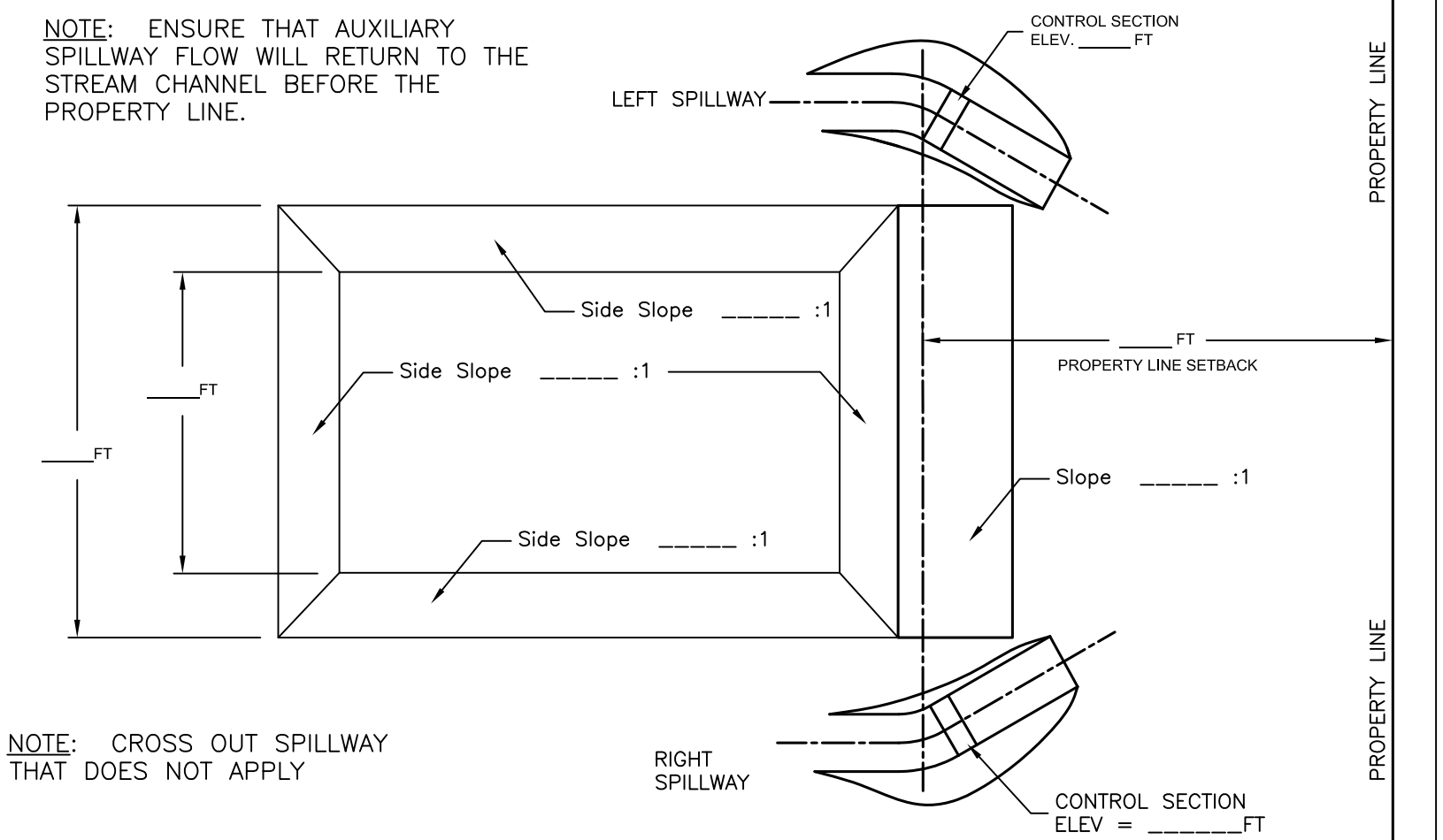

NOTE: CROSS OUT SPILLWAY THAT DOES NOT APPLY

PLAN VIEW OF EXCAVATED POND

NOT TO SCALE

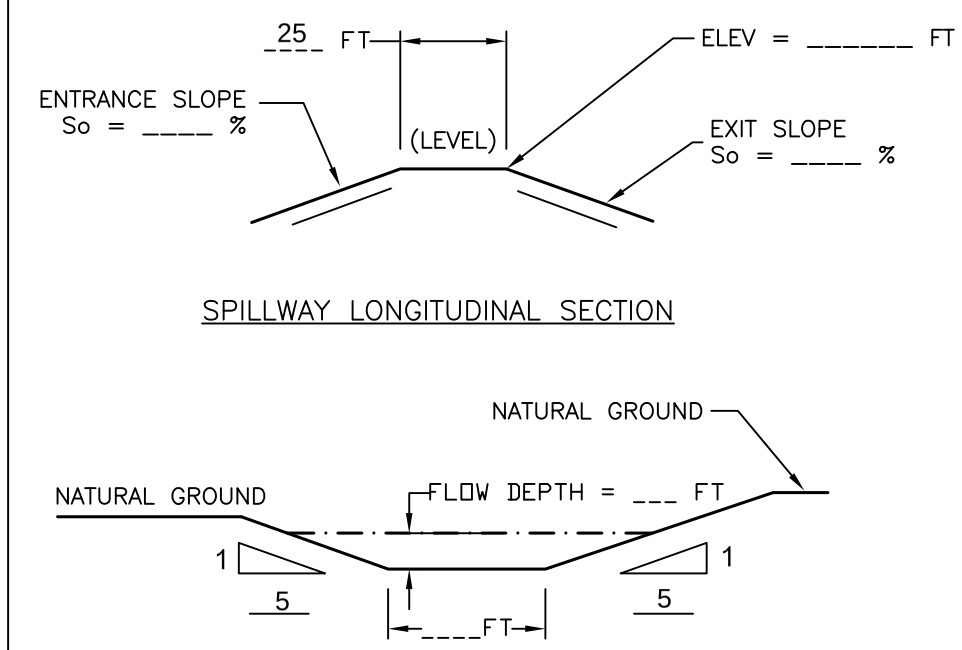

SPILLWAY LONGITUDINAL SECTION

CROSS SECTION

AUXILIARY SPILLWAY DETAILS

NOT TO SCALE

		Date
Designed		
Drawn	B WRIGHT	11/10
Checked	J HOLLOWAY	11/10
Approved		

GEORGIA STANDARD DRAWINGS
EXCAVATED POND
PREPARED FOR: _____
COUNTY OF: _____

NRCS
Natural Resources Conservation Service
United States Department of Agriculture

File No.
ga-eng-378-pd3.dwg

Drawing No.
PLAN & BERM

11/10/2010
Sheet 4 of 7

NOTES

1. ALL DAM AND AUXILIARY SPILLWAY AREAS AND ANY OTHER DISTURBED AREAS GREATER THAN 3% SLOPE WILL RECEIVE TREATMENT FROM Ds1, Ds2, AND Ds3.

2. ANY DISTURBED AREA, OTHER THAN THE DAM AND AUXILIARY SPILLWAY AREA, THAT IS LESS THAN 3% SLOPE WILL RECEIVE TREATMENT FROM Ds2 AND Ds3.

NOTES

1. INSTALL TWO ROWS OF TYPE C SILT FENCE ON THE DOWNSTREAM SIDE OF THE DAM. TOTAL LENGTH = _____ FT.

2. IF NEEDED, INSTALL A ROW OF TYPE A SILT FENCE AT THE OUTLET END OF THE AUXILIARY SPILLWAY. TOTAL LENGTH = _____ FT.

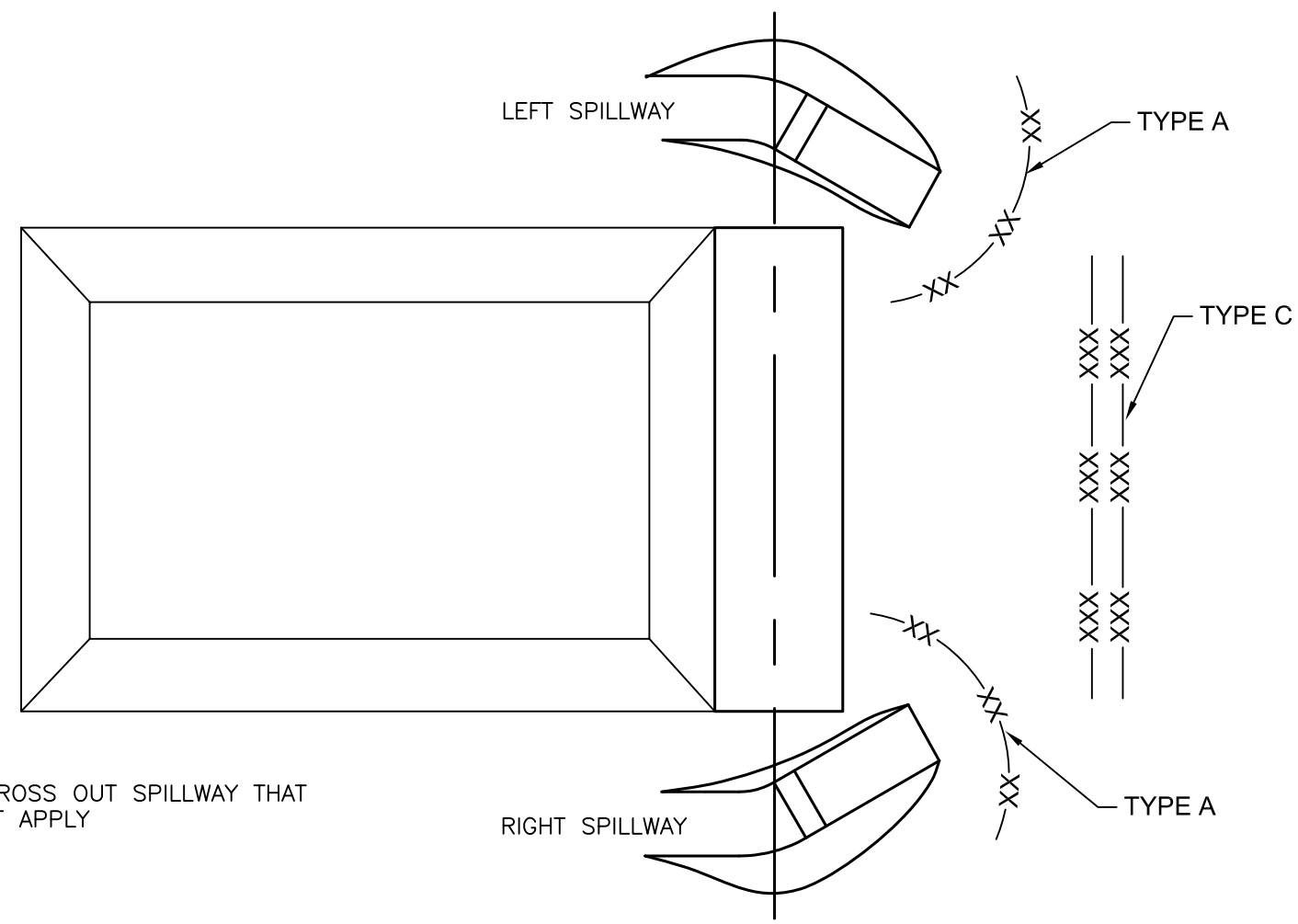

NOTE: CROSS OUT SPILLWAY THAT DOES NOT APPLY

EROSION AND SEDIMENT CONROL PLAN
NOT TO SCALE

STRUCTURAL PRACTICES		
SYMBOL	PRACTICE	DESCRIPTION
Cd	Checkdam	A small temporary barrier or dam constructed across a swale, drainage ditch, or area of concentrated flow
Ch	Channel Stabilization	Improving, constructing, or stabilizing an open channel existing stream, or ditch.
Co	Construction Exit	A crushed stone pad located at the construction site exitto provide a place for removing mud from tires thereby protecting public streets
Cr	Construction Road Stabilization	A travelway constructed as part of a construction plan including access roads, subdivision roads, parking areas, and other on-site vehicle transportation routes.
Dc	Stream Diversion Channel	A temporary channel constructed to convey flow around a construction site while a permanent structure is being constructed.
Di	Diversion	An earth channel or dike located above, below or across a slope to divert runoff. This may be a temporary or permanent structure.
Rd	Rock Filter Dam	A permanent or temporary stone filter dam installed across small streams or drainageways.
Sd_1	Sediment Barrier	A barrier to prevent sediment from leaving the construction site. It may be sandbags, bales of straw or hay, brush, logs and poles, gravel, or a silt fence.
Sr	Temorary Stream Crossing	A temporary bridge or culvert type structure protecting a stream or watercourse from damage by crossing construction equipment.
Su	Surface Roughening	A rough soil surface with horizontal depressions on a contour or slope left in a roughened condition after grading.

VEGETATIVE MEASURES		
SYMBOL	PRACTICE	DESCRIPTION
Ds1	Disturbed Area Stabilization (with Mulching Only)	Establishing temporary protection for disturbed areas where seeeding may not have a suitable growing season to produce an erosion retarding cover.
Ds2	Disturbed Area Stabilization (with Temporary Seeding)	Establishing temporary vegetative cover with fast growing seedings on disturbed areas.
Ds3	Disturbed Area Stabilization (with Permananent Vegetation)	Establishing permanent vegetative cover such as trees shrubs, vines, grasses, sod, or legumes on disturbed areas.
Tb	Tackifiers and Binders	Substance used to anchor straw or hay mulch by causing the organic material to bind together.

NOTE: THE PRACTICES SHOWN IN THE LEGEND ABOVE ARE THE MOST COMMONLY USED FOR POND CONSTRUCTION. FOR COMPLETE LIST OF BEST MANAGEMENT PRACTICES AND GUIDANCE ON DESIGN AND USE OF THESE PRACTICES PLEASE SEE THE MANUAL FOR EROSION AND SEDIMENT CONTROL IN GEORGIA, 2000 EDITION.

		Date
Designed		
Drawn	B WRIGHT	11/10
Checked	J HOLLOWAY	11/10
Approved		

GEORGIA STANDARD DRAWINGS
EXCAVATED POND
PREPARED FOR: _____
COUNTY OF: _____

NRCS
Natural Resources Conservation Service
United States Department of Agriculture

File No.
ga-eng-378-pd3.dwg

Drawing No.
E&S PLAN

11/10/2010
Sheet 5 of 7

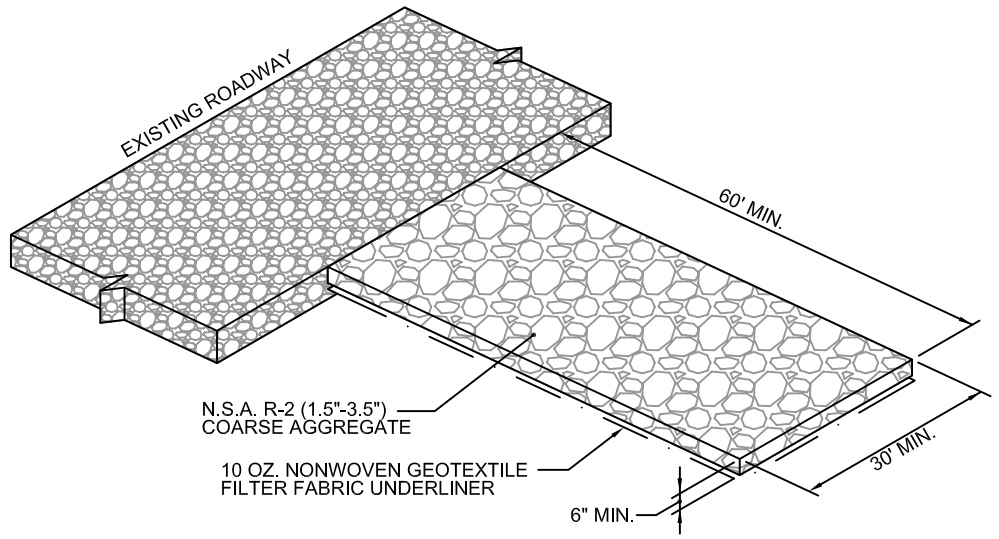

NOTES:
1. THE EXIT SHALL BE MAINTAINED IN A CONDITION WHICH WILL PREVENT TRACKING OR FLOW OF MUD ONTO PUBLIC RIGHT-OF-WAY. THIS MAY REQUIRE PERIODIC TOP DRESSING WITH 1.5-3.5 INCH STONE, AS CONDITIONS DEMAND, AND REPAIR AND/OR CLEANOUT OF ANY STRUCTURES TO TRAP SEDIMENT.
2. ALL MATERIALS SPILLED, DROPPED, WASHED OR TRACKED FROM VEHICLES ONTO ROADWAYS OR INTO STORM DRAINS MUST BE REMOVED IMMEDIATELY. UPON COMPLETION OF CONSTRUCTION, STONE AND GEOTEXTILE WILL BE REMOVED.

Co CONSTRUCTION ENTRANCE
NTS

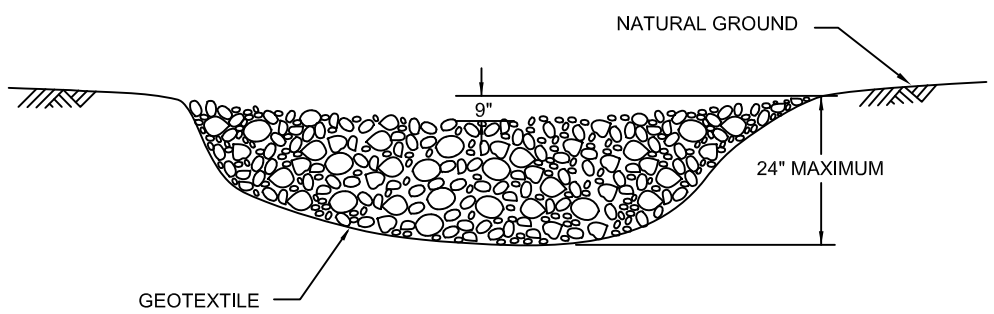

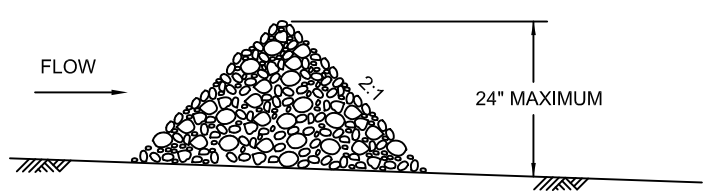

NOTES:
1. STONE CHECK DAMS SHALL BE CONSTRUCTED OF GRADED SIZE 2-10 INCH STONE. MECHANICAL OR HAND PLACEMENT SHALL BE REQUIRED TO INSURE COMPLETE COVERAGE OF ENTIRE WIDTH OF DITCH OR SWALE AND THAT CENTER OF DAM IS LOWER THAN THE EDGES.
2. PERIODIC INSPECTION AND REQUIRED MAINTENANCE MUST BE PROVIDED. SEDIMENT SHALL BE REMOVED WHEN IT REACHES A DEPTH OF ONE-HALF THE ORIGINAL DAM HEIGHT OR BEFORE. IF THE AREA IS TO BE MOWED, CHECK DAMS SHALL BE REMOVED ONCE FINAL STABILIZATION HAS OCCURRED. OTHERWISE, CHECK DAMS MAY REMAIN IN PLACE PERMANENTLY.
3. AFTER REMOVAL, THE AREA BENEATH THE DAM SHALL BE SEEDED AND MULCHED IMMEDIATELY.

Cd CHECK DAM
NTS

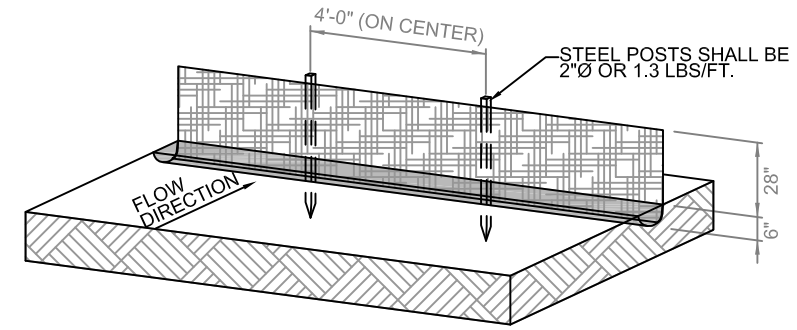

NOTES:
1. TEMPORARY PLANTING MUST BE REPLACED BY PERMANENT GRASS DURING THE FIRST AVAILABLE PLANTING SEASON.
2. SILT CONTROL SHALL BE IN EFFECT PRIOR TO ANY GRADING OR CONSTRUCTION.
3. USE TYPE 'C' WIRE-REINFORCED SILT FENCE AS STATED IN THE STANDARD SPECIFICATIONS FOR ROAD AND BRIDGE CONSTRUCTION DEPARTMENT OF TRANSPORTATION, STATE OF GEORGIA (DEC. 19, 1991), FILTER FABRIC FOR TYPE 'C' FENCE SHALL BE A NON-CALENDERED WOVEN FABRIC CONSTRUCTED WITH MONOFILAMENT YARNS. THE WOVEN WIRE-REINFORCEMENT FENCE SHALL BE AT LEAST 32 INCHES HIGH AND BE AT LEAST 10 GAUGE FOR THE TOP AND BOTTOM WIRES AND 12.5 GAUGE FOR THE REST OF THE WIRE.
4. SPLICED JOINTS SHALL OVERLAP 18", WITH MATCHING POST.
5. DRIVE 4' (48") MIN. POSTS 12"-18" INTO SOIL.
6. DIG DITCH 12" WIDE, 6" DEEP. LAY FABRIC 6"-8" DEEP, THEN BACKFILL.
7. ALONG STREAM BUFFERS AND OTHER SENSITIVE AREAS, TWO ROWS OF TYP C SILT FENCE OR ONE ROW OF TYPE C SILT FENCE BACKED BY HAYBALES SHALL BE USED.
8. TYPE A SILT FENCE MAY BE USED IN AREAS OTHER THAN ALONG THE STREAM BUFFER.

Sd1 TYPE C SILT FENCE DETAIL
NTS

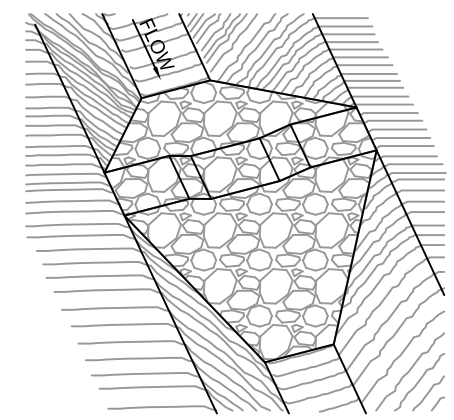

ISOMETRIC VIEW

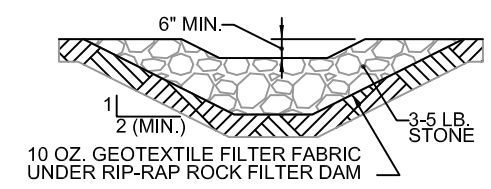

UPSTREAM VIEW

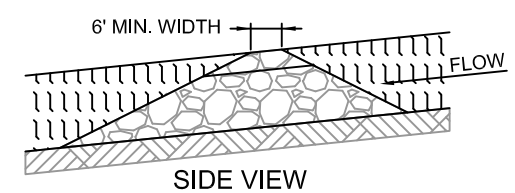

SIDE VIEW

Rd ROCK FILTER DAM
NTS

		Date
Designed		
Drawn	B WRIGHT	11/10
Checked	J HOLLOWAY	11/10
Approved		

GEORGIA STANDARD DRAWINGS
EXCAVATED POND
PREPARED FOR: _____
COUNTY OF: _____

NRCS
Natural Resources Conservation Service
United States Department of Agriculture

File No.
ga-eng-378-pd3.dwg

Drawing No.
E&S DETAILS

11/10/2010
Sheet 6 of 7

EROSION CONTROL MEASURES

1. CONFIRM LOCATION OF AND CONSTRUCT/INSTALL SILT FENCES AND CHECK DAMS AS SHOWN ON THE DRAWINGS AND IN ACCORDANCE WITH MANUAL FOR EROSION AND SEDIMENT CONTROL IN GEORGIA.
2. ADD TOPSOIL/SURFACE ROUGHEN AS REQUIRED TO PROVIDE BED FOR PERMANENT
3. APPLY PERMANENT SOIL STABILIZATION.
4. AREAS TO BE LEFT DORMANT FOR LONGER THAN 7 DAYS THAT HAVE NOT ALREADY BEEN PERMANENTLY SEEDED MUST BE TEMPORARILY STABILIZED.
5. AFTER GROUND COVER IS WELL ESTABLISHED AND THE SITE IS STABILIZED, RETURN TO THE SITE AND REMOVE ALL TEMPORARY MEASURES AND INSTALL PERMANENT VEGETATION TO ALL AREAS DISTURBED BY TEMPORARY MEASURES.
6. REMOVE EROSION CONTROL MEASURES WITHIN 30 CALENDAR DAYS AFTER FINAL SITE STABILIZATION.

MANAGEMENT PLAN

EROSION CONTROL MEASURES WILL BE MAINTAINED AT ALL TIMES. ALL EROSION CONTROL MEASURES SHALL BE INSPECTED DAILY AND AFTER EACH HEAVY RUNOFF PRODUCING RAINFALL. ALL NEEDED REPAIRS SHALL BE MADE IMMEDIATELY TO MAINTAIN A FUNCTIONING EROSION CONTROL SYSTEM. THE FAILURE OF ANY EROSION CONTROL DEVICE TO FUNCTION AS INTENDED, FOR ANY REASON, SHALL BE CORRECTED IMMEDIATELY. ADDITIONAL EROSION AND SEDIMENT CONTROL MEASURES WILL BE INSTALLED IF DEEMED NECESSARY BY ON-SITE INSPECTION. STRUCTURES THAT SHALL BE INSPECTED INCLUDE:

SEEDING (Ds2) AND FERTILIZING (Ds3)
SEEDED AREA SHALL BE INSPECTED FOR FAILURE AND NECESSARY REPAIRS SHALL BE MADE WITHIN THE SAME SEASON, IF POSSIBLE.

SILT FENCE (Sd1)
ANY FABRIC WHICH COLLAPSES, TEARS, DECOMPOSES, OR BECOMES INEFFECTIVE WILL BE REPLACED IMMEDIATELY. REMOVE SEDIMENT DEPOSITS BEHIND FENCE WHEN SEDIMENT ACCUMULATES TO 6 INCHES.

ROCK FILTER DAM (Rd), CHECK DAM (Cd) OR BRUSH BARRIERS (Sd1-Bb)
INSPECT FOR SIGNIFICANT EROSION AROUND THE EDGES AND BETWEEN BARRIERS. REMOVE SEDIMENT ACCUMULATED BEHIND THE DAMS AS REQUIRED TO PREVENT DAMAGE TO CHANNEL VEGETATION. ADD STONES TO DAMS AS REQUIRED TO MAINTAIN DESIGN HEIGHT AND CROSS SECTION.

VEGETATIVE PLAN

TEMPORARY EROSION CONTROL DEVICES SHALL BE MAINTAINED UNTIL PERMANENT COVER IS ESTABLISHED AND THEN REMOVED SO THAT DRAINAGE FROM THE SITE IS NOT IMPEDED.

ALL VEGETATIVE STABILIZATION SHALL BE ACCOMPLISHED AS SOON AS CONSTRUCTION PERMITS.

TEMPORARY SEEDING (Ds2)

LIME: 2 TONS PER ACRE

FERTILIZER: APPLY FERTILIZER PER FERTILIZER SCHEDULE

SEEDING: APPLY SEED FOR TEMPERARY VEGETATION PER VEGETATIVE COVER SCHEDULE

MULCH: SHALL BE UNCHOPPED, UNROTTED, SMALL GRAIN STRAW APPLIED AT A RATE OF 2.0 TONS PER ACRE OR 2.5 TONS PER ACRE IF HAY IS USED. MULCH MATERIAL SHALL BE RELATIVELY FREE OF ALL KINDS OF WEEDS. SPREAD MULCH MECHANICALLY OR UNIFORMLY BY HAND. MULCH ANCHORING SHALL BE ACCOMPLISHED IMMEDIATELY AFTER MULCH PLACEMENT TO MINIMIZE LOSS BY WIND OR WATER. THIS MAY BE DONE BY MULCH ANCHORING TOOL, NETTING OR LIQUID MULCH BINDERS. APPROVED TACKIFIERS AND BINDERS ARE LISTED IN THE TACKIFIERS AND BINDERS TABLE.

PERMANENT SEEDING (Ds3)

LIME: 2 TONS PER ACRE

FERTILIZER: APPLY FERTILIZER PER FERTILIZER SCHEDULE

SEEDING: APPLY SEED FOR PERMANENT VEGETATION PER VEGETATIVE COVER SCHEDULE

SEEDBED PREPARATION: AREA TO BE SEEDED SHALL BE LOOSE AND PLIABLE TO A DEPTH OF AT LEAST 4 INCHES. THE TOP LAYER SHALL BE LOOSENED BY RAKING, DISCING OR TRACKING WITH DOZER BEFORE SEEDINGOCCURS. IN LIEU OF SOIL TEST RESULTS, APPLY 1 TO 2 TONS OF DOLOMITIC LIMESTONE AND 1500 POUNDS OF 10-10-10 FERTILIZER PER ACRE. HARROW OR DISC LIME AND FERTILIZER INTO THE SOIL TO A DEPTH OF AT LEAST 4 INCHES.

SEEDING: APPLY SEED FOR PERMANENT VEGETATION PER VEGETATIVE COVER SCHEDULE. APPLY SEED UNIFORMLY BY MECHANICALLY OR BY HYDROSEEDER ON A MOIST, FIRM SEEDBED.

MULCH: SHALL BE UNCHOPPED, UNROTTED, SMALL GRAIN STRAW APPLIED AT A RATE OF 2.0 TONS PER ACRE OR 2.5 TONS PER ACRE IF HAY IS USED. MULCH MATERIAL SHALL BE RELATIVELY FREE OF ALL KINDS OF WEEDS. SPREAD MULCH MECHANICALLY OR UNIFORMLY BY HAND. CLEAN COTTON GIN TRASH MAY BE USED IN LIEU OF STRAW OR HAY MULCH. APPLY GIN TRASH A MAXIMUM OF 1/2 INCH THICK COVERING 75% OF THE AREA. MULCH ANCHORING SHALL BE ACCOMPLISHED IMMEDIATELY AFTER MULCH PLACEMENT TO MINIMIZE LOSS BY WIND OR WATER. THIS MAY BE DONE BY MULCH ANCHORING TOOL, NETTING OR LIQUID MULCH BINDERS. APPROVED TACKIFIERS AND BINDERS ARE LISTED IN THE TACKIFIERS AND BINDERS TABLE.

FERTILIZER SCHEDULE

TYPE OF SPECIES	APPLICATION/ YEAR	ANALYSIS OR EQUIVALENT N-P-K	RATE LBS./AC.	"N" TOP DRESSING RATE LBS./AC.
COOL SEASON GRASSES	FIRST SECOND MAINTENANCE	6–12–12 6–12–12 10–10–10	1500 1000 400	50–100 1/ 2/ – 30
COOL SEASON GRASSES & LEGUMES	FIRST SECOND MAINTENANCE	6–12–12 0–12–10 0–10–10	1500 1000 400	0–50 1/ – –
GROUND COVERS	FIRST SECOND MAINTENANCE	10–10–10 10–10–10 10–10–10	1300 3/ 1300 3/ 1100	– – –
PINE SEEDLINGS	FIRST	20–10–5	SEE NOTE 1	–
SHRUB LESPEDEZA	FIRST MAINTENANCE	0–10–10 0–10–10	700 700 4/	– –
TEMPORARY COVER CROPS SEEDED ALONE	FIRST	10–10–10	500	30 5/
WARM SEASON GRASSES	FIRST SECOND MAINTENANCE	6–12–12 6–12–12 10–10–10	1500 800 400	50–100 2/ 6/ 50–100 2/ 30
WARM SEASON GRASSES & LEGUMES	FIRST SECOND MAINTENANCE	6–12–12 0–10–10 0–10–10	1500 1000 400	50 6/

NOTE:
1. ONE 21–GRAM PELLET PER SEEDLING PLACED IN THE CLOSING HOLE.

FOOTNOTES:
1/ APPLY IN SPRING FOLLOWING SEEDING.
2/ APPLY IN SPLIT APPLICATION WHEN HIGH RATES ARE USED.
3/ APPLY IN 3 SPLIT APPLICATIONS.
4/ APPLY WHEN PLANTS ARE PRUNED.
5/ APPLY TO GRASS SPECIES ONLY.
6/ APPLY WHEN PLANTS GROW TO A HEIGHT OF 2 TO 4 INCHES.

VEGETATIVE COVER SCHEDULE

MONTH	TEMPORARY Ds2	RATE/ACRE ALONE	RATE/ACRE MIX	RESOURCE AREA	PERMANENT Ds3	RATE/ACRE ALONE	RATE/ACRE MIX	RESOURCE AREA
JAN.	RYE ANNUAL RYEGRASS ANNUAL LESPEDEZA	3 BU. 40 LBS. 40 LBS.	0.5 BU. – 10 LBS.	C M, P, C 3/ C	UNHULLED BERMUDA PENSACOLA BAHIA	– 60 LBS.	6 LBS. 30 LBS.	P, C P, C
FEB.	RYE ANNUAL RYEGRASS ANNUAL LESPEDEZA 3/	3 BU. 40 LBS. 40 LBS.	1.5 BU. – 10 LBS.	C M, P, C M, P, C	SERICEA LESPEDEZA 1/2/ UNHULLED BERMUDA HULLED BERMUDA PENSACOLA BAHIA	– – – 60 LBS.	75 LBS. 6 LBS. 6 LBS. 30 LBS.	C P C P, C
MARCH	ANNUAL RYEGRASS RYE	40 LBS. 3 BU.	– 1.5 BU.	M, P, C C	SERICEA LESPEDEZA 1/2/ HULLED BERMUDA TALL FESCUE PENSACOLA BAHIA	– 10 LBS. 50 LBS. 60 LBS.	60 LBS. 6 LBS. 30 LBS. 30 LBS.	M, P, C P, C M P, C
APRIL	ANNUAL LESPEDEZA 3/ BROWN TOP MILLET	40 LBS. 40 LBS.	10 LBS. 10 LBS.	M, P M, P, C	SAME AS MARCH			
MAY	SAME AS APRIL				SERICEA LESPEDEZA 1/2/ HULLED BERMUDA PENSACOLA BAHIA	– 10 LBS. 60 LBS.	60 LBS. 6 LBS. 30 LBS.	M, P, C P, C P, C
JUNE	BROWN TOP MILLET	40 LBS.	10 LBS.	M, P, C	SAME AS MAY			
JULY	RYE PEARL MILLET BROWN TOP MILLET	3 BU. 50 LBS. 40 LBS.	1.5 BU. – 10 LBS.	M M, P, C P, C	PENSACOLA BAHIA HULLED BERMUDA	60 LBS. 10 LBS.	30 LBS. 6 LBS.	P, C P, C
AUG.	PEARL MILLET RYE ANNUAL RYEGRASS	50 LBS. 3 BU. 40 LBS.	– 1.5 BU. –	P, C M, P M, P, C	PENSACOLA BAHIA	60 LBS.	30 LBS.	P, C
SEPT.	ANNUAL RYEGRASS RYE	40 LBS. 3 BU.	– 1.5 BU.	M, P, C M, P, C	SAME AS AUGUST			
OCT.	ANNUAL RYEGRASS RYE	40 LBS. 3 BU.	– 1.5 BU.	M, P, C M, P, C	UNHULLED BERMUDA PENSACOLA BAHIA TALL FESCUE	– 60 LBS. 50 LBS.	6 LBS. 30 LBS. 30 LBS.	P, C P, C M, P
NOV.	SAME AS OCTOBER				SAME AS JANUARY			
DEC.	SAME AS OCTOBER				SAME AS JANUARY			

FOOTNOTES:
1/ SEED WILL BE SCARIFIED.
2/ INNOCULATE SEED.
3/ M – MOUNTAIN, P – PIEDMONT, C – COASTAL

TACKIFIERS AND BINDERS TABLE

THE FOLLOWING LIST OF TACKIFIERS AND BINDERS ARE APPROVED TO ANCHOR STRAW OR HAY MULCH ON CRITICAL AREAS. A TACKIFIER MAY BE SUBSTITUTED FOR EMULSIFIED ASPHALT. THESE TACKIFIERS ARE ALSO APPROVED TO ANCHOR WOOD CELLULOSE, WOOD PULP FIBER, AND OTHER MULCH MATERIALS APPLIED WITH HYDROSEEDING EQUIPMENT.

PRODUCT OR TRADE NAME	RECOMMENDED APPLICATION RATE
A500 HYDRO–STIK	40 LB./AC.
AGRO TACK MP	PER MANUFACTURERS RECOMMENDATIONS
CONWED CON–TAC	40 LB./AC.
ECOTAK–OP ECOTAK–SATII	PER MANUFACTURERS RECOMMENDATIONS
EMULSIFIED ASPHALT	100 GAL. OF SS–1H OR CSS–1H & 100 GAL. OF WATER/TON OF MULCH
HERCULES SOILLOC–E	PER MANUFACTURERS RECOMMENDATIONS
HYDRO–BOND	35 LB./AC.
RMB–PLUS	80–120 LB./AC.
TACPAC GT	PER MANUFACTURERS RECOMMENDATIONS
TERRA–MULCH TACKING AGENT III	PER MANUFACTURERS RECOMMENDATIONS

		Date
Designed		
Drawn	B WRIGHT	11/10
Checked	J HOLLOWAY	11/10
Approved		

GEORGIA STANDARD DRAWINGS
EXCAVATED POND
PREPARED FOR: _____
COUNTY OF: _____

NRCS
Natural Resources Conservation Service
United States Department of Agriculture

File No.
ga–eng–378–pd3.dwg

Drawing No.
VEGETATION

11/10/2010
Sheet 7 of 7