CHANGE OF DIRECTION BRACING FOR CHANGES FROM 15 TO 60 DEGREES

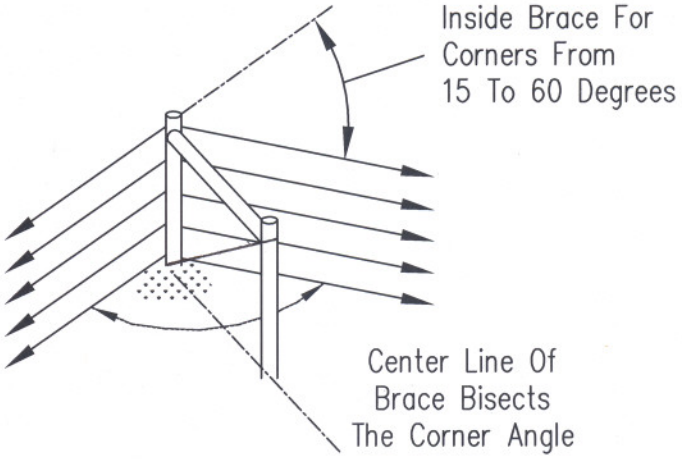

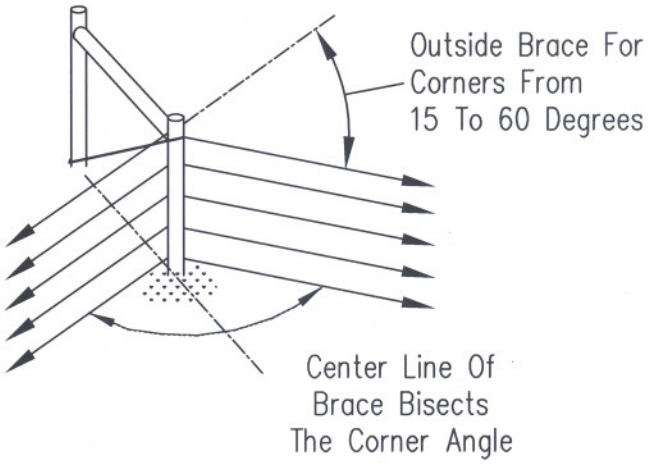

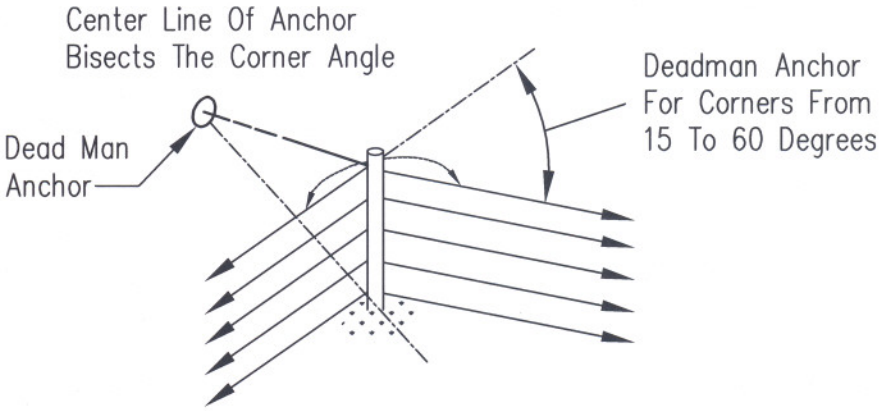

REFERENCE Project _____ Designed _____ Date _____ Checked _____ Date _____ Approved _____ Date _____	NRCS Natural Resources Conservation Service United States Department of Agriculture	STANDARD DWG. NO. IL-820 SHEET 1 OF 1 DATE 10-06