NATURAL RESOURCES CONSERVATION SERVICE
CONSTRUCTION SPECIFICATIONS

FENCE

1. General Specifications

Procedures, technical details, and other information listed below provide additional guidance and supplement the requirements and considerations of selected components of Conservation Practice Standard 382, Fence.

2. Fence Types

Standard Post and Wire Fences are the most common fence type used for controlling all types of livestock. They are suitable as permanent fences in areas that receive moderate to heavy pressure from livestock. They are typically barbed wire or double strand smooth wire.

Suspension Fences are a low cost variation of the standard post and wire fence and can be used as either boundary or interior cross fencing. They are typically used on large pastures with level terrain. They can be either barbed wire or smooth wire. The fence design allows it to sway (move) in the wind and when contacted by animals.

Woven, Net, and Mesh Wire Fences are best suited in areas where tight control is necessary, such as with sheep, goats, horses, hogs, people, or predator control. These fences consist of multiple rows of horizontal smooth wires held apart by vertical wires, usually of different sizes and configurations. Space between wires varies depending on designated use.

Permanent Energized (Electric) Fences provide a low cost alternative and more flexibility to the other types of fences. They are mostly used for interior cross fencing but can also be used for boundary fences. They can be powered by a variety of types of energizers. Livestock must be trained to respect electric fences if they are to be effective.

High Tensile, Non-Energized Fences are suitable as permanent fence in areas that receive moderate pressure from livestock. This type of fence requires more strands of wire than barbed wire to maintain the same level of control. These fences are safer for domestic animals, especially horses and wildlife, than are the barbed wire fences.

Rock Barrier Stub Fences are suitable as permanent fence around dams and ponds to extend the fence into the water. These fences start at 2 feet above water elevation and extend down to a minimum depth of 6 feet below the permanent water level.

Confined Feeding Area Fences are suitable as permanent fence where livestock is confined for the purpose of feeding. These areas are intended to confine livestock where all dietary needs are provided or delivered within the confinement. This fence type is not intended to enclose areas targeted for grazing.

Special Area Fences are suitable as permanent fence in or around PL-566 construction sites or other sites associated with PL-566 structures where the fence is critical to the protection of the site. Examples might include mitigation plantings near or within the watershed. Additional specifications for special area fences can be found in the National Engineering Handbook, Part 642.

3. Materials and Construction Specifications

The materials used in construction must be in accordance with and meet or exceed, in size, strength, durability, and lifespan, the requirements listed. The producer/cooperator/contractor is responsible for providing adequate documentation to ensure the material specifications are met.

a. Wire. All wire will be of new galvanized material, and in accordance with criteria outlined in Table 2, that follows American Society of Testing and Materials (ASTM) Standard A116 and A584.

Galvanization is critical to rust protection of wire and different classes of galvanization provide different levels of protection.

Most wire manufacturers include wire specifications on fence tags. If information is not provided or known, lab testing may be needed to determine strength of wire.

Barbed wire -

- The barbs will be 14-gauge or heavier.
- The barbs will be 2-point barbs on approximately 4-inch centers or 4-point barbs on 5-inch centers.

Woven wire - The minimum width of woven wire will be 32 inches.

Wire Splices

- **Standard wire** - Western Union splices may be used in lieu of compression fittings or splice sleeves to splice standard wire fence. The Western Union splice shall have a minimum of 8 wraps on each side of center, tightly wound, and closely spaced. Refer to fence details for standard livestock fence for additional information.

  Compression fittings or splice sleeves may be used in lieu of a Western Union splice to splice standard wire. The fittings or sleeves will have tensile strength not less than 100 percent of the wire tensile strength. Ends of the wire will be overlapped at least 2 inches with 2 sleeves fitted over wires and firmly crimped. Refer to fence details for permanent power livestock fence for additional information.

- **High tensile wire** - Compression fittings or splice sleeves that have a tensile strength not less than 100 percent of the wire tensile strength will be used to splice high tensile wire. Ends of the wire will be overlapped at least 2 inches with 2 sleeves fitted over wires and firmly crimped. Refer to fence details for permanent power livestock fence for additional information.

b. Posts. Type, height, size, and spacing of posts will be used that best meets the needs for the style of fence required and is best suited for the topography of the landscape. See Table 3 for line post criteria and Table 4 for brace assembly criteria.

Wood posts -

- Must be new, sound, and free from decay.
- The post will be reasonably straight with limbs trimmed flush or nearly flush with the body of the post.
- Except for Osage orange, all wood posts shall be treated with a preservative which is approved by either Federal Specification TT-W-571 or the American Wood Preservers Association (AWPA).
- Minimum lengths will allow for required buried depth and fence height plus at least 2 inches of post above top wire.
- If livestock deaths resulting from lightning strikes in the fence line is a concern of the client, a steel post may be installed every fourth post in the fence line. A lightning rod driven into the soil and attached to the fence line may also be used.

Steel pipe posts -

- Will be painted or galvanized for rust resistance.

- Will have the top closed to prevent rainfall from entering post.
- Minimum lengths will allow for required buried depth and fence height plus at least 2 inches of post above top wire.

Steel "T" or "U Section" posts -

- Shall be of high carbon steel weighing not less than 1.25 pound per foot of length (special area fences require 1.33 pound per foot of length).
- Will have an anchor plate and be studded, embossed, or punched for wire attachment.
- Will be galvanized, enameled and baked, or painted with weather resistant steel paint.
- Minimum lengths will allow for required buried depth and fence height plus at least 2 inches of post above top wire.

Fiberglass posts -

- Used only for electric fences.
- Will meet or exceed the requirements provided by energizer manufacturer.
- Will be a composite of marble fiberglass and polymer resin treated by thermosetting.

c. Setting posts. Posts will be set according to minimum depths provided in Tables 3 and 4. Installation shall ensure that adequate fence height is maintained based on its purpose (see Table 1).

- One standard wooden post will be set in the fence line at the top of a slope where the downward pull of the stretched fence is excessive.
- Wood posts will be set in earth only or driven.
- Steel pipe posts may be driven or set.
- Steel "T" or "U Section" posts will be driven unless the technician specifies otherwise.
- Posts to be backfilled with soil will be centered in a hole at least 6 inches larger in diameter than the diameter or side dimension of the post and thoroughly tamped in 4-inch lifts up to ground level.
- Steel or pipe posts to be backfilled with concrete will be centered in a hole that is a minimum of 12 inches in diameter. Posts will be backfilled with 4 to 6 inches of thoroughly tamped soil. Concrete backfill around the post will be rodded into place in layers not thicker than 12 inches. The hole will be completely filled and crowned (mounded) at post base with concrete to prevent water from ponding around post at ground level. The concrete will be proportioned as follows: 1 part cement, 2 parts sand, 3 parts gravel (maximum size 1½ inch). Sufficient water will be added to obtain a slump between 3 and 5 inches. The concrete will be placed around the post within 1 hour after mixing. No stress will be applied to the posts until at least 24 hours after the concrete has been poured.
- When driven, wood posts >4 inches will have end sharpened into dull point for ease of setting and to achieve a firmer setting. An auger-drilled pilot hole can be used.

d. Line post spacing and alignment. Spacing for line posts will be the same for all types of posts used. Maximum spacing is provided in Table 1.

- Spacing may need to be narrower depending on terrain and pressure from livestock.
- Lanes and areas around watering and feeding facilities will have a maximum spacing of 16½ feet.
- Line posts will be set in as straight a line as possible between corners or turns.
- When fencing along curved lines, use straight sections with appropriate in-line bracing.

e. Installation of wire. Wire will be attached on the side of the fence post receiving the most pressure.

Fence wire will be stretched to sufficient tension to allow minimal sag prior to being fastened to posts. Temperature variations must be considered (wire will tighten in cold weather and expand in hot weather) when determining the amount of tension to use.

- Suspension fence - Wire tension is critical and wires should be stretched to allow no more than 3 inches of sag between posts set at 100 feet apart and 1½ inches of sag between posts set at 50 feet apart.
- Electric fence - Wire tension will be stretched to allow no more than 3 inches of sag between posts.

All wire fences except woven wire -

- Top wire heights will be based on the intended use according to Table 1.
- Bottom wire heights will be 12 to 18 inches above the ground surface.
- Middle wires will be spaced at equal intervals between top and bottom wire.
- Fences considered as "Wildlife Friendly" for big game traffic areas, the top two wires shall be at least 12 inches apart. For areas where antelope crossing is a concern, bottom wire heights shall be 18 inches from the ground.

Woven wire fences -

- The bottom wire of a woven wire fence will be placed near ground level.
- Woven wire fences will have at least 1 barbed or smooth wire placed above the woven wire. The minimum height of the barbed or smooth wire will be at least 44 inches above the ground.
- Woven wire is not recommended where enhancing wildlife movement is a planned objective.

f. Attaching wire to line posts. The following criteria will be followed for attaching wires to line posts:

Staples -

- 9-gauge steel with a minimum length of 1½ inch for soft woods and 1 inch for hardwoods.
- Drive staples diagonally to the wood grain at a slight downward angle (upward, if pull is up) to avoid splitting the post.
- Space will be left between post and staple to allow free movement of wire and to avoid damage to zinc coating.

Manufactured Wire Clips or Wire -

- Manufactured wire clips can be used on steel or fiberglass line posts.
- Wire, 12- to 12½-gauge galvanized can be used on all line posts in lieu of manufactured wire clips or staples. Placing the line wire in a groove cut no deeper than one-quarter inch into wood posts then wiring the line wire to the post will prevent wire slippage up and down the post.
- Drilled holes, large enough for the wire to slide freely through, can be used on fiberglass line posts.

Insulators -

- Porcelain, ceramic, high quality UV stabilized polyethylene, or equivalent, insulators that meet or exceed energizer manufacturers recommendations will be used on wood and steel posts.
- Only porcelain, UV stabilized High Density Polyethylene (HDPE) or High Density Polyproylene (HDPP) insulators may be used at corner, end, pull, and brace posts or other tension points along the fence.

- Offset brackets can be attached to standard fences at intervals of 50 to 60 feet and at a height equal to 2/3 the height of the animal being controlled.

g. Attaching wire to anchor/pull posts.

- **Standard wire fences** - Wires will be attached to anchor (pull) posts by 2 complete wraps around post, stapled (wood posts), or wired (pipe posts) and ends tightly wound and closely spaced around stretched wire at least 8 times.
- **Woven or mesh wire fences** – Wires will be attached to anchor (pull) posts by 2 complete wraps around post, stapled (wood posts), or wired (pipe posts) and ends tightly wound and closely spaced around stretched wire at least 8 times. Determine amount of wire needed to fully wrap around post twice plus enough to twist around stretched wire then remove enough vertical stays to provide the length needed.

h. In-line strainers for smooth wire fences.

In-line strainers will be used to maintain tension in all smooth wire fences.

- In-line strainers will be placed near the center of the fence line between corner braces or end line braces to achieve equal tension on both ends of the wire.
- In-line strainers will be installed on each wire between each pull assembly at a distance not to exceed:

  i) 4,000 feet for straight line stretches

  ii) 1,200 feet for uneven terrain or non-straight stretches

i. Stays.

- Stays are required when line post spacing exceeds the maximum distance without stays.
- Stays will be spaced at equal distances between posts with spacing not to exceed the maximum specified in Table 1.
- Length of stays will be fence height plus 2 inches and installed so that stays swing free of the ground and allow fence to move when touched by animal.
- For non-energized fences and gates, wire stays will be the twist-on, 1-piece design constructed of 9- to 9½-gauge galvanized wire.
- For energized fences and gates, fiberglass or ironwood stays will be a minimum diameter of 1½ inch.

Refer to “Wire Gate Section” or “Line Fence Section” in fence details for standard livestock fence for additional information.

j. Crossings at depressions and watercourses. Significant elevation changes require 3-post in-line brace assemblies.

Special considerations are needed when crossing draws and watercourses to prevent washout or lifting of posts out of the ground.

Adequate anchor posts, of same kind, grade, and size of materials as in adjacent fences, are required on both sides of crossing:

Depressions -

Fence Installed Parallel to the Ground

Line posts subjected to upward pull will be adequately anchored to prevent lifting out. This may be accomplished by extra embedment such as setting the posts in concrete or the use of weights.

Fence Installed With the Top Wire Straight Across the Depression

Use extra length posts to allow normal post embedment and add wire to fill the space between the bottom of the fence and the ground.

Refer to “Crossing at Small Depressions and Watercourses” in fence details for standard livestock fence for additional information.

Watercourses -

- Where needed, floodgates will be installed either separately or attached below bottom wire and will be designed to allow water and debris to pass without damaging the line fence. Hinged or breakaway floodgates may be used.
- Energized fences may use a “Floodgate Controller” with galvanized link chains spaced 10 to 14 inches apart to a point approximately 8 inches above static water level or the ground surface. Watercourses that become dry and may not provide an adequate ground for the fence may need an additional ground wire added on the opposite side of the fence to provide a ground during dry periods.

Refer to “Crossing at Small Depressions and Watercourses” and “Flood Gate" in fence details for standard livestock fence for additional information.

k. Bracing.

Anchor/pull posts bracing – Bracing of anchor (pull) posts is required at all corners, gates, and fence ends, at certain specified distances, and at definite slope and alignment changes in the fence line.

Special area fences will not exceed 660 feet between anchor (pull) posts.

3-Post Corner Brace Assemblies –

3-Post Corner Brace Assemblies are required at all points where the fence alignment has a change of 15 degrees or more and the pull is from two directions.

A *3–Post Corner Brace Assembly* consists of an anchor (pull) corner post and 1 brace post extending in each direction of pull.

Refer to “Corner Assembly” of fence details for standard livestock fence for additional information.

***2-Post End Panel Brace* Assemblies** -

2-Post End Panel Brace Assemblies are required where fences end and on both sides of gate openings where the pull is from only one direction.

A *2-Post End Panel Assembly* consists of an anchor (pull) end post and 1 brace post extending in the direction of pull.

Refer to “End Panel” of fence details for standard livestock fence for additional information.

3-Post In-Line Brace Assemblies -

3-Post In-Line Brace Assemblies consist of an anchor (pull) post and 1 brace post extending in each direction of pull, in-line with the fence line.

- *3-Post In-Line Brace Assemblies* are required in straight sections of the fence line where the distance between anchor (pull) posts of corner brace assemblies and/or end panel brace assemblies exceeds 1,320 feet for standard fences or 660 feet for special area fences.
- *3-Post In-Line Brace Assemblies* are also required where an upward angle will require additional embedment to properly anchor the upward pull of the stretched wire. Changes in slope exceeding 10 percent are to be considered for this type of brace assembly. The center post of this brace assembly will be set as near the point where the slope breaks as possible.

Refer to “Pull Post Assembly” of special area fence details for additional design information.

Horizontal Compression Brace Member -

Refer to Table 5 for horizontal compression brace member criteria and specifications.

- Placement of horizontal brace members will be a minimum of 3 feet above the ground and 8 inches from the top of the post.
- In sands and wet areas, the length of the horizontal compression brace member will be increased from the minimum 7 feet to a length of 9 to 10 feet.

Wood Horizontal Compression Brace Members -

- The wood horizontal compression brace member will be used only on wood brace and anchor post assemblies.
- Wood posts used for horizontal compression brace members will be straight and free of splintering.
- The wood brace posts and anchor posts will be notched to achieve a secure fit.
- Wood horizontal compression brace members will be attached to the brace and anchor posts using 3/8-inch diameter steel dowel pin (4 inches long) set 2 inches into brace or anchor posts and the hold drilled as close to the rod diameter as possible.

Steel and Angle Iron Compression Brace Members -

- Steel and angle iron compression brace members may be used on wood or steel brace and anchor post assemblies.
- Steel and angle iron compression brace members will be painted or galvanized for rust protection.
- Steel and angle iron compression brace members will be welded to steel brace and anchor post assemblies.
- Steel and angle iron compression brace members will be supported by a 3/8-inch diameter steel rod (4 inches long) set 2 inches into the wooden brace and anchor posts and painted or galvanized for protection.

Diagonal Tension/Brace (guy) Wires - *(For Wood Corner and Brace Post Assemblies) -*

The diagonal tension/brace wire will consist of 2 complete loops of 9-gauge smooth wire or 2 complete loops of 12½-gauge double strand barbed or smooth wire, or a single loop of 12½-gauge high tensile, smooth wire.

The tension/brace wire will be stapled at quarter points to the brace post at a height of 4 to 6 inches above the brace member and stapled to the anchor (pull) post at a point approximately 4 inches above the ground level.

The tension/brace wire consisting of 2 complete loops will be twisted or strained to provide necessary rigidity with a twist rod that should be 18 to 24 inches long and will remain in place approximately midway along brace wire.

The tension/brace wire consisting of a single loop of 12½-gauge high tensile, smooth wire will be tightened to provide the necessary rigidity with an in-line stainer placed approximately midway along the brace wire.

I. Energizers.

Electric energizers (power fence controllers) will be installed according to manufacturer's recommendations and will meet or exceed the following criteria:

- High power, low impedance, with a minimum of 5,000 volt peak output and a pulse that is less than 300 milliamps (mAmps) in intensity, finished within 0.0003 of a second, and at a rate of 35 to 65 pulses per minute.

- Solid state circuitry and high impact weather resistant case.
- Safety pace fuse to prevent over pulsing.
- Joule rating high enough to provide a minimum shock at the farthest point as follows:

  Cattle – 4,000 volts
  Sheep and hair goats – 3,000 volts
  Horses, hogs, and meat goats – 2,000 volts

- Chargers will be properly grounded and protected from lightning according to energizer manufacturer recommendations.
- The top wire will always be hot.
- Wires will alternate hot/ground from the top wire down.

m. Gates. Gates will be designed to accommodate cooperator objectives.

Wire Gates -

- Wire gates shall be made of the same materials, kind, grade, and size specified for the field fence.
- Stays in wire gates will not exceed a 4-foot spacing.

Refer to “Wire Gate Section” and “Gate Closer” in fence details for additional information.

Other Gates - Gates constructed of wood panels, aluminum, or steel will have galvanized or painted hinges and be attached directly to a braced end/gate post.

n. Rock Barrier Stub Fences. A rock barrier stub fence section will be used to extend the fence into the water. It will start 2 feet above permanent water elevation and extend down to a minimum depth of 6 feet below the permanent water elevation. This fence should result in a low maintenance stub fence.

Construction will be according to the Rock Barrier Fence Details. Materials will be according to Engineering Material Specifications 523, Rock for Riprap.

Refer to “Rock Fence Barrier Details” for additional information.

o. Fence Marking for Prairie Grouse/Prairie-chicken. For five-wire fences, top and third wires shall be marked. Four-wire fences shall have top two wires marked. Wires shall be marked with 3-inch strips of white vinyl house siding, or similar type of marker material. Top wire marking should be every 4 feet starting 2 feet from the post. Next wire marked shall begin 4 feet from the post, or offset from the top wire marking. Lower wire will contain 1 less marking device than the top wire. Four, 7, or 9 markers per post spacing will be required for 12 to 20-foot post spacings. Fence marking should only be planned for areas adjacent to known lek’s, tops of ridges or upper hill-slopes, and areas where prairie-chickens travel frequently.

4. Locations of Fences on Dams

All fences will be located to achieve a minimum of interference to the hydraulic operation of the structure. The top wire of the fences crossing the inlet and exit channel of the emergency spillway will be at or below the crest elevation of the emergency spillway.

Structure and emergency spillway area fence - The fence will be located around the earth embankment and emergency spillway which ties into the stub fence that extends into the permanent water of the reservoir.

Frontslope fence - A front slope fence, when determined necessary, will be located across the face of the structure between the top of the dam and the emergency spillway elevation. It will tie into the fence around the dam and spillway areas near the end of the structure.

5. Variations

Variations of materials and installation must be approved by the responsible technician provided it is determined and documented that such variations will result in a fence that will meet or exceed the quality intended by the specifications. An example would be substituting limestone rock posts for wood or steel posts.

6. References and Additional Planning Tools

Planning Fences, American Association for Vocational Instructional Materials, Third Printing, 1997.

Building Fences, American Association for Vocational Instructional Materials, 1974.

Planning and Building Fences on the Farm, University of Tennessee, AES, PB1541.

Fence Brace Assemblies, Circular 792, Institute of Food and Agriculture Sciences, Rev. 1992.

ASTM Standard A116, A121, and A584, American Society of Testing and Materials.

Fences, USDA Forestry Service Handbook, February 1999.

Engineering Material Specifications 523, Rock for Riprap, National Engineering Handbook, Part 642, Specifications for Construction Contracting.

Table 1. Criteria for Selection and Installation of Fences. Fence design and construction must meet or exceed these minimum criteria.

Intended Use	Fence Type	Minimum Number of Wires or Cross Members	Average Height of Top Wire or Cross Member	Max Line Post Spacing w/o Stays	Max Line Post Spacing w/Stays	Max Stay Spacing (feet)
Cattle	Standard Barbed Wire	3	38	16½	30	10
		4	44	20 1/	30	10
	Suspension	4	44	NA	100	20
	Smooth, High Tensile, Non-Energized	5	44	20	30	10
	Smooth, High Tensile, Energized	3	38	75	150	50
		4	44	75	150	50
	Confined Feeding Area 2/ and 3/	4	48	12	NA	NA
	Special Areas Barbed Wire	4	48	16½	NA	5½
	Woven Wire (Addition of 1 to 2 barbed wires may be added to achieve total height)	NA	44	16½	NA	NA
Goats/ Sheep	Woven Wire (Caution with horned goats)	NA	38	20	NA	NA
	Standard Barbed Wire	7	38	20	30	10
	Smooth, High Tensile, Non-Energized	7	38	20	30	10
	Smooth, High Tensile, Energized	5	36	50	150	30
Horses	Woven Mesh	NA	48	20	NA	NA
	Standard Barbed Wire	4	48	16½	30	10
	Smooth, High Tensile, Energized	4	48	75	150	50
	Smooth, High Tensile, Non-Energized	5	48	20	30	10

1/ Line post spacing on lands and areas around watering and feeding facilities will have a maximum spacing of 16½ feet.
2/ Minimum diameter steel pipe for cross-members is 1½ inches.
3/ Minimum diameter steel pipe post is 3 inches and shall be set at a minimum of 3 feet in the ground. Both cross-members and pipe post shall be standard weight steel pipe (ASTM A 53, Schedule 40).

Note: Other materials used in the construction of confined feeding areas shall meet or exceed listed materials

Table 2. Minimum Criteria and Specifications for Wire

Wire Type	Minimum Wire Size	Minimum Protective Coating	Breaking Strength
Standard Double-Strand Barbed Wire	12½ gauge	Class 1 galvanized per ASTM A 121	conforms to the requirements of ASTM A 121
Standard Smooth Double-Strand Wire	12½ gauge	Class 1 galvanized per ASTM A 121	conforms to the requirements of ASTM A 121
Standard Smooth Single-Strand Wire	11 gauge	Class 1 galvanized per ASTM A 121	conforms to the requirements of ASTM A 121
High-Tensile Smooth Single-Strand	12½ gauge	Class 3 galvanized per ASTM A 121	conforms to the requirements of ASTM A 121
Special Areas Double-Strand Barbed Wire	12½ gauge	Class 3 galvanized per ASTM A 121	conforms to the requirements of ASTM A 121
Standard Woven Wire	Top and bottom wires: 11 gauge Intermediate and Stay Wires: 14½ gauge	Class 1 zinc coating or equivalent	conforms to the requirements of ASTM A 116
High Tensile Woven Wire	14½ gauge	Class 3 zinc coating or equivalent	conforms to the requirements of ASTM A 116
Mesh Wire: such as Horse-No-Climb	Top and bottom wires: 10 gauge Intermediate and Stay Wires: 12½ gauge	Class 1 zinc coating or equivalent	conforms to the requirements of ASTM A 116 At least 48 inches high, less than or equal to 2-inch by 4-inch mesh spacing.

Table 3. Minimum Criteria and Specifications for Line Posts

Line Post Type	Weight	Rocky Soils	Sandy Soils	All Other	Other
Wood	3 inches	18	30	24	Posts will have appropriate treatment for rust and deterioration. Minimum lengths will allow for minimum setting depth and fence height, plus at least 2 inches of post above top wire.
Standard Steel "T"or "U"	1.25 (1.33 for special area fence) pounds per foot of length, exclusive of anchor plates	Anchor plate must be fully into and below ground surface (Minimum length for standard area fences will be 5 1/2' and 6.0' for special area fences)			
Steel Pipe	2 inches outside diameter (OD) weighing 3.65 lb./ft. or equivalent	18	30	24	
Fiberglass "T"	1-inch cross section	18 inches or depth recommended by manufacturer, whichever is deeper.			Electric fences only.
Fiberglass Round	3/8 inch				

Table 4. Minimum Criteria and Specifications for Posts used in Brace Assemblies (corners, ends, gates, and in-line pull assemblies)

Brace Post Type	Min. Diameter/Weight	Min. Setting Depths	Other
Wood-Braced	5 inches top diameter (Corners, Ends, Gates) 5 inches top diameter (In-Line pull assemblies)	3 feet 6 inches	Soils with high shrink-swell potential tend to push posts up and out. Placing posts at a depth of at least 42 inches will minimize this potential as well as strengthen the post assembly. Posts will have appropriate treatment for rust and deterioration.
Steel, Round Pipe-Braced	Minimum 3-inch Nomimal Standard Weight as per ASTM A 53	3 feet 6 inches set in 12-inch diameter hole with concrete	
	Minimum 4-inch Nomimal Standard Weight as per ASTM A 53	3 feet 6 inches, driven	

Table 5. Horizontal Compression Brace Member Requirements for Brace Assemblies

Brace Member Type	Minimum Diameter/Weight	Minimum Length	Other
Wood	3 inches	7 feet	Brace member will have appropriated treatment for rust and deterioration.
Steel, Round, Pipe	1½ inch	7 feet	Standard weight, ASTM A 120.
Steel, Galvanized Angle Iron	2½-inch x 2½-inch x ¼-inch	7 feet	

Table 6. Criteria for Installation of 3-Post In-Line Brace Assemblies

Fence Type	Distance Between Anchor (pull) Posts (ft.)	End/Corner Brace Assembly	3-Post In-line Brace Required
Standard and Suspension - Barbed or Smooth Wire	0 - 660	Single Brace Assembly	No
	660 - 1320	Single Brace Assembly	No
	> 1320	Single Brace Assembly	Yes
Special Area Barbed Wire	0-660	Single Brace Assembly	No
	660-1320	Single Brace Assembly	Yes
Energized Electric - Smooth Wire	0 - 660	Single Brace Assembly	No
	660 - 2000	Single Brace Assembly	No 1/
	> 2000	Single Brace Assembly	Yes
Woven (net) Wire	0 - 200	Single Brace Assembly	No
	200 - 660	Single Brace Assembly	No 1/
	> 660	Single Brace Assembly	Yes

1/ Not required/may be recommended by the technician.

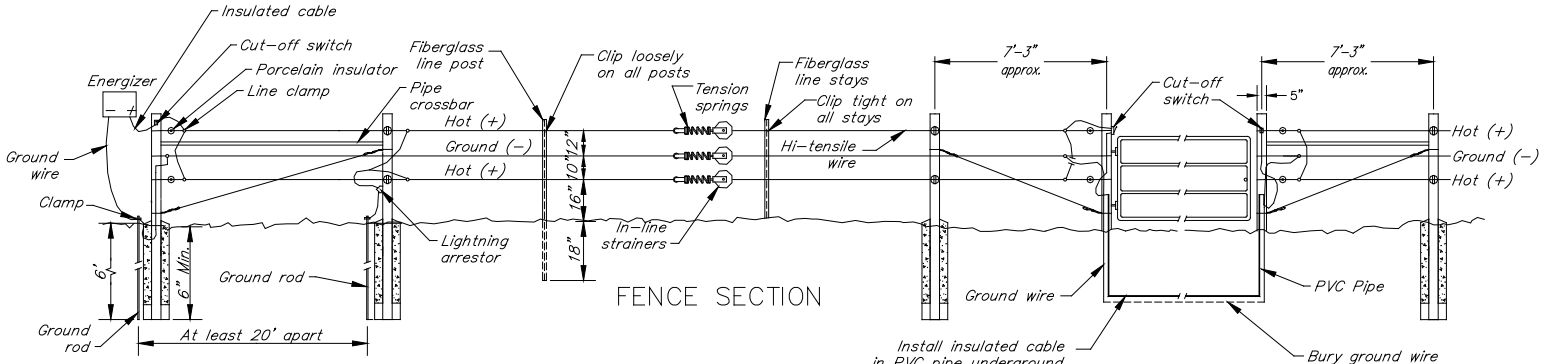

END BRACE

FENCE SECTION

GATE SECTION

NOTES:

1. Horizontal brace member may be either a single piece of std. wt. galv. steel pipe of 1 1/2" nominal dia. (1.9" O.D. 2.72 #/ft.) or a 3 1/2" line post.

2. Wire crossbraces shall consist of two complete loops of No. 9 gauge smooth wire twisted or No. 12 1/2 gauge double-strand, twisted barbed or smooth wire.

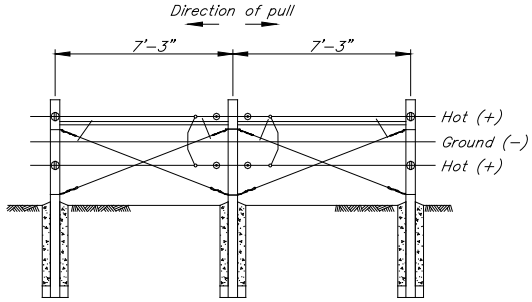

PULL POST ASSEMBLY

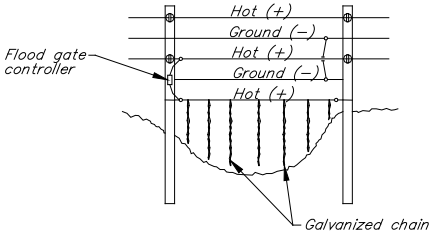

FLOOD GATE

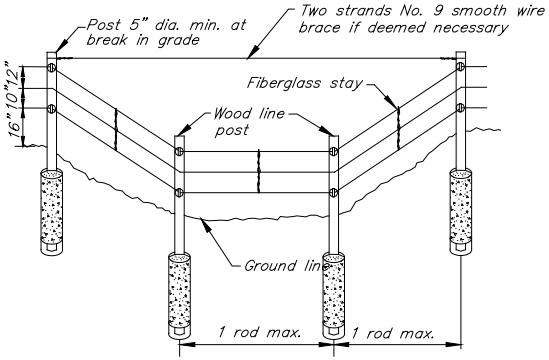

CROSSING AT SMALL DEPRESSIONS AND WATERCOURSES

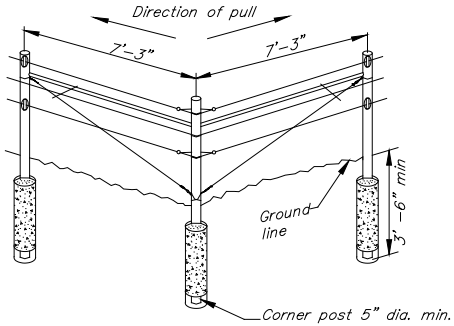

CORNER ASSEMBLY

WIRE SPLICE

FENCING DETAILS FOR PERMANENT POWER LIVESTOCK FENCE

Date
Designed
Drawn
Checked
Approved

NRCS
Natural Resources Conservation Service
United States Department of Agriculture

File Name
Drawing Name
Sheet of

1. The riprap may be equipment placed.
2. The riprap materials shall be well graded by weight within the limits stated below.

Gradation, Percentage of Stones of Various Weights (pounds)

Size	% Finer by Size
30"	100
24"	80–100
12"	40–60
8"	10–30

Earth and rock material smaller than 10 pounds shall not exceed 10 percent.

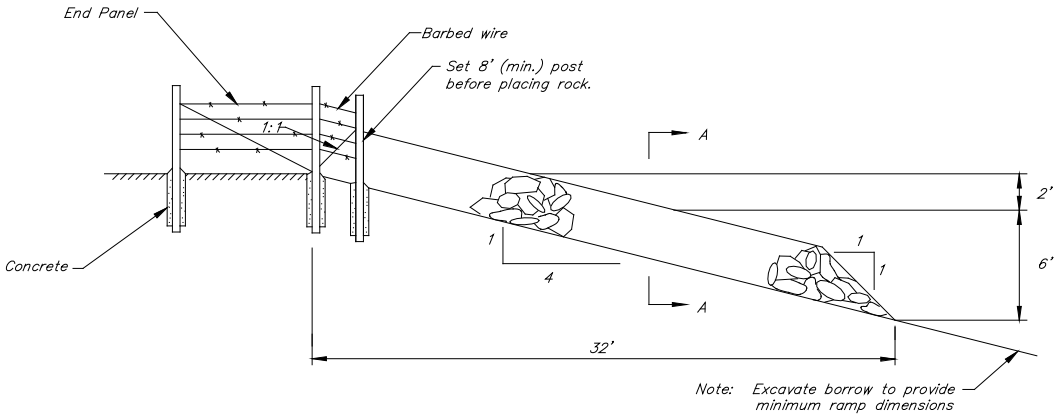

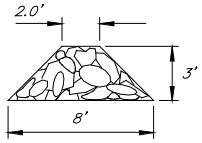

SECTION A–A

ROCK FENCE BARRIER DETAILS

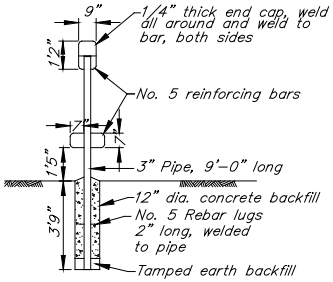

STILE DETAIL

NOTE:
Position stile so that the steps and handle are perpendicular to alignment of fence. All bar bends shown shall have an inside radius of approx. 1 1/2". Pipe for stile shall be 3" I.D. by 9' –0" standard weight steel pipe (A.S.T.M. A–120). All bar connections shall have all around fillet weld. Attach end cap to pipe with all around weld, and bar to end cap by welding both sides. Galvanize stile after fabrication. Stile locations will be designated by the engineer during the fence layout.

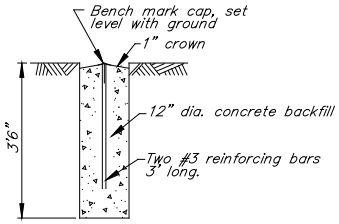

AS–BUILT MONUMENT

Designed
Drawn
Checked
Approved
Date

NRCS
Natural Resources Conservation Service
United States Department of Agriculture

File Name
Drawing Name
Sheet of

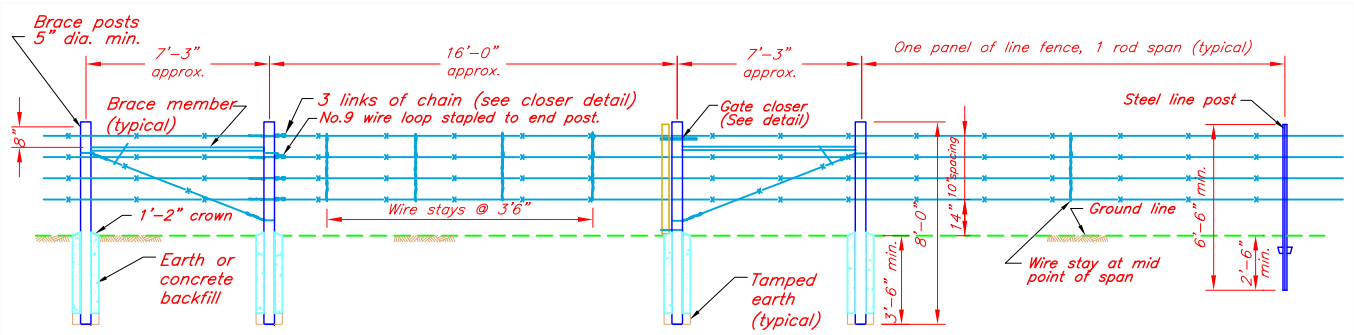

END PANEL WIRE GATE SECTION END PANEL LINE FENCE SECTION

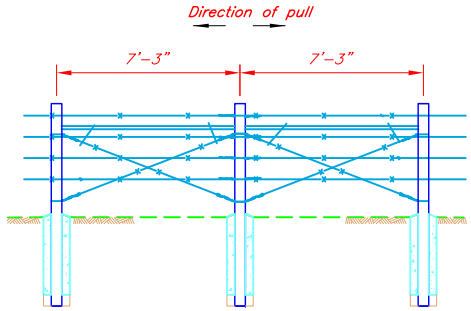

PULL POST ASSEMBLY

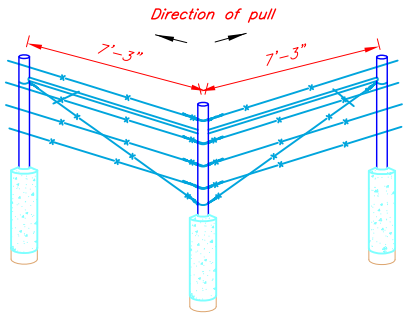

CORNER ASSEMBLY

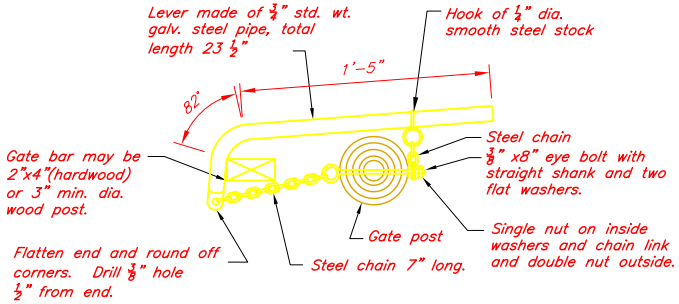

NOTE: Chain may be either straight link or twist link chain; material size, ⅛" to 5/32"; links per foot, 10 to 18, wt. per foot, 0.1 to 0.5 lbs. Use lap link as end link or cut and weld ordinary link. Weldlass twist chain will not be permitted.

GATE CLOSER

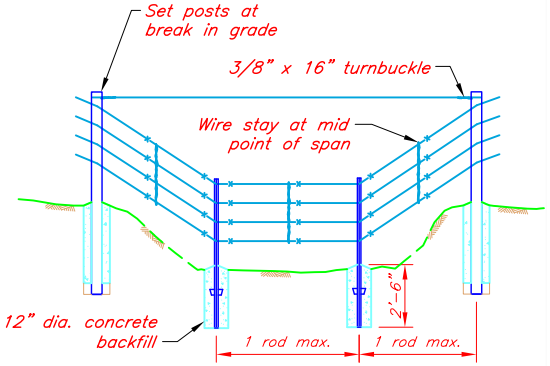

CROSSING AT SMALL DEPRESSIONS AND WATERCOURSES

NOTES:

1. Anchor steel brace to wood posts by inserting 3/8" Dia. steel rod (6 inches long) 2 inches into wood posts drilled as close to the rod diameter as possible.
2. Staple cross-brace wires to wood posts at quarter points.
3. Twist cross-brace wires with a 1/2" Galv. steel rod until the assembly is rigid. Leave the rod in position wedged against the pipe brace.
4. Barbed wire shall consist of two strands of 12 1/2 gauge, class 1 zinc coated wire with 14 gauge barbs. Barbs may be 2-point spaced at 4" or 4-point spaced at 5".
5. Brace member to be a single piece of 1 1/2" standard weight galvanized steel pipe. (A.S.T.M. A-120) or 3" wood post or 2 ½ x 2 ½ x ¼" angle iron.
6. Minimum wood post diameter shall be 5 inches.
7. When barbed wire from two different directions are tied to a single post keep loops separated.
8. Minimum setting depth of steel pipe post is dependent on soils.

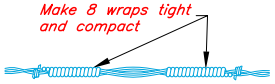

Western Union Splice shall have not less than 8 tightly-wound and closely spaced wraps of each wire end and about the other.

SPLICE DETAIL

STANDARD LIVESTOCK FENCE
(Barbed Wire)

NRCS, KS
July 2010

Date
Designed
Drawn
Checked
Approved

NRCS
Natural Resources Conservation Service
United States Department of Agriculture

File Name
Drawing Name
Sheet of