NATURAL RESOURCES CONSERVATION SERVICE
PACIFIC ISLANDS AREA

CONSERVATION PRACTICE SPECIFICATION

SEASONAL HIGH TUNNEL SYSTEM FOR CROPS (798)

FOR LOCALLY-SOURCED MATERIALS

SCOPE

The work shall consist of furnishing materials and constructing a seasonal high tunnel system meeting siting and physical dimensions as shown on the conservation plan drawings and/or staked in the field. Construction shall be in accordance with the drawings and these specifications.

SAFETY

Landowners or operators, sponsoring organizations, and contractors shall be liable for damage to utilities and damage resulting from disruption of service caused by construction activities.

It is the responsibility of the landowner or operator to determine if there are buried or overhead utilities in the vicinity of the proposed work. They shall follow proper procedures to insure that the utilities are not jeopardized and that equipment operators and others will not be injured during construction operations. They will conduct all work and operations in accordance with the proper safety codes for the types of construction being performed with due regard to the safety of all persons and property.

The Natural Resources Conservation Service makes no representation on the existence or non-existence of any utilities. Absence of utilities on the drawings is not assurance that no utilities are present at the site.

CONSTRUCTION OPERATIONS

Construction operations shall be carried out in such a manner and sequence that erosion and air and water pollution are minimized and held within legal limits.

The owner, operator, contractor or other persons will conduct all work and operations in accordance with proper safety codes for the type of construction being performed with due regards to the safety of all persons and property.

Building Permit. It is the owner's responsibility to obtain and display the appropriate building permit.

Erosion control. Runoff shall be directed away from the tunnel and maybe captured and stored for irrigation purposes. Minimum design capacity for runoff structures shall be 10 year storm frequency, 5 minute rainfall event. Runoff may empty in mounted gutter, surface or underground outlets or onto the ground surface when property protected. Provide stable outlet when design calls for tunnel cover to empty onto the ground surface.

MATERIALS AND INSTALLATION

I. Material storage. If materials are to be stored outside for more than 15 days, they shall be covered by a durable, opaque material, and vented to prevent heat buildup. Store all materials to ensure materials retain integrity and strength.

II. Frame & Framing Materials.

a. The frame supports the structure and must withstand various stresses or “loads” and should be built strong enough to withstand severe weather.

b. Dead loads are gravity loads that are constant throughout the structure's life - These include fixed equipment such as fans, or long term crops that are suspended from the frame, such as trellised tomatoes, are often considered dead loads.
c. Live loads are temporary/short term - These include wind loads or any other environmental stress.
d. Wind loads can come from any direction but usually act against the side walls by hitting them at a perpendicular angle.
    i. high tunnel structures are generally not framed to withstand gusts of 90 mph
e. Wind uplift could result in the high tunnel structure being lifted out of the ground.
    i. The lightweight hoop structure acts like an airplane wing that creates uplift when air passes over it.
    ii. To protect against uplift, ensure that posts are driven far enough into the ground or attach weights to the frame.
f. To add strength to the structure, a number of strategies can be employed.
    i. Drive posts 18 to 24 inches into the soil.
    ii. Use heavier gauge metal pipe for the ribs.
    iii. Add more than one purlin to the structure.
    iv. Decrease the spacing between the hoops - Decreasing rib spacing from 5 feet to 3 feet intervals increases the amount of load that the structure can carry by 66%.
    v. Fasten plastic glazing tightly to the structure.
g. No sidewalls or short sidewalls are stronger than structures with higher sidewalls.
h. Metal pipe is the strongest framing material for rib construction.
    i. Quality ranges from electrical conduit on the weakest end to 1.9 inch OD (outside diameter) thick steel or schedule 80 water pipe as strongest materials used.
    ii. Schedule 40 (3/4″ galvanized water pipe is commonly used but results in a 20% weaker structure compared to using Schedule 80 pipe).
    iii. Metal ribs make the structure very heavy and difficult to maneuver.
i. PVC (polyvinylchloride) plastic pipe is an inexpensive material for rib construction.
    i. This lowest cost material is one of the weakest.
    ii. PVC is lightweight and easy to maneuver.
    iii. High tunnels made from plastic hoops are more vulnerable to wind uplift.
    iv. PVC expands and contracts with temperature changes.
j. Wood is not typically used for rib construction, but is often a component of end walls, hip boards, and baseboard construction.
    i. Treated lumber should be used for baseboards and any other wood that will come in contact with the soil.

III. Covering Materials

A. Polyethylene.

a. A single layer of greenhouse-grade polyethylene 6-mil poly rated for 5 years, a plastic film, is the minimum for covering high tunnels.
b. Polyethylene glazing contains additives designed to enhance durability and performance, but these also increase cost and reduce light transmission.
c. Ultra-Violet (UV) stabilizing additives block UV light to slow degradation and hardening of plastic.
    i. Never purchase construction grade plastic because it does not contain a UV-inhibitor and will only last one growing season.
d. Anti-Fog surfactants makes poly covering less repellant to water.
    i. Condensate will sheet and run down to the sides of the structure rather than bead and drop on foliage of plants below.
    ii. Condensation may be undesirable because it decreases light intensity.
e. Photoselective films absorb or reflect a specific range of light wavelengths to manipulate plant growth.

B. Shade Cloth.

a. Shade cloth is made from knitted polyethylene strands or woven polyester, and it is water permeable, used to reduce light intensity, temperature and plant exposure to wind.
b. Black, white and various shades of green and brown can be used.
    i. White shade cloth may have a more profound cooling effect because it reflects more light than darker colors of shade cloth.
c. Shade cloth is sold by percent light blocked, 20-90% are commonly available.
d. Seasonal and crop species requirements dictate what percent shade cloth would be chosen.
e. If used in conjunction with polyethylene, shade cloth may be installed on the inside or outside of the high tunnel.

IV. Attachment Techniques

- Secure attachment of the covering material is necessary to avoid tearing and excessive wear that shortens its longevity.
- Fastening polyethylene between two boards such as the hip board and batten board is the least expensive method. However, this method may be the least secure, depending on the type of screws, spacing and installation technique.
- Wiggle wire nestled in an aluminum channel offers continuous force along the surface of plastic and is relatively easy to install. Wiggle wire is a continuously s-curving wire that is placed into the channel by “wiggling” it back and forth.
- Many channel and clip systems are manufactured; however, be aware that some designs are reported to rip the plastic at the attachment site.

V. End Wall and Side Wall Options

A. End Walls.

a. End walls offer access and ventilation for the high tunnel.
b. A major consideration for doors in the end wall design is ease of access and ventilation.
    i. Openings must be wide enough for a person to walk through with tools, supplies, or produce.
    ii. Large equipment access is also needed for roto-tiller, tractors, and other bulky equipment.
    iii. Door designs vary from manufactured storm doors, and sliding doors, to a non-framed plastic curtain.
c. To increase ventilation, some high tunnel designs utilize completely removable end wall sections.
    i. If end walls are removable, sufficient structural support must be maintained.
    ii. Large screen sections, windows, and winged panels can also be installed in end walls for ventilation.

B. Side Walls.

a. Either fixed or roll-up side walls designs can be constructed.
b. Roll-up side walls offer a simple way to manage temperature and promote ventilation.
    i. Ventilation is accomplished by rolling up the sides and allowing warm air to dissipate to the outside.
    ii. Temperature can be further manipulated by such actions as rolling up each side wall to different heights at different times of the day.
    iii. There are many designs for hand-powered handles and cranks that can be inexpensively installed to roll up the length of the plastic wall.

CERTIFICATION

The job site shall have a neat appearance when finished. All disturbed areas not graveled or paved will be vegetated to control erosion as per the drawings. The manufacturer or installing contractor of the

seasonal high tunnel shall furnish a written guarantee that protects the owner against defective handiwork and materials for not less than one year. Written guarantee shall also state that the installation and/or materials meet NRCS Practice Standards and Specifications.

BASIS OF ACCEPTANCE

The acceptability of this practice shall be determined by inspections during and following construction to ensure compliance with all provisions of this specification and the construction drawings.

REFERENCE

http://hightunnels.org/materials-construction/

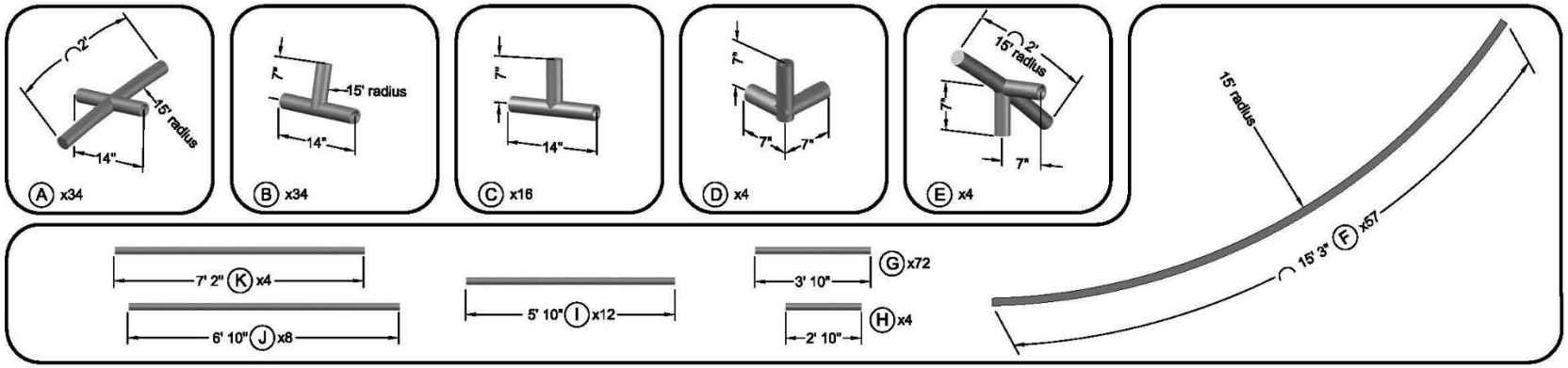

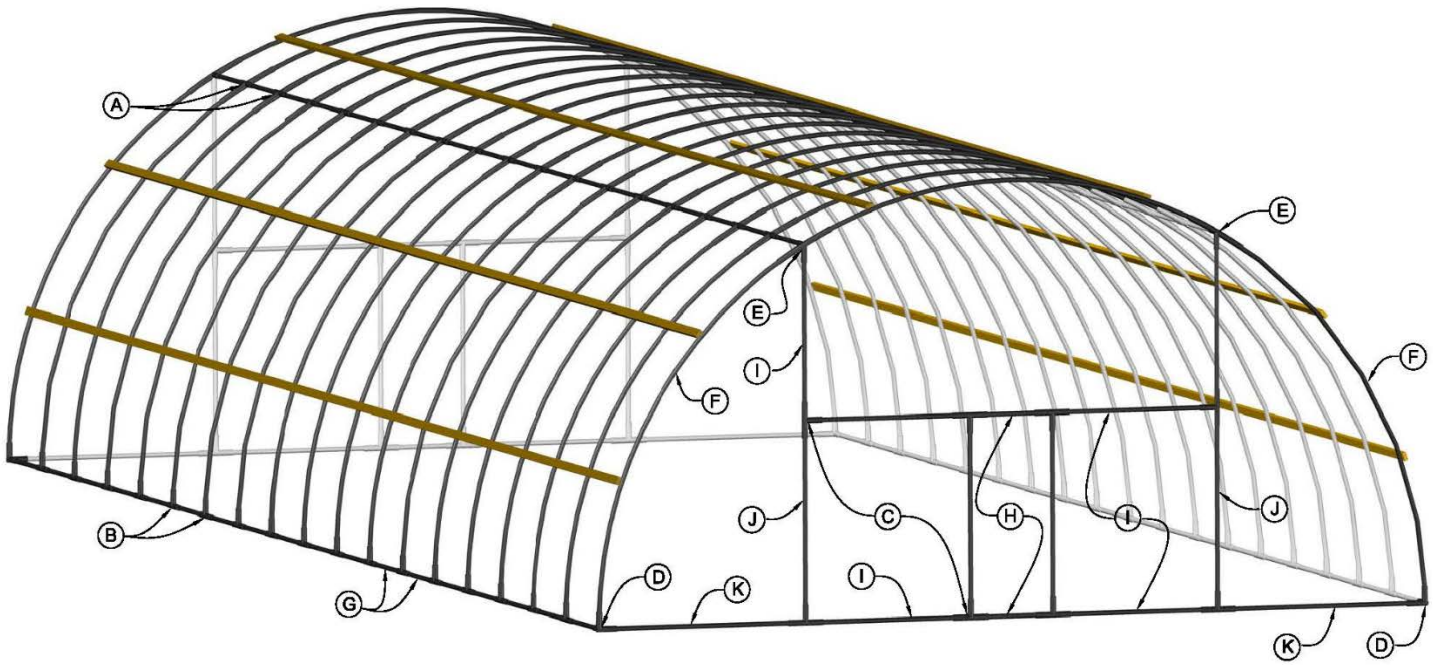

Figure 1. Parabolic seasonal high tunnel example

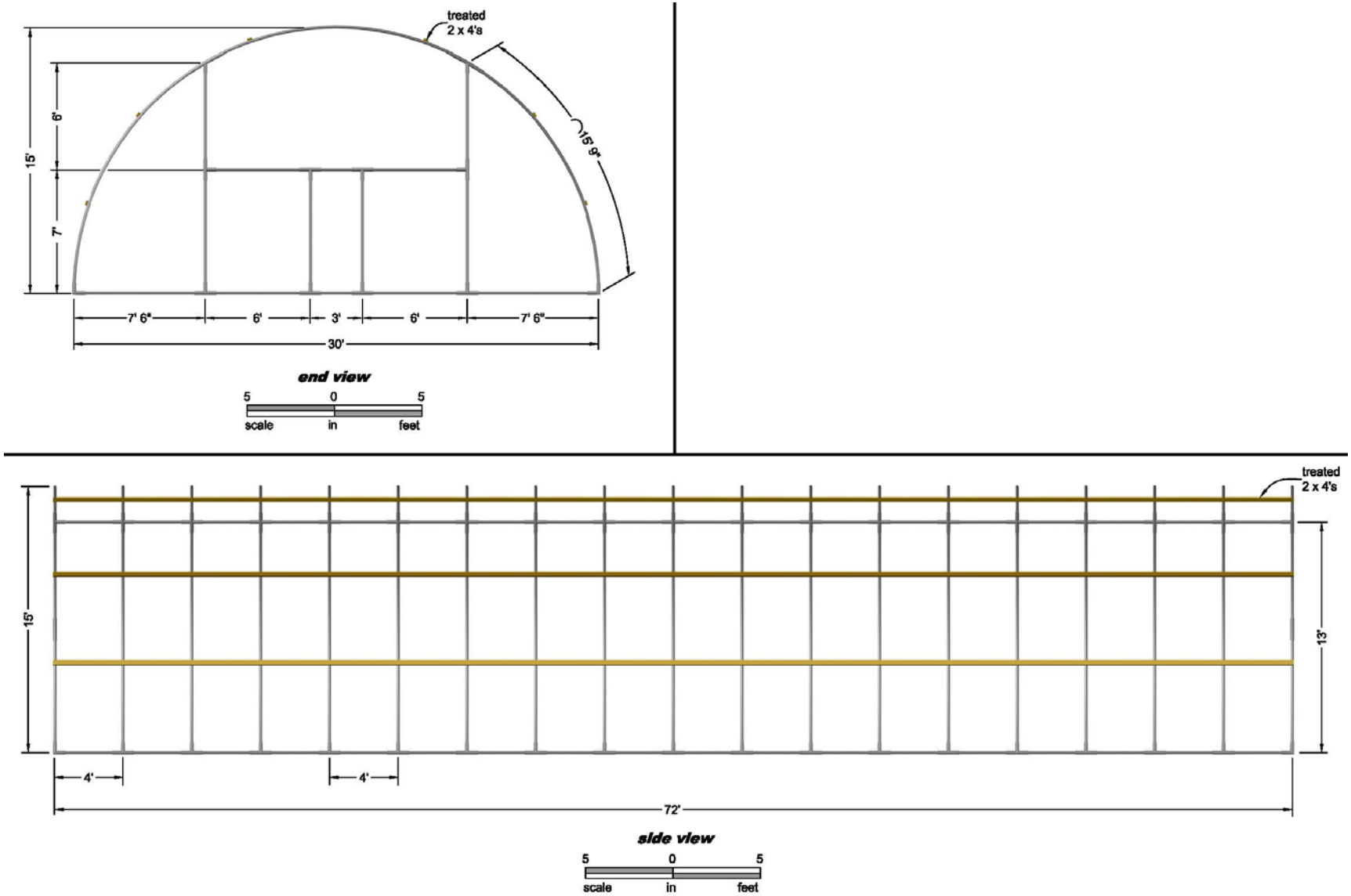

Figure 2. End and side view example of parabolic seasonal high tunnel