NATURAL RESOURCES CONSERVATION SERVICE

CONSERVATION PRACTICE GENERAL SPECIFICATIONS

Fence

(Feet)
CODE 382

Locate fences to help facilitate management of different landuses and special management areas within landuses such as ecological sites, pasture types, riparian areas, critical eroding areas, etc.

For domestic livestock, install fences in areas that will best facilitate the handling, feeding, watering and movement of the type of livestock managed.

For horses, consider avoiding the use of barbed wire and steel Tee (T) posts when possible in order to minimize potential injury, especially when areas of confinement are small.

Consider introducing animals to electric fencing in a designated training facility. Select a well fenced area and construct an electric fence across or around the area to allow animals to come in contact with the electric fence. Normally, a minimum 12 hour exposure to the electric fence is required. Most animals will be trained in 48 hours.

When installing fences in areas of heavy wildlife movement / traffic (such as riparian areas) consideration should be given to wire types and spacing. Spacing of top and bottom wires should be adequate for the movement of the types of wildlife managed for. Where white-tailed deer range, and the height of fence is less than 48 inches, space the top two wires 10 inches apart to reduce the hazard of catching deer in the fence. However, if 47 inch net wire is used, consider not using another wire. Where barbed wire is used, the cooperator may choose smooth wire as the top wire to reduce potential for harm to deer jumping over a fence.

Where applicable, right-of-ways may need to be established for the facilitation of fence installation and maintenance.

In order to minimize maintenance and installation costs, where practical, avoid areas such as rough and irregular terrain, excessive trees and brush, areas with long-standing water, and water crossings.

Consider fencing along the contour to minimize livestock trailing and subsequent erosion.

When installing interior fences to facilitate livestock movement, temporary fences may be considered in order to minimize costs and allow for flexibility in the system. Locations should allow for the shortest and straightest distances.

FENCE TYPES

There are several types of fences used in Texas. They can be designed and installed as permanent or temporary. The overall effectiveness of each type of fence and the costs for installation and maintenance, depends on the type of animal controlled, the number and size of wires used, and posts type, and spacing.

Permanent fence types are designed to be in place for a period of many years with minimal maintenance requirements. Therefore, components are designed for a life span of 15 – 25 years. Permanent fences are used for exterior (boundary) fencing of property and fencing of specific landuses (such as cropland) as well as for interior division fencing.

Temporary, or moveable fences, are designed to be in place for short periods of time. Temporary fences are best used as division fences for controlled grazing and fencing of areas where livestock exclusion is needed for periods of 60 days or less.

Standard Post and Wire Fences are the most common fence type used for controlling all types of livestock. They are suitable as permanent fences in areas that receive moderate to heavy pressure from livestock. They are typically barbed wire or double strand smooth wire.

Suspension Fences are a low cost variation of the standard post and wire fence and can be used as either boundary or interior cross fencing. They are typically used on large pastures with level terrain. They can be either barbed wire or smooth wire. The fence design allows it to sway (move) in the wind and when contacted by animals.

Both Hi-tensile and non Hi-Tensile Woven, Net and Mesh Wire Fences are best suited in areas where tight control is necessary such as with sheep, goats, horses, hogs, people or predator control. These fences consist of multiple rows of horizontal smooth wires held apart by vertical wires, usually of different sizes and configurations. Space between wires varies depending on designated use.

Permanent Energized (Electric) Fences provide a low cost alternative and more flexibility to the other types of fences. They are mostly used for interior cross fencing but can also be used for boundary fences. They can be powered by a variety of types of energizers. Livestock must be trained to respect electric fences if they are to be effective.

Temporary Electric Fences are only used for interior cross fencing and areas where pressure from livestock is not heavy. They can be easily attached to permanent fences and can be of either high tensile smooth wire, net fencing (for use with sheep and goats), or polyethylene twine and/or tape.

High Tensile, non-energized fences are suitable as permanent fence in areas that receive moderate to heavy pressure from livestock but require more strands of wire than barbed wire to maintain the same level of control. These fences are safer for domestic animals, especially horses, and wildlife, than are the barbed wire fences.

Board Fences are recommended in areas where the main concerns are safety and aesthetics. Costs of installation and maintenance are higher than most other types of fencing. They are best suited for control of horses and when used for corrals and barn lots.

Other Fence Types include chain link, pipe, vinyl, galvanized panel and cable fences. These fences are generally more expensive to install and maintain. They are generally used around corrals and homesteads. They may be used to restrict access to unsafe areas such as lagoons, abandoned mines and other unsafe or sensitive areas. When used for livestock control, they will be designed based on the type of animal controlled.

MATERIALS AND INSTALLATION SPECIFICATIONS

The materials used in construction and installation of fences must be in accordance with and meet or exceed, in size, strength, durability and lifespan, the requirements listed in the Fence (382) Specifications.

VARIATIONS FROM MATERIALS AND CONSTRUCTION MAY BE APPROVED IF SUFFICIENT DOCUMENTATION IS PROVIDED WHICH PROVES THAT THE VARIATIONS WILL RESULT IN AN INSTALLATION THAT WILL MEET OR EXCEED THAT WHICH IS DESCRIBED IN THIS FENCE STANDARD AND SPECIFICATIONS.

Electric fence materials and installation requirements can be found in Appendix A.
Various figures of fence design and components mentioned throughout the specifications can be found in Appendix B.

Fence Construction Check-sheets for Electric and Non-electric fence are shown as Attachments 1 & 2.

I. WIRE

All wire will be of new galvanized material and in accordance with criteria outlined in Table 1 which follows ASTM - A 116 (woven wire), and/or ASTM-121 (barbed wire) standards.

Galvanization is critical to rust protection of wire and different classes of galvanization provide different levels of protection. Wire with Class I and Class III galvanization meets the minimum level of treatment required to protect the wire from rust for the expected life span. Wires designated as regular, commercial and utility grade are available but do not offer the level of treatment to prevent rust.

Most wire manufacturers include wire specifications on fence tags. If information is not provided or known, lab testing may be needed to determine strength of wire.

A. WIRE INSTALLATION

Fence wire will be stretched to sufficient tension prior to being fastened to posts. Temperature variations must be considered (wire will tighten in cold weather and expand in hot weather).

For suspension fences, wire tension is critical and wires should be stretched to allow no more than 3 inches of sag between posts set at 100 feet and 1.5 inches for posts at 50 feet.

Wherever possible, wire will be attached to fence post on side receiving most pressure, at top wire heights based on intended use (Table 1). Wires below top wire will be spaced at equal intervals depending on animal to be controlled. Wires will be installed from top wire down.

Boundary and exclusion fences shall be constructed so that the wire is on the side of the post facing the animals to be controlled. Wire may be on either side of the post when cross fencing.

B. WIRE ATTACHMENTS

The following criteria will be followed for attaching wires to all posts:

1. ***Wire clips***

- Wire clips should be 12 – 12 ½ gauge galvanized.
- Wire clips or drilled holes could also be used for fiberglass posts.
- Wire clips or fasteners must be galvanized and similar to strength of fence wire.

2. Staples

- 9-gauge steel staples with a minimum length of 1½ inches for soft woods (pine) and 1 inch for hardwoods (cedar, oak, mulberry, mesquite, black locust and Osage orange).
- Drive staples diagonally to the wood grain at a slight downward angle (upward if pull is up) to avoid splitting the post.
- Space will be left between post and staple to allow free movement of wire and to avoid damage to zinc coating.

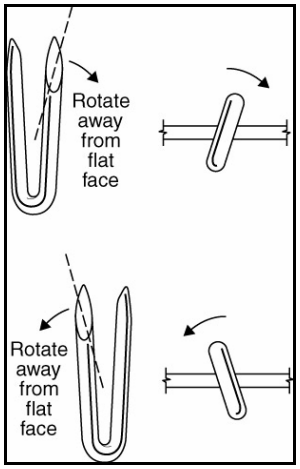

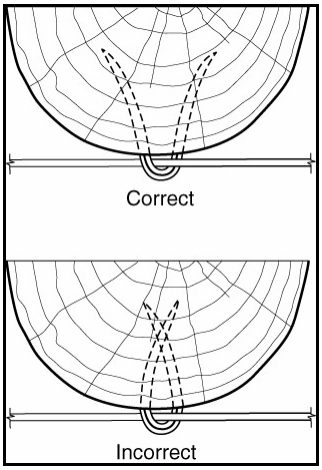

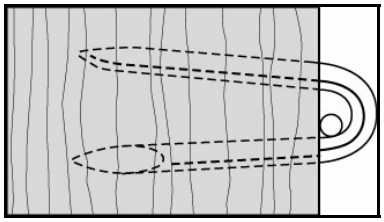

- See figures above to view the proper use of staples for fence construction.

3. Wire Splices

- Standard Wire - Western Union splices, as shown below, shall have a minimum of 8 wraps on each side of center, tightly wound and closely spaced.

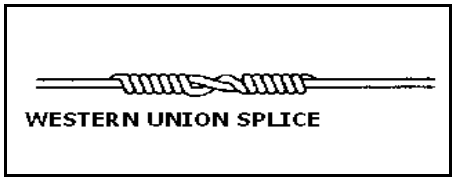

- Standard and High Tensile Wire - Compression fittings or splice sleeves will have a tensile strength not less than 80% of the wire. Ends of wire will be overlapped at least 2 inches with two sleeves fitted over wires and firmly crimped.
- Standard wire may also have “loop” splices where the wire has a minimum of 8 wraps on each side. (Western union is the preferred method, followed by compression fittings, but “loop” splicing is acceptable).
- High Tensile Wire – “The Figure 8”, as shown below, can be used by overlapping wires 2 inches, looping each wire over and back through, then pulling together. As fence is stretched, the splice will tighten.

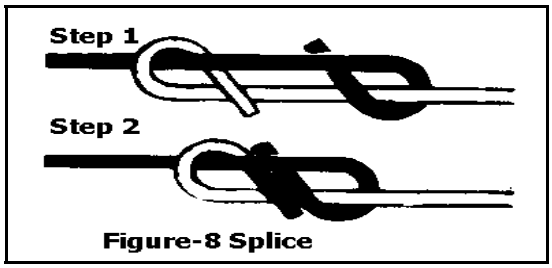

4. In-Line Strainers

- Used to maintain tension in permanent, high tensile steel, smooth wire fences.
- Will be placed near center of fence line to achieve equal tension at both ends of the line.
- Should be installed on each wire between each pull assembly and a distance not to exceed:
  - 4000 feet for straight line stretches
  - 1200 feet for uneven terrain or non-straight stretches.
- See illustrations below to view what one acceptable In-line Strainer looks like and the strainer's proper placement on the fence:

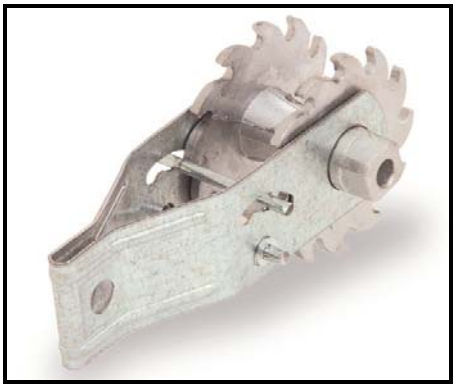

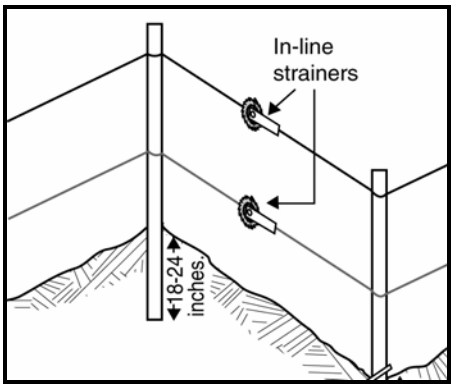

II. POSTS

Type, height, size, and spacing of posts will be used that best provides the needs for the types of fences required and is best suited for the topography of the landscape. See Table 1 for line post criteria and attached diagrams for brace assembly criteria.

A. POST MATERIALS

1. Wood Posts

In order for wooden posts to be used, the following criteria must be met:

- Must be sound and free from decay
- Except for cedar, mesquite, Osage orange, catalpa, and black locust, all wood posts shall be new and treated with pentachlorophenol, creosote or chromated copper arsenate (CCA) by a method to ensure that complete penetration of the sapwood is obtained. Telephone poles that are in good condition and meet or exceed the length, width and treatment requirements are also approved.
- Common treatments for Pine and Oak species is as follows:

Treatment	Retention lb/ft3
creosote coal tar	6.0
pentachlorophenol	0.3
chromated copper arsenate	0.4

- Minimum lengths will allow for required buried depth and fence height plus at least 2 inches of post above top wire for wire fences (to the top board of board fences).

2. Steel pipe posts

In order for steel pipe posts to be used, the following criteria must be met:

- Will be painted or galvanized for rust resistance and components will be repainted if rusting occurs.
- Will have the top permanently capped to prevent rainfall from entering the post.
- Minimum lengths will allow for required buried depth and fence height plus at least 1 inch of post above top wire for wire fences.

3. Steel "T", "Tee" or "U Section" posts

In order for Steel "T", "Tee" or "U Section" posts to be used, the following criteria must be met:

- Shall be of high carbon steel weighing not less than 1.25 pounds per foot of length, exclusive of anchor plate. ("T" posts that are 1.33 lbs/ft are preferred)
- Will have an anchor plate and be studded, embossed, or punched for wire attachment.
- Will be new, galvanized, enameled and baked, or painted with weather resistant steel paint and components will be repainted if rusting occurs.
- Minimum lengths will allow for minimum setting depth and fence height plus at least 2 inches of post above top wire.
- Buried depth will be approximately 15 -18 inches. Anchor plate must be fully into and below ground surface. .

4. Other Posts / Materials

In order to use other posts or materials not specified in the Fencing Standards and Specifications, the following criteria must be met:

- Posts or materials are only used when it can be documented that they meet or exceed the strength, durability and longevity of the posts specified above.
- All metal components used must be new, painted with a durable permanent rust resistant coating or be galvanized; components will be repainted if rusting occurs.

B. TYPE OF BRACE ASSEMBLIES

Braces determine the structural soundness and longevity of any fence line. Corners are braces that are located where there are changes in fence direction due to slope and alignment changes in the fence line. If any brace fails, there is a loss of wire tension and fence effectiveness. Design and spacing are determined from factors such as number of wires used, type of wire, soil type, terrain and animals to be restrained.

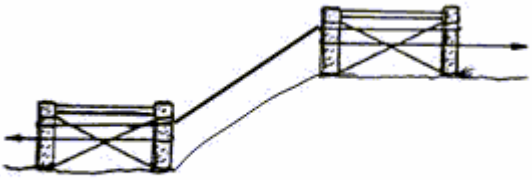

Braces on the top and bottom of steep slopes.

Fence braces fail because of structural failure, soil movement or failure or corner or end post pullout. Structural failure of an end brace is usually due to improper design, poorly selected materials, or over-stressed members. By carefully designing fence braces and properly proportioning and sizing the members, structural failures can be all but eliminated. Fence braces also fail when the soil is too weak to support the load, which allows the fence brace to move through the soil. Soil failures can usually be eliminated by using larger posts or by applying plates. Corner post pullouts, when braces lift out of the ground, can be eliminated by using longer fence braces and placing cleats on the post.

Bracing of anchor (pull) posts is required at all corners, gates and ends of the fence line. They are also needed at slope and alignment changes of the fence lines. See figures for selection criteria and design specifications of single and double brace assemblies.

2. IN-LINE PULL (H-BRACE) POST

In-Line Pull Post assemblies are located in straight sections of the fence line and where there are sudden changes in elevation, such as the bottom and top of steep slopes. An In-Line Pull (H-Brace) Post assembly may be a Single Post Pull Assembly, H-Brace Pull Assembly or a Three-Post Welded Pull Assembly. Refer to ***Figures 9*** & ***10***: H-Brace and Single Post Pull Assemblies and Three-Post Welded Pull Assembly for further descriptions of the various Pull Post Assemblies available.

a. Wood - On single H-Braces, a minimum of 4 inch top diameter of treated timber or durable wood listed above for upright post and a 4 inch diameter for the horizontal cross post.

b. Steel- Minimum 2-3/8 inches outside diameter (OD) metal pipe or equivalent. Steel cross-post must be a minimum of 2-3/8 inches OD.

c. Spacing for non-electric fences between pull posts or pull post assemblies may be the length of the spool (normally 1320') on straight pulls on flat topography or at corners and points of extreme changes in slope and at curves.

3. CORNER and END/GATE POST

Corner Braces are required at all points where the fence alignment has a change of 20 degrees or more and the pull is from two directions. Braces should be used when the angle of the fence changes more than 20 degrees and/or when the slope change is greater than eight (8) percent (Strongly sloping).

End braces are required where fence ends and on both sides of gate openings.

a. Wood - (Pressure treated or durable wood) shall have minimum top diameter of 6 inches, 8 ft. in length, and be set firmly 3 ft. in the ground. Cross post will have a minimum 4 inch top diameter.

b. Steel - Minimum 2-3/8 inch steel pipe or equivalent, 8 ft. in length, set 3 ft. in ground. Steel cross-posts must be a minimum 2-3/8 inch diameter.

c. Braces where angle of the fence changes more than 20 degrees can be an H-Brace or a Steel Welded Single Post End/Angle (Diagonal) Brace. See ***Figure 3***.

d. Allow newly-installed braces and assemblies to settle and/or pack dirt sufficiently around all post; do not over-tighten wires.

e. **Figures 1** through ***6*** are illustrations of various Corner and End/Gate Post Braces used for construction of fences. ***Figure 1*** is the Welded Steel 3-Post Diagonal End Brace Assembly. ***Figure 2*** is the Single (1) Post Corner or Angle Brace Assembly. ***Figure 3*** is the Steel Welded Single Post/End Corner Brace. ***Figure 4*** is the Two (2) Post End Brace with Deadman Brace. ***Figure 5*** is the Three (3) Post Corner Brace with Optional Deadman. ***Figure 6*** is the Five (5) Post Corner Brace with Optional Deadman.

4. ANCHOR POST

Water Crossings require adequate anchor posts of the same kind, grade and size of materials as adjacent fences on both sides of the water crossing. Special considerations are needed when crossing draws and water crossings to prevent washout or uplifting of posts out of the ground:

- For crossings wider than 20 feet, use the **End Brace** guidance. This guidance requires a single brace assembly (H brace) or single post brace (a single post with an angle brace).
- Where needed, flood gates will be attached below bottom wire and will be designed to allow water and debris to pass and still control livestock. Some type of hinged or breakaway floodgate works best.

Attaching wire to Anchor / Pull Posts - For standard wire fences, wires will be attached to anchor (pull) posts by two complete wraps around post, stapled (wood posts) or wired (steel posts) and ends tightly twisted around stretched wire at least six times.

For woven or mesh wire, determine amount of wire needed to fully wrap around post twice then remove enough vertical stays to provide the length needed. The wire ends are then attached as described above.

The figure below shows the proper way of attaching wire to anchor or pull posts if a deadman is not used:

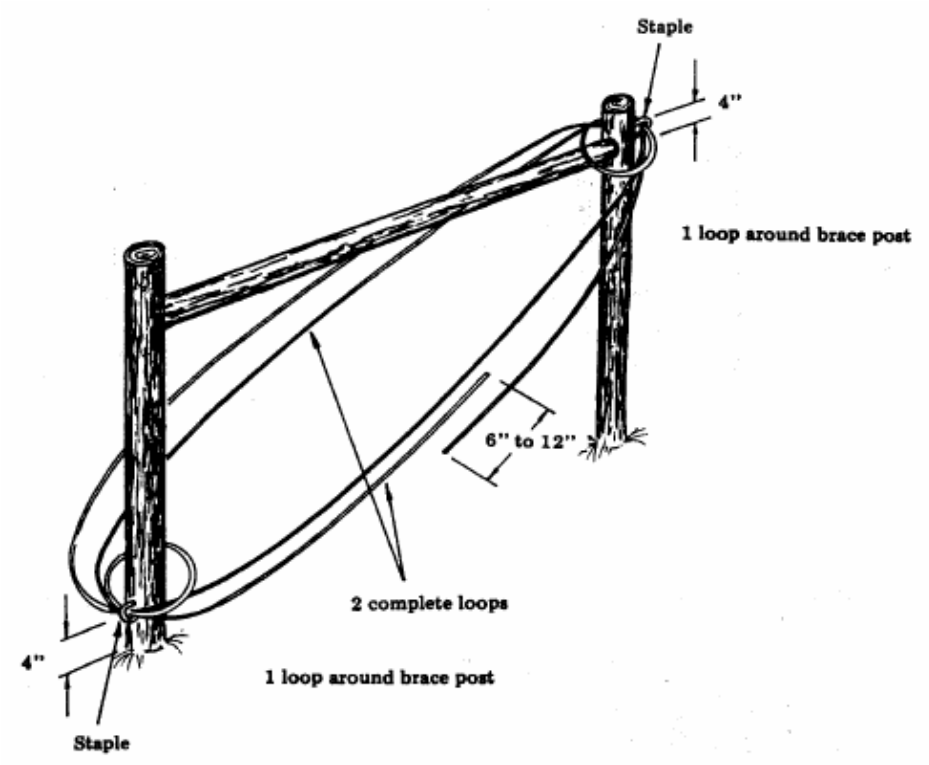

C. SETTING POSTS

1. When backfilled with dirt, posts will be centered in a hole at least 6 inches larger in diameter than the diameter of the post and tamped in 4 to 6 inch lifts up to ground level.
2. When backfilled with concrete, posts will be centered in a hole that is a minimum of 12 inches in diameter. The hole will be completely filled and crowned (mounded) at post base to prevent water from ponding around post at ground level.
3. When driven, wood posts greater than 4 inches will have an end sharpened into a dull point for ease of setting and to achieve a firmer setting. An auger-drilled pilot hole can also be used.
4. All dug post will be set at a depth of 3 feet. Driven post will be as follows:

Pipe Size	**Depth Driven**
2 3/8 in.	5 ft.
2 7/8 in.	4 ft.
5 + in.	3 ft.

5. **HORIZONTAL BRACES (H BRACE)**

- Horizontal Braces (H Brace) are the most commonly used design in the construction of post braces. An example of a H Brace is shown below:

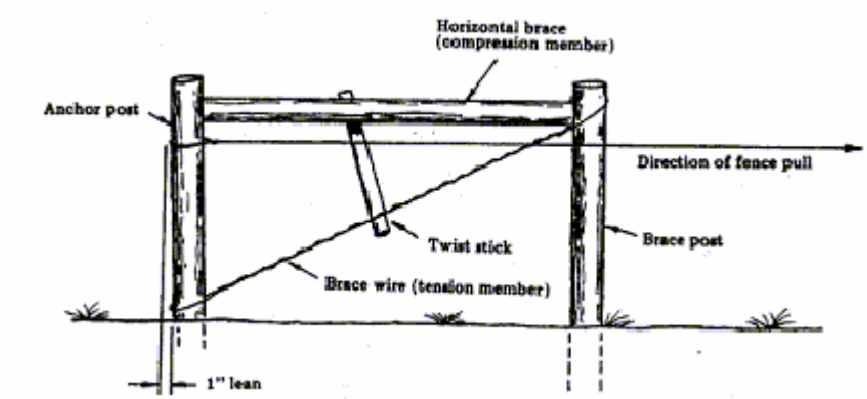

- Placement of the Horizontal brace should be a minimum of 2/3 height of the top wire height and no higher than 8 inches from the top of the post (See ***Figure 4***).
- Diagonal braces will be attached to brace post a minimum of 6 feet from anchor post and set into concrete as specified for steel pipe posts or attached to a steel reinforced concrete block (See ***Figure 3***).
- For slip braces, the steel reinforced concrete block must equal or exceed 225 square inches of surface area (Cinder pads are unacceptable).
- The slip brace must be at least 3 ½ inches width. (See ***Figure 8***)
- Wood posts used for horizontal braces will be straight and free of splintering. The brace post and anchor posts should be notched to achieve a secure fit and the horizontal brace should be attached using screws, nails, or steel dowel pin (drilled to fit, and at least 2 inches into each post).
- Steel and angle iron members will be installed into a ¾ - 1 inch notch in brace posts.
- All steel assemblies will be welded and painted for rust protection.

6. **Tension / Brace (Guy) Wires (where applicable)**

- Two complete loops of 9-gauge smooth wire, 12½ gauge double strand barbed or smooth wire or 12½ gauge high tensile smooth wire.
- Wire will be twisted or strained to provide necessary rigidity with a twist rod that should be 18-24 inches long and will remain in place approximately midway along brace wire.
- For horizontal braces, brace wire will be double wrapped and stapled to brace post at a height 4-6 inches above brace member and anchor (pull) post at a point 4 inches above the ground level.
- If a deadman is used, the tension wire extending to the deadman must be one continuous loop.
- An illustration of a tension wire being used for the H Brace is shown below:

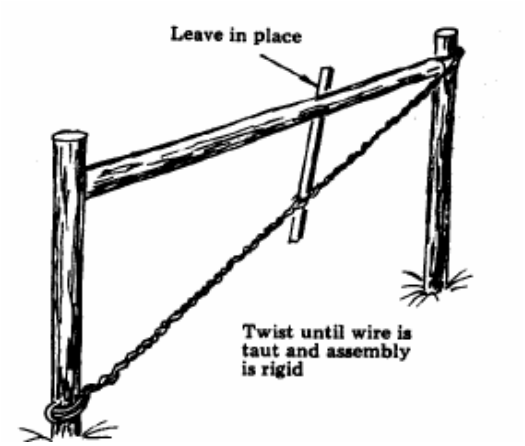

7. **Deadman Brace**

   Deadman braces can be used as an alternative to a second brace in double brace assemblies. Use 1/2 inch or larger painted rebar or screw anchor for corrosive soils. A single H-brace may be used without a deadman if the length of pull is less than 300 feet and H-brace posts are buried 36 inches OR 600 feet and the H-brace posts are buried 42 inches. ***Figure 4*** shows a Deadman Brace being used for a Two-Post End Brace and ***Figure 5*** shows Three-Post Corner Brace with Optional Deadman.

D. LINE POSTS

1. Shall have a minimum length of 6 ft.; be set approximately 24 inches in the ground (18" in rocky soils).
   - Untreated wood (Cedar, Osage orange, mesquite, catalpa, or black locust) having a minimum top diameter of 3 inches.
   - Pressure treated wood (Pine most commonly available) with a minimum top diameter of 2-1/2 inches. Wood preservation treatment shall be in accordance with Federal Specifications No. TT-W-571i (.4 retention).
   - Steel - Standard T or U section steel post (1.25 lbs/ft) or equivalent metal rod or pipe. Galvanized steel post will be used in low-lying wet areas and/or wetlands. (5 ½ foot length can be used in rocky soils set approximately 18 inches in the ground).
2. Spacing for line posts will be the same for all types of posts. Maximum spacing is provided in Table 1.
3. Spacing may need to be narrower depending on terrain and pressure from livestock. Lanes, holding pens, areas around watering and feeding facilities as well as property boundaries will have a maximum spacing of 20 feet.
4. Installation shall ensure that adequate fence height is maintained based on its purpose.
5. Line posts will be set in as straight a line as possible between corners or turns.
6. Post should be set at definite slope and alignment changes. Posts that are set in low areas or gullies need to be weighted down to prevent lifting out. Using weights (rocks, blocks) or setting post in concrete can do this.

E. STAYS

1. When line post spacing exceeds the maximum without stays, stays will be included and spaced at equal distances between posts with spacing not to exceed the maximum specified in Table 1.
2. Length of stays will be fence height plus 2 inches and installed so that stays swing free of the ground and allow fence to move when touched by animal.
3. Stays will be constructed of durable materials designed for this purpose.

F. GATES

1. Gates will be designed to accommodate cooperator objectives.
2. Wire gates shall be made of the same materials of the same kind, grade and size specified for the field fence and stays will not exceed a 4-foot spacing.
3. Gates constructed of wood, panels, aluminum or steel will have galvanized or painted hinges and be attached directly to a braced end / gate post.
4. Gates for energized fences shall be installed according to manufacturer's recommendations.

REFERENCES AND ADDITIONAL PLANNING TOOLS

Planning Fences, American Association for Vocational Instructional Materials, Third printing, 1997

Building Fences, American Association for Vocational Instructional Materials, 1974

Planning and Building Fences on the Farm, Univ. of Tennessee, AES, PB1541

Fences That Work: Temporary Electric Fence Materials Evaluation, David R. Pratt, LIVESTOCK AND RANGE REPORT NO. 903, Winter 1990

Fence Brace Assemblies, Circular 792, Institute of Food and Agricultural Sciences, Rev. 1992

ASTM STANDARD 116, 121.

Fences, USDA Forestry Service Handbook, Feb. 1999

B.C. Agriculture Fencing Handbook, B.C. Ministry of Agriculture, Food and Fisheries, 2002

Fence Standard and Specifications, 382, Texas 2001, Oklahoma 2001, Louisiana 2001

Table 1. Criteria for selection and installation of fences. Fence design and construction must meet or exceed these minimum criteria.

	Kind of Fence	Galvanized Wire (New Only)				Maximum Line Post Spacing			
Kind of Grazing Animal 10/	Non- Electric 11/	Electric	Gauge 1/	Type	Minimum Number of Wires	With 2 or More Stays	Without Stays 7/	Average Height of Top Wire	Wire Spacing
Cattle/ Horses	Barbed		12 ½	Malleable	4	30'	20'	44"	a/
	Barbed		13 ½	High Tensile	4	30'	20'	44"	a/
	Barbed		14	High Tensile	4	30'	20	44"	a/
	Barbed		15 ½	High Tensile	4	30'	20'	44"	a/
	Woven (net)/ Barbed			Malleable 2/		30'	20'	44"	b/
	Woven (net)/ Barbed		12 ½	High Tensile		N/A	25'	44"	b/
		Smooth	12 ½	High Tensile 3/	1 9/ 5/	150'	100'	32"	c/
		Smooth	12 ½	High Tensile 3/	2 9/ 5/	150'	100'	35"	d/
		Smooth	12 ½	High Tensile 3/	3 9/	150'	100'	39"	e/
		Smooth	12 ½	High Tensile 3/	4 9/	150'	100'	43"	f/
		Smooth	12 ½	High Tensile 3/	5 9/	150'	100'	43"	g/
	Barbed (suspension)		12 ½ 13 ½ 14 15 ½	Malleable or High Tensile	4	100' 4/		44"	a/
Sheep	Barbed		12 ½	Malleable	7 8/	30'	20'	36"	j/
	Barbed		12 ½ 13 ½ 14	High Tensile	7 8/	30'	20'	36"	j/
	Woven (net)			Malleable 2/	8/	30'	20'	39"	b/
	Woven (net)		12 ½	High Tensile	8/	N/A	25'	39"	b/
		Smooth	12 ½	High Tensile 3/	4 9/ 5/	150'	75'	36"	h/
		Smooth	12 ½	High Tensile 3/	5 9/	150'	75'	46"	i/
Goats	Barbed		12 ½	Malleable	7 8/	20'	15'	36"	j/
	Barbed		13 ½ 14	High Tensile	7 8/	20'	15'	36"	j/
	Barbed		15 ½	High Tensile	7 8/	20'	15'	36"	j/
	Woven (net)			Malleable 2/	8/	30'	20'	39"	b/
	Woven (net)		12 ½	High Tensile	8/	N/A	25'	39"	b/
		Smooth	12 ½	High Tensile 3/	4 9/ 5/	150'	75'	36"	h/
		Smooth	12 ½	High Tensile 3/	5 9/	150'	50'	36"	i/
Deer	Woven (net)			Malleable 6/		20'	20'	96"	k/
	Woven (net)			High Tensile		20'	20'	96"	k/

TABLE 1 FOOTNOTES

1/ Gauge – Foreign-made 12 ½ gauge and heavier malleable steel barbed wire (not high tensile) must equal or exceed 950 pounds (lbs.) force break strength.

2/ At least 32" of woven (net) wire having at least 11 gauge top and bottom strands, 14 ½ gauge intermediate and stay wires, with stay wires spacing 12" or less. If cattle are the only livestock being managed, include two strands of 12 ½ gauge barbed wire or equivalent in tensile strength on top or 35" net wire with 1 strand of 12 ½ gauge barbed wire on top. When managing only sheep or goats, 39" net wire with 10 gauge top and bottom strands, and 12 ½ gauge intermediate and stay wires with spacing of 12" or less can be used in lieu of the first alternative.

3/ 170,000 PSI minimum strength or greater for 3 or more wire fences, 130,000 PSI minimum strength or greater for 2 wire or less fences, and minimum Type III galvanization which has .80 ounces of zinc per square inch of wire surface.

4/ Twisted wire stays must be installed at not more than 15 foot intervals between line posts. All stays should swing free of the ground to permit the fence to sway when contacted by animals. Suspension fences shall not be constructed on a curve. Directional changes in the line shall be by definite angles and properly braced. Suspension fences should be constructed with approximately a 3 inch sag in the wire between posts to permit maximum sway of the fence.

5/ For use as cross-fence in a grazing system. Introducing animals to electric fencing in a designated training facility is recommended. Not recommended for exterior fences.

6/ Bottom section of at least 48" woven wire, 11 gauge or larger top and bottom strands, 14 ½ gauge or larger intermediate and stay wires, and stay wires spaced no more than 6 inches. Top section of at least 35" woven wire and made of 11 gauge or larger top and bottom strands, 14 ½ gauge or larger intermediate and stay wires spaced no more than 12 inches.

7/ Line posts must be set at significant high and low points along fence to maintain proper spacing and wire height.

8/ When cattle are grazed in addition to sheep and/or goats, use one barbed wire above the top wire or above 39 inch net, with approximately 10 inch spacing between top two wires.

9/ In some instances, an all-positive-charge fence will normally suffice. If experience shows that the soil on the site will dry to the point that it will not cause sufficient shock to the animal, then a combination of positive (+) and negative (-) wires should be used.

10/ 12 ½ gauge smooth wire with minimum Type III galvanization can be substituted for barbed wire when fencing is constructed for horses only.

11/ Wire must be new and have a minimum Class I galvanization.

12/ Line Post: If a combination of tee (T) post and wood/steel line post are used the ratio of tee posts to line post should be 5:1.

TABLE 1 WIRE SPACING FOOTNOTES

a/ Bottom wire set a minimum of 14” above ground with middle two wires set at 10” intervals, and top wire set at not less than 44” above ground.

b/ At a minimum 32” woven (net) wire set at ground level with one strand of 12 ½ gauge barbed wire or equivalent set 3” above the woven wire, and another strand of 12 ½ gauge barbed wire set 10” above the first barbed wire, or 35” woven (net) wire set at ground level with one 12 ½ gauge barbed wire or equivalent set 10” above the net wire. For sheep and goats alone, 39” net wire set at ground level will suffice.

c/ One “hot” wire set 24” - 40” above ground level, depending on the size of the animal to be controlled. This spacing also includes offset wire on existing fences.

d/ Top wire shall be set from 30” - 42” above ground, with second wire set below at 14” - 24” above ground level.

e/ Top wire shall be set from 34” - 48” above ground, with middle wire set at 24” - 36” above ground, and bottom wire set at 12” - 24” above ground.

f/ Interior or boundary fence. Top wire shall be set from 42” - 60” above ground, second wire from top set at 34” - 48” above ground, third wire from top set at 20” - 34” above ground, and bottom wire set at 10” - 20” above ground. Wire spacing needs to be constructed in a manner **not** to allow the animal’s head to penetrate the fence without being shocked.

g/ Boundary fence with top wire set 50” - 60” above ground level, 4th wire set 40” - 50” above ground level, 3rd wire set 30” - 40” above ground level, 2nd wire set 20” - 30” above ground level, and bottom wire set 10” – 20” above ground level. Wire spacing needs to be constructed in a manner not to allow the animal’s head to penetrate the fence without being shocked.

h/ Top wire (hot) shall be set at 36” above ground level with the lower wires (grounded or hot) spaced at 24”, and 14” above ground, with bottom wire (hot) no higher than 6” above ground level.

i/ Top wire (hot) shall be set at 36” above ground level with lower wires (hot or alternating ground/hot) spaced at 26”, 18”, and 12” above ground level, with the bottom wire (hot) no higher than 6” above ground level.

j/ Top wire shall be set at 34” - 36” above the ground level, with the remaining 6 wires set no more than 5” apart and the bottom wire set no higher than 5” above ground level.

k/ Wildlife fencing. See ***Figures 19*** and ***20.***

APPENDICES
Section A

GENERAL MATERIAL AND INSTALLATION CRITERIA
APPLICABLE TO PERMANENT ELECTRIC FENCES ONLY

I. ENERGIZERS & COMPONENTS

A. Energizers

For permanent electric fences, energizers should contain high voltage/low impedance short pulse which can produce at least 4000 volts output, with all livestock containment fences charged (on) when under maximum anticipated load. Electric energizers (power fence controllers) will be installed according to manufacturer's recommendations and will meet the following minimum criteria:

1. Recommend one DIGITAL read out volt meter to be accompanied with energizer.

2. The energizer may be solar, 110 or 220 volt, or 12 volt battery units. For 110 volt or 220 volt energizers, install a voltage spike/surge protector to protect energizer from power surges from the energizer plug.

3. High power, low impedance with a 5,000 volt peak output and a pulse that is less than 300 milliamps (mAmps) in intensity, finished within 0.0003 of a second, and at a rate of 35-65 pulses per minute.

4. Solid state circuitry and high impact weather resistant case.

5. Safety pace fuse to prevent over-pulsing

6. Joule rating high enough to provide a minimum shock at the farthest point as follows:

   - Cattle – 1600 volts
   - Sheep and hair goats – 2000 volts
   - Horses, hogs and meat goats – 1200 volts

7. Chargers will be grounded and protected from lightning according to energizer manufacturer's recommendations.

8. See ***Figures 11*** and ***12*** for the typical installation of an electric fence energizer and grounding system.

B. Grounding Rods

A minimum of three (1/2 inch diameter) 6 ft. long galvanized steel rods will be installed near the energizer and spaced at 10 ft. intervals (See ***Figures 11, 12*** and ***14***).

1. Avoid mixing dissimilar materials to prevent electrolysis (do not use copper components).

2. For large energizer systems (14 or more joules), use a minimum of 3 additional feet of ground rods per joule of energizer output capacity.

C. Lightning arrestors or lightning choke

1. Lightning arrestors or chokes will be required as shown in **Figures 11** and **12**.

2. Install an additional set of four 6 ft. ground rods for lightning arrestor. Locate rods 65 ft. away from ground rods set for the energizer. These rods will also be spaced 10 ft. apart.

3. Energizer manufacturers' requirements for lightning protection must be met or exceeded.

D. In-Line Strainers

1. Used to maintain tension in permanent, high tensile steel, smooth wire fences.
2. Will be placed near center of fence line to achieve equal tension at both ends of the line.
3. Should be installed on each wire between each pull assembly and a distance not to exceed:
   - 4000 feet for straight line stretches
   - 1200 feet for uneven terrain or non-straight stretches.
4. See ***Figure 13*** for In-Line Strainers being used to maintain tension in high tensile steel smooth wire fences.

E. Electric Insulators

1. Porcelain, ceramic, high quality UV Stabilized polyethylene or equivalent insulators will be used on wood and steel posts.
2. Offset Brackets can be attached to standard fences at intervals of 50-60 feet and a height equal to 2/3 the height of the animal controlled.
3. Any electric insulators used shall be capable of withstanding a minimum of 10,000 volts.

F. Other Accessories

1. Warning signs
   Electric fence warning signs are recommended every 300 ft. on exterior fences. Warning signs are also recommended to be posted around barns, troughs, and other facilities as specified by any local, state, and/or federal laws or regulations.
2. Gate handles, switches, and other hardware used to conduct electrical current must be galvanized or contain aluminum components. See ***Figure 14*** for illustration for electric fencing and a single strand gate and placement of galvanized ground rods.
3. For areas that cross creeks and streams, an electric fence flood gate is necessary to allow debris to pass through but keeping the livestock in. See ***Figure 16*** to see an electric fence flood gate and their components.

G. Hot Wire Placement

When two or more wires are used, the top wire should always be hot. With two wires, the bottom can be hot or grounded. Three or more wires will alternate hot and ground with top and bottom wires being hot.

II. WIRE REQUIREMENTS

A. Galvanized 12 ½ gauge high tensile steel wire with Class III galvanized coating. Minimum strength for 3 or more wires should be 170,000 PSI or greater and 130,000 PSI minimum strength for 1 or 2 wires.

B. Wires attached to line post must be allowed to slip and be locked to stay post if applicable.

C. For splicing high tensile strength wire, use only the equivalent of crimping sleeves, figure eight knots or thread through knot. All electrical connections (both ground and positive) must use the equivalent of crimping sleeves or galvanized joint clamps. See ***Figure 15*** in the proper methods of tying High Tensile Wires.

1. High Tensile Wire - Compression fittings or Splice sleeves will have a tensile strength not less than 80% of the wire. Ends of wire will be overlapped at least 2 inches with two sleeves fitted over wires and firmly crimped.

2. High Tensile Wire – "The Figure 8", as shown below, can be used by overlapping wires 2 inches, looping each wire over and back through, then pulling together. As fence is stretched, the splice will tighten.

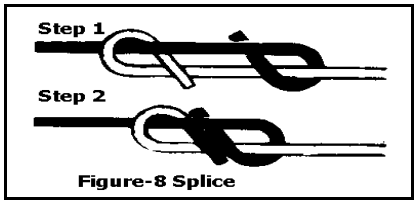

D. Underground wire - All underground wire(s) must be insulated, molded, high tensile strength steel 12½ gauge or larger wire. The insulation must be high density polyethylene or polypropylene with ultraviolet (UV) stabilizer and capable of withstanding a minimum of 10,000 volts. See ***Figure 14*** to see the underground wire being used where a gate is located.

III. POSTS

A. Line Post Note: PVC, composite, fiberglass and similar posts may melt when exposed to fires.

Maximum line post spacing with 2 or more stays will be 150 ft. apart. The maximum line post spacing without stays will be 100 ft.

1. Fiberglass sucker rods of no less than 3/8 inch diameter can be used on 1 and 2 wire fences. Fiberglass sucker rods must be at least 5/8 inch in diameter on fences more than 2 wires.

2. Fiberglass T-post must be new and at least one (1) inch in cross-section for fences with more than 2 wires. Steel T-post and other conductive material post can be used ONLY if polyethylene or polypropylene with ultraviolet (UV) stabilizer insulators are used.

3. Fiberglass posts will be a composite of marble fiberglass and polymer resin, treated by thermosetting.

4. PVC post can be used as stays if material is UV treated. PVC stays must be at least ½ inch in diameter.

5. Composite, non-conductive, UV protected posts made of 30% wood fiber and 70% polypropylene at least 1 1/8" diameter.

6. Pull post or pull post assemblies for electric permanent fence shall be spaced no more than 1/2 mile apart on undulating terrain. On flat terrain, spacing may be increased to end of spool (normally 4000 ft.).

B. Corner and End/Gate Post (See ***Figures 1-8***, 17 & 18 for specifications)

1. Minimum post length will be determined by the number of wires used. The length of the post should be 36" (below ground) plus 6" above the height of the top wire (For example: a 2-wire fence with the top wire set at 30"; the minimum post length will be 72" or 6 ft.).

2. Braces for electric fences with two wires or less can use a Bed Log Brace as shown below. A Bed Log Brace shall consist of a wood (pressure treated or durable wood) post with a minimum top diameter of 4" set 3 ft. below ground or a steel post with a minimum 2-3/8 inch outside diameter, permanently capped, set 3 ft. below ground. The bed log shall be 4 ft. long and set at a minimum of 3 inches below ground. Bed logs can be made from landscape timbers or equivalent sized posts.

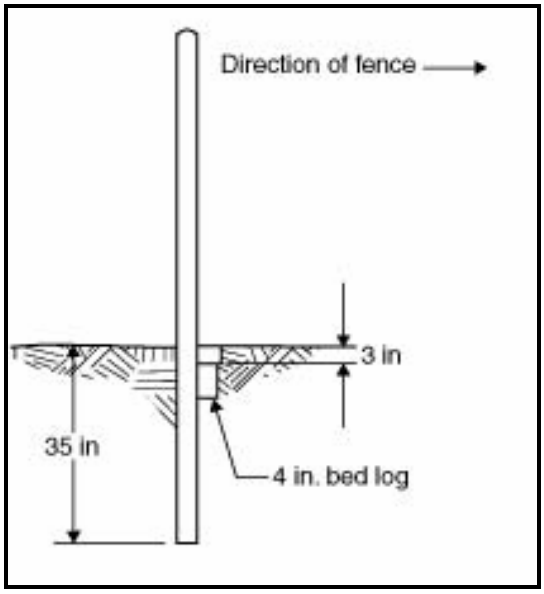

Side view

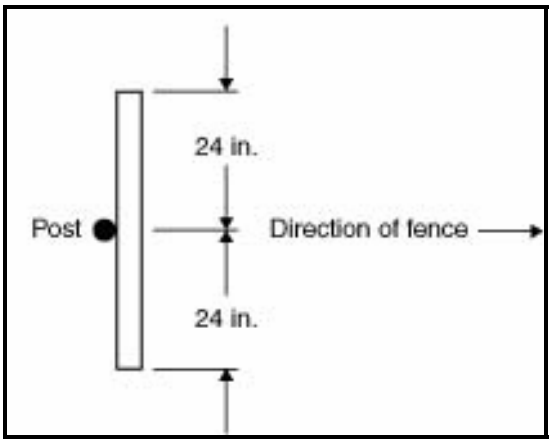

Overhead View

3. Wood Post - (Pressure treated or durable wood) Single pole post are for low tension applications only. A single wood post can be used on fences with 2 wires or less. Post will have a minimum top diameter of 6 inches and be set firmly in concrete, 3 ft. in the ground.

4. Steel Pipe Post – Single Post Brace Assemblies: These will be used for low tension applications only. A single steel pipe can be used on fences with 2 wires or less. Minimum of 2-3/8 inch steel pipe or equivalent, permanently capped, set 3 ft. in ground in concrete. These types of steel post bracing system are adequate for permanent electric fences that are 2 wires or less with a 1600 feet or less pull distance between braces.

5. Steel "T" Post - There are several commercially manufactured systems that incorporate "T" post into bracing assemblies. These should meet or exceed the strength, durability and effectiveness of those provided here (1.33 lbs. /ft) and be installed according to manufacturer guidelines. Commercial or shop-made steel T post brace assemblies comparable to ***Figure 17*** are acceptable where length of pull is 1600 feet or less and number of wires is 3 or less. See ***Figures 17*** and ***18*** for various illustrations of a Steel T Post bracing system for electric fences.

5. For 3 or more wire fences or when heavy duty gates will be installed, a minimum of 2 posts in line will be installed to provide a suitable anchor for the fence. Post will have a minimum top diameter of 6 inches, 8 ft. in length, and be set firmly 3 ft. in the ground. Cross post will be minimum 4 inches (See ***Figure 4***).

6. Allow newly installed braces and assemblies to settle and/or pack dirt sufficiently around all posts, do not over-tighten wires.

7. Steel pipes must be permanently capped to exclude rainwater and all metal components used must be painted with a durable permanent rust resistant coating or be galvanized; components will be repainted if rusting occurs.

APPENDICES
Section B

FIGURES & ILLUSTRATIONS FOR
NON-ELECTRIC AND ELECTRIC FENCES

FIGURE 1: WELDED STEEL 3-POST DIAGONAL END BRACE ASSEMBLY

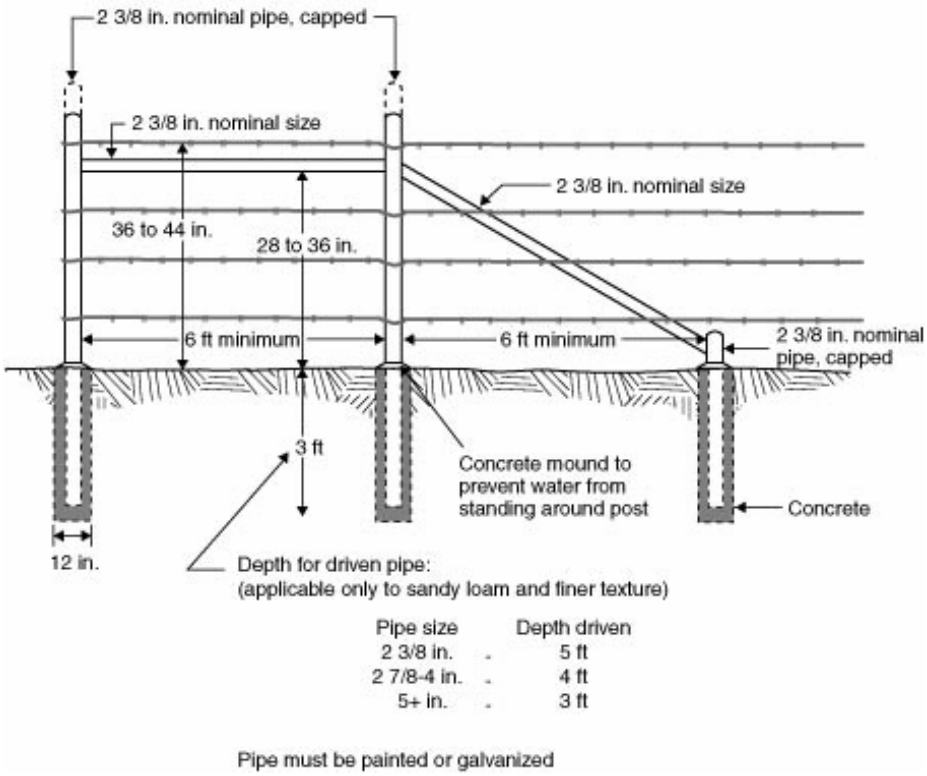

FIGURE 2: SINGLE POST CORNER OR ANGLE BRACE ASSEMBLY

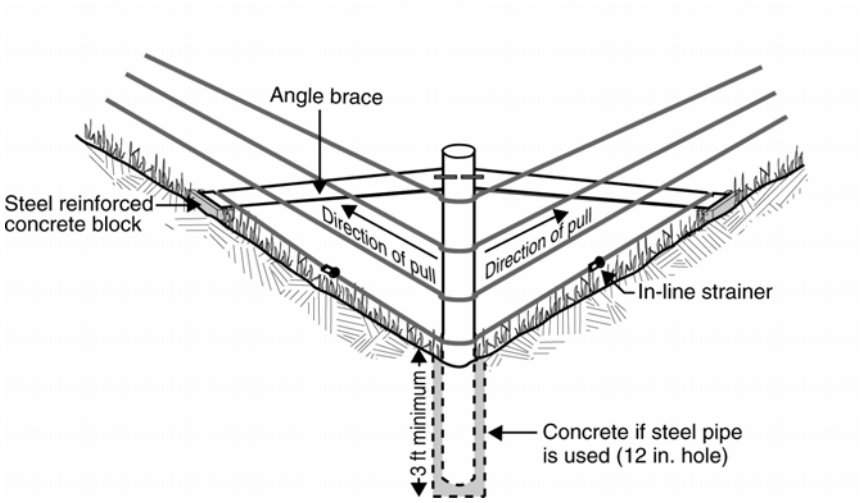

FIGURE 3: STEEL WELDED SINGLE POST END/CORNER BRACE

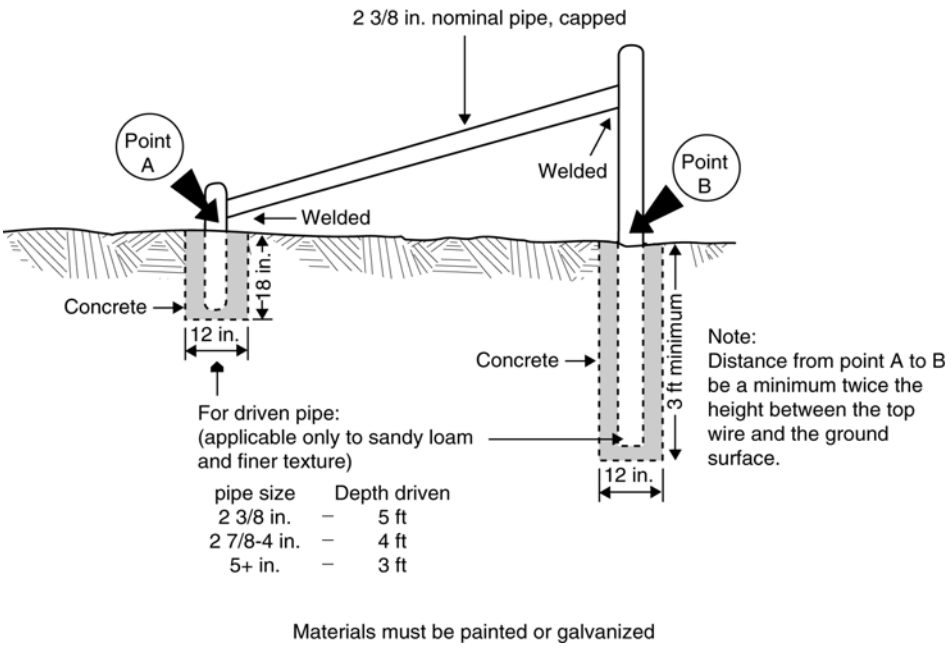

FIGURE 4: TWO (2) POST END BRACE WITH DEADMAN

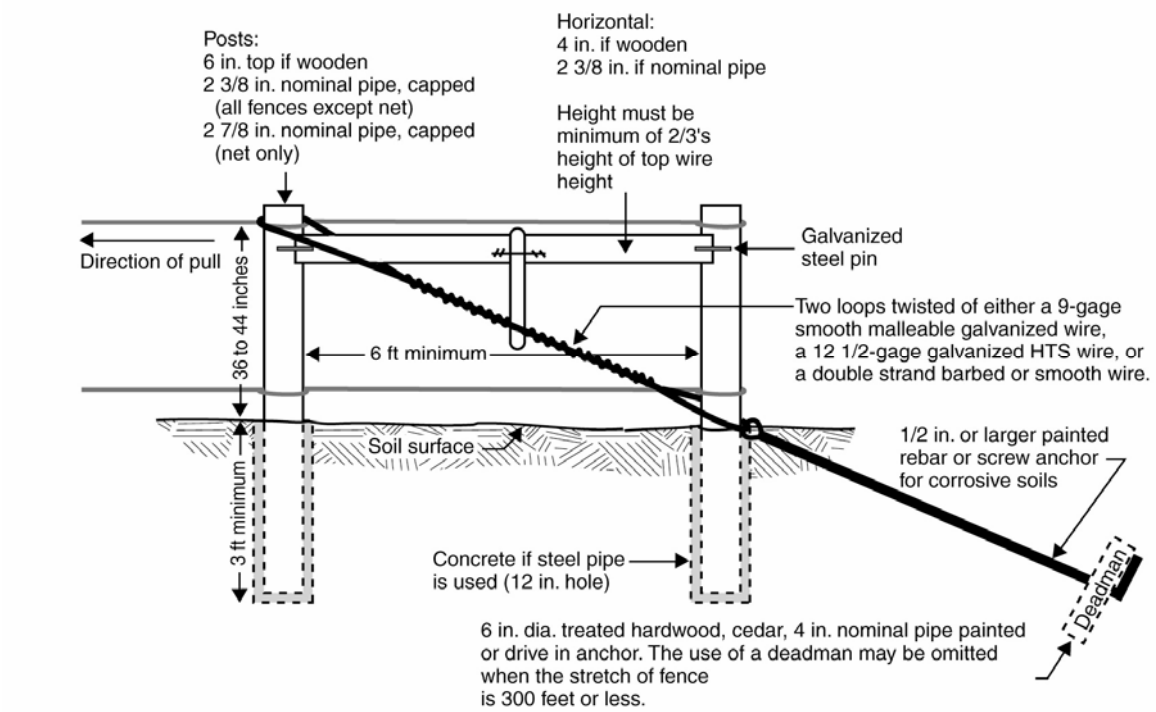

FIGURE 5: THREE (3) POST CORNER BRACE WITH OPTIONAL DEADMAN

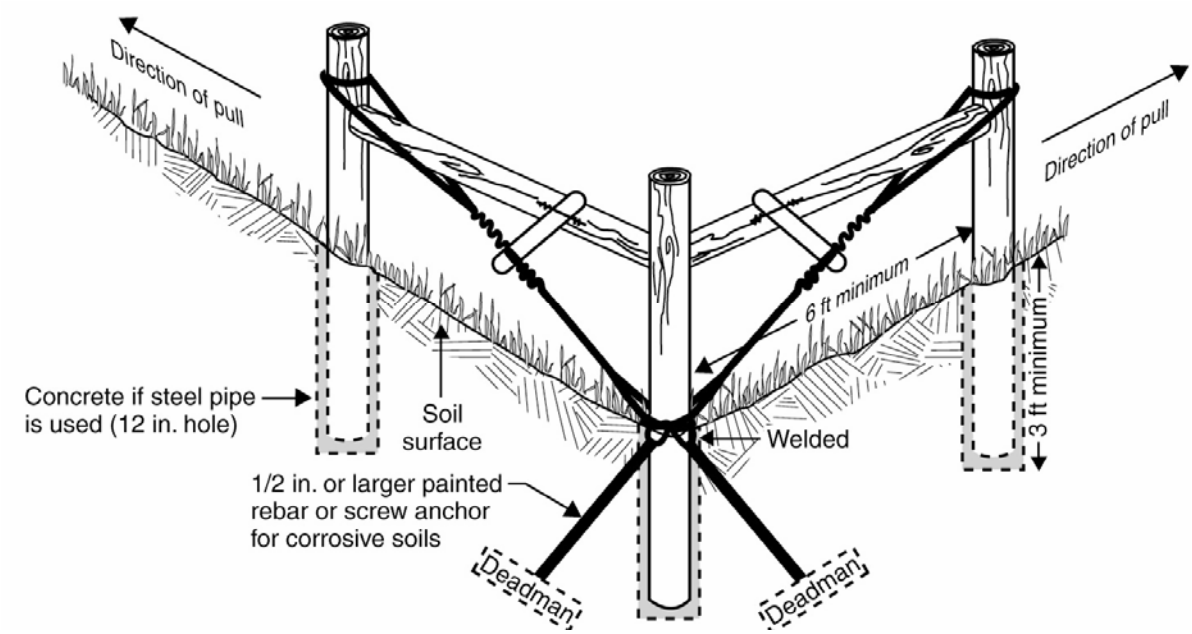

FIGURE 6: FIVE POST CORNER BRACE WITH NO DEADMAN SHOWN

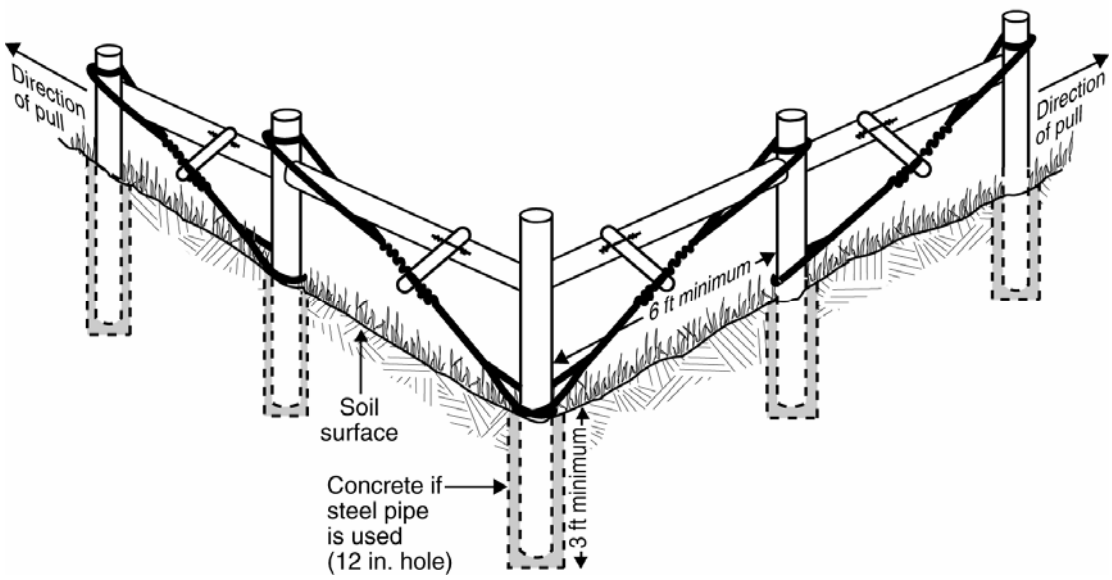

FIGURE 7: THREE POST DOUBLE “H” BRACE END ASSEMBLY WITHOUT DEADMAN

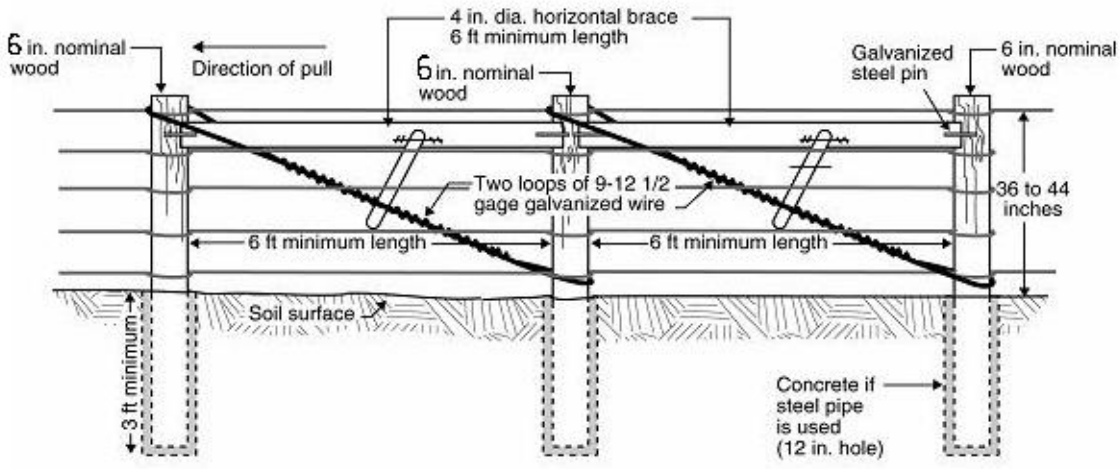

Note: Materials shown above may be substituted using 2 3/8 in. steel pipe, capped, set in concrete (12 in. diameter hole). Pipe must be painted or galvanized

When using steel pipe, an option for the second brace may be a diagonal brace installed according to the diagram for the Steel Single Post Welded brace.

FIGURE 8: SINGLE POST END SLIP BRACE ASSEMBLY

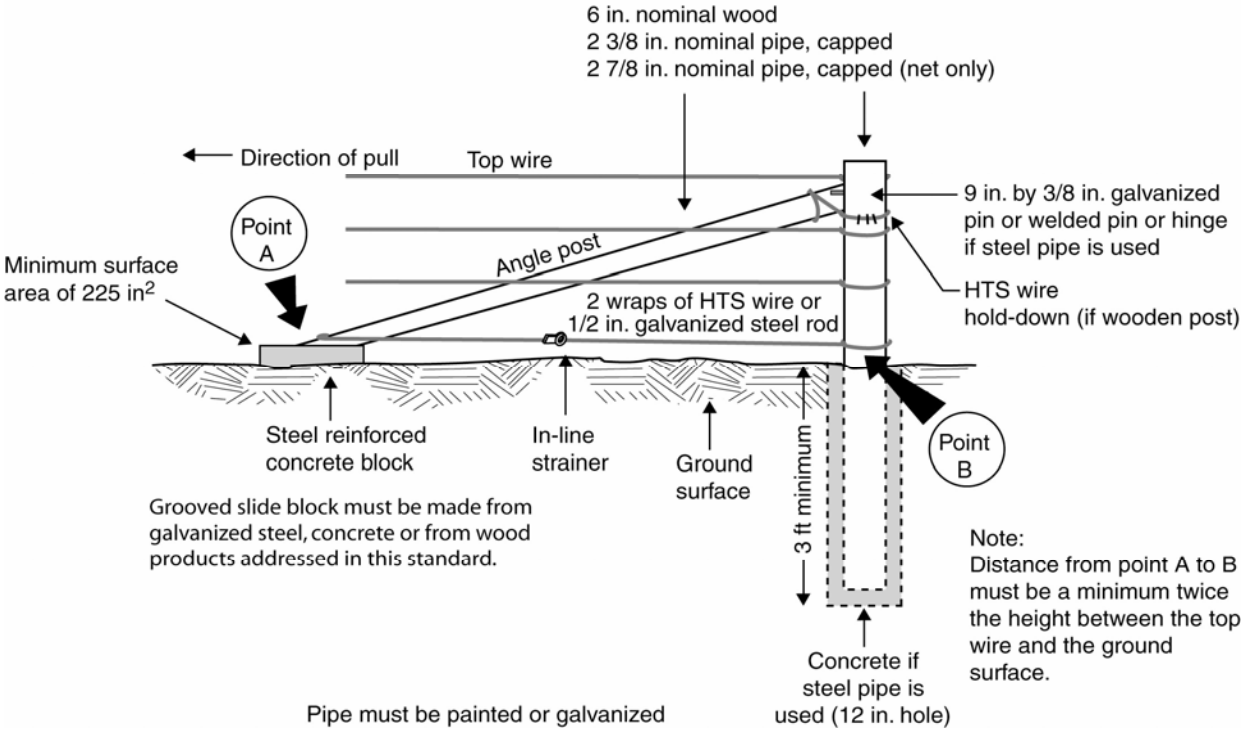

FIGURE 9: "H" BRACE AND SINGLE POST PULL ASSEMBLIES

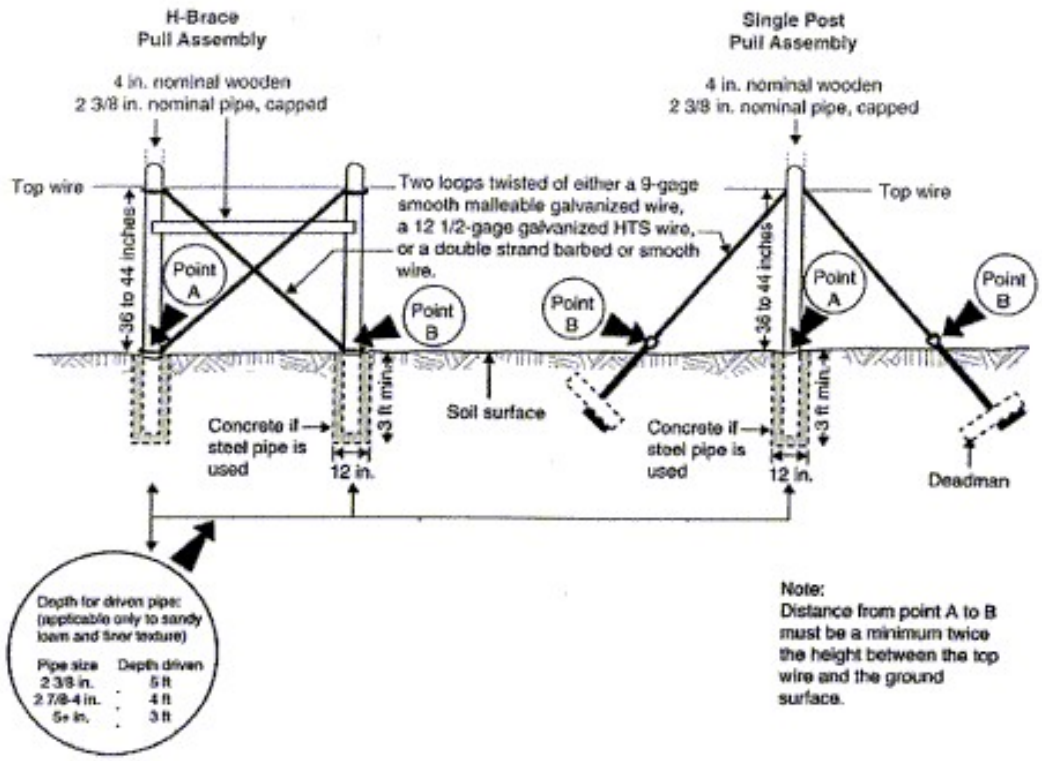

FIGURE 10: THREE POST WELDED PULL ASSEMBLY

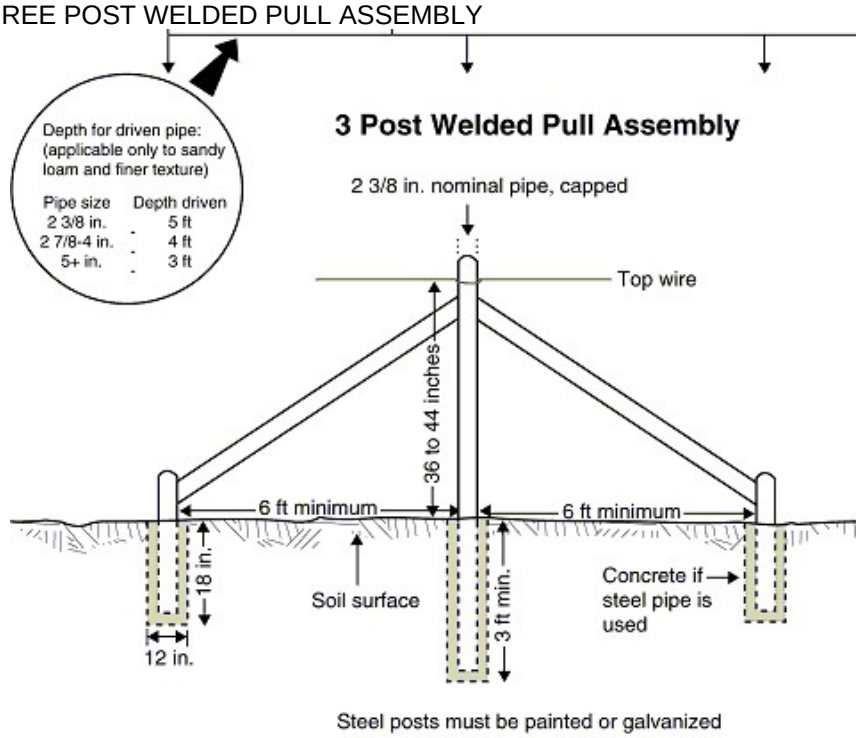

FIGURES 11, 12, 13, 14, 15: ELECTRIC FENCE COMPONENTS

FIGURE 11

Typical Installation of a Low-Impedence Electric Fence Energizer and Grounding System

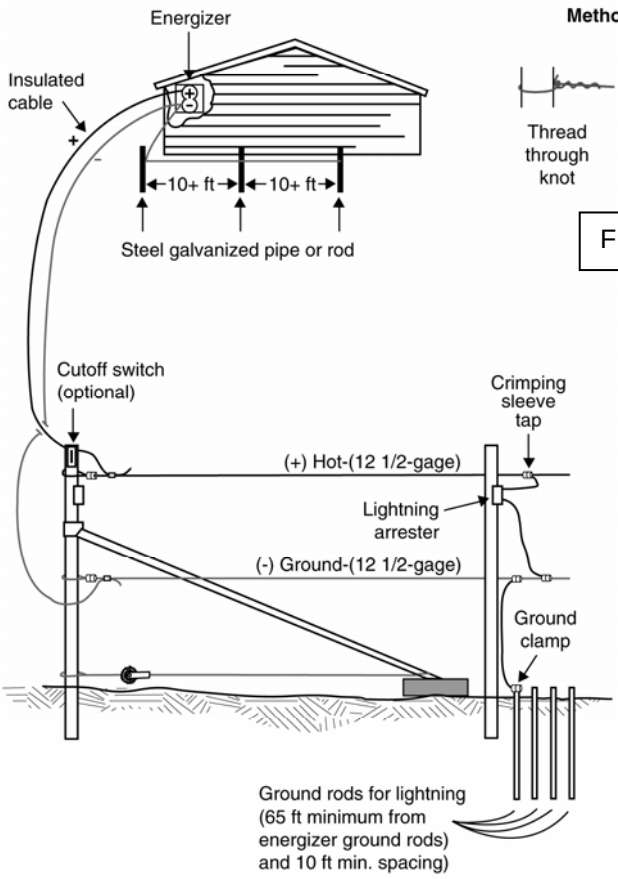

FIGURE 15

Methods of tying HTS wire

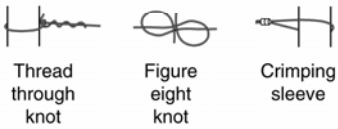

FIGURE 14

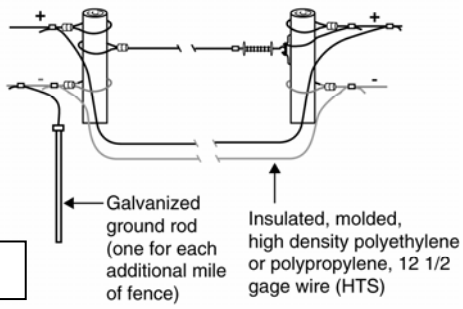

FIGURE 13

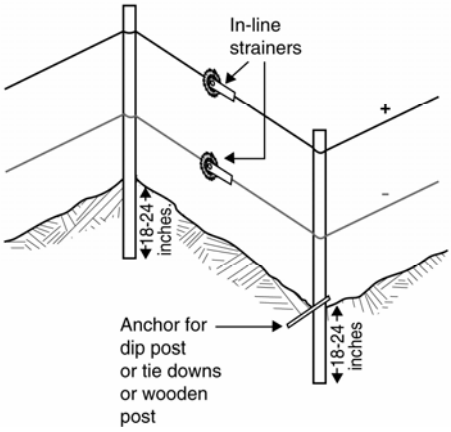

FIGURE 12

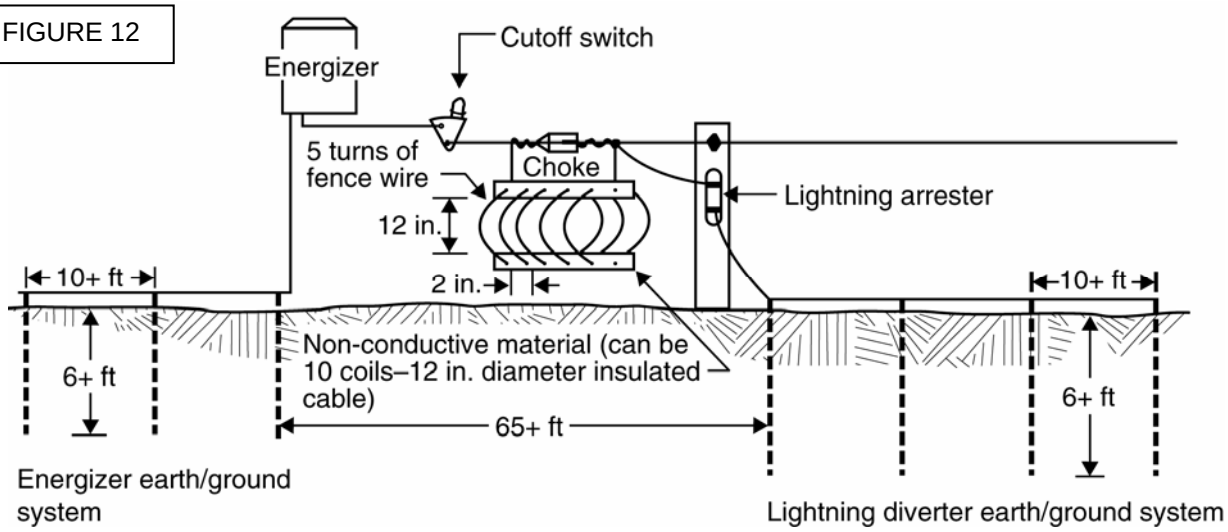

FIGURE 16: ELECTRIC FENCE FLOOD GATE

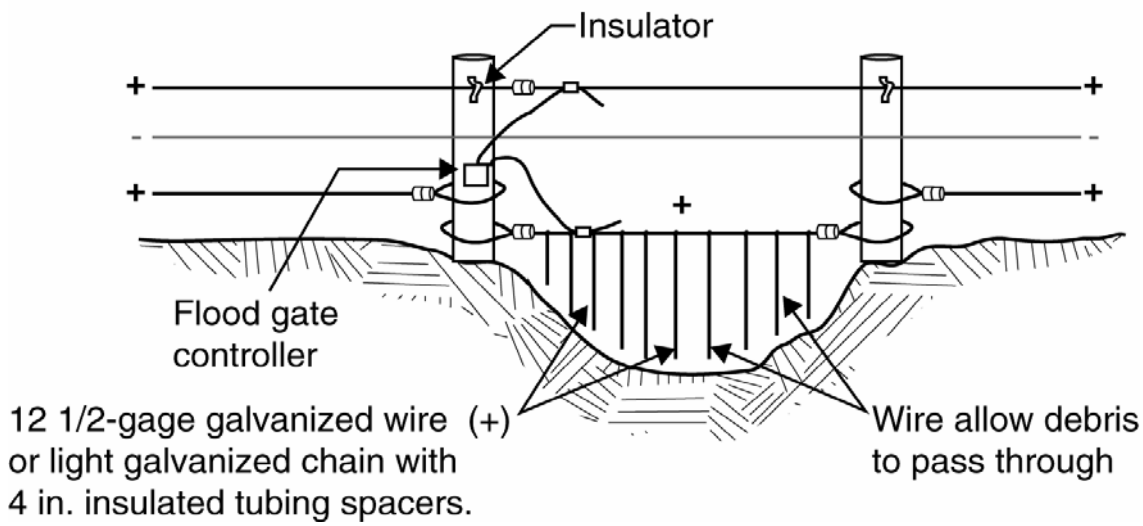

FIGURE 17: STEEL T – POST DIAGONAL CORNER POST FOR ELECTRIC FENCE

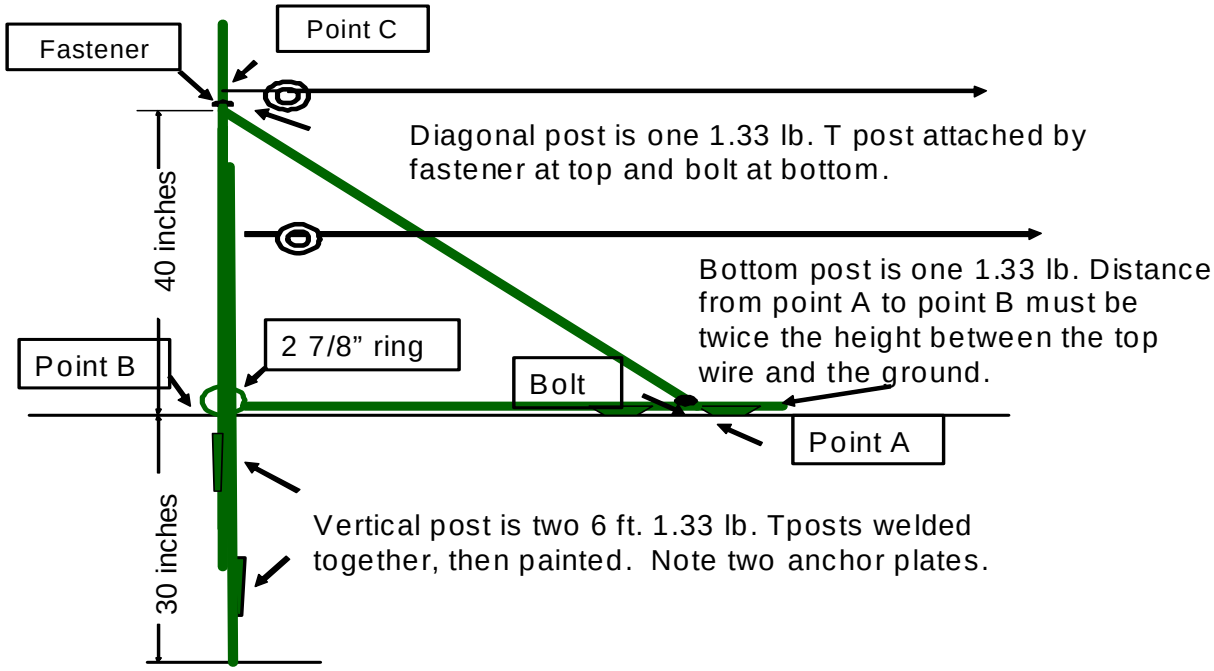

FIGURE 18: CLIP AND FASTENER ASSEMBLY ELECTRIC FENCE – SIDE AND REAR VIEWS

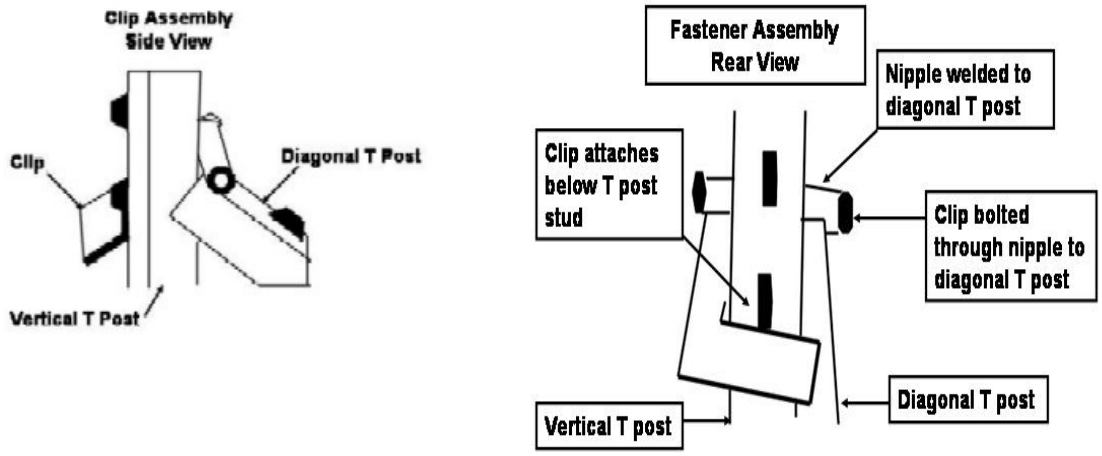

FIGURE 19: END BRACE ASSEMBLY FOR DEER MANAGEMENT FENCES

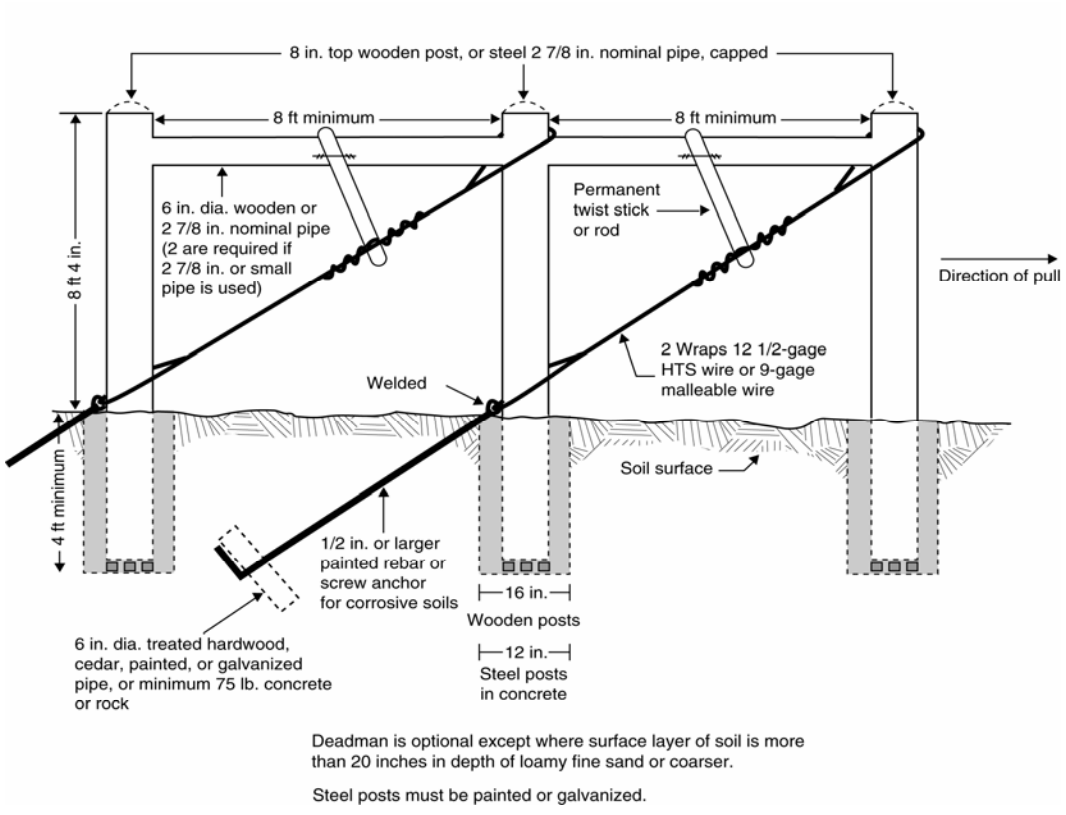

FIGURE 20: FENCE CONSTRUCTION SPECFICATIONS FOR DEER MANAGEMENT FENCES

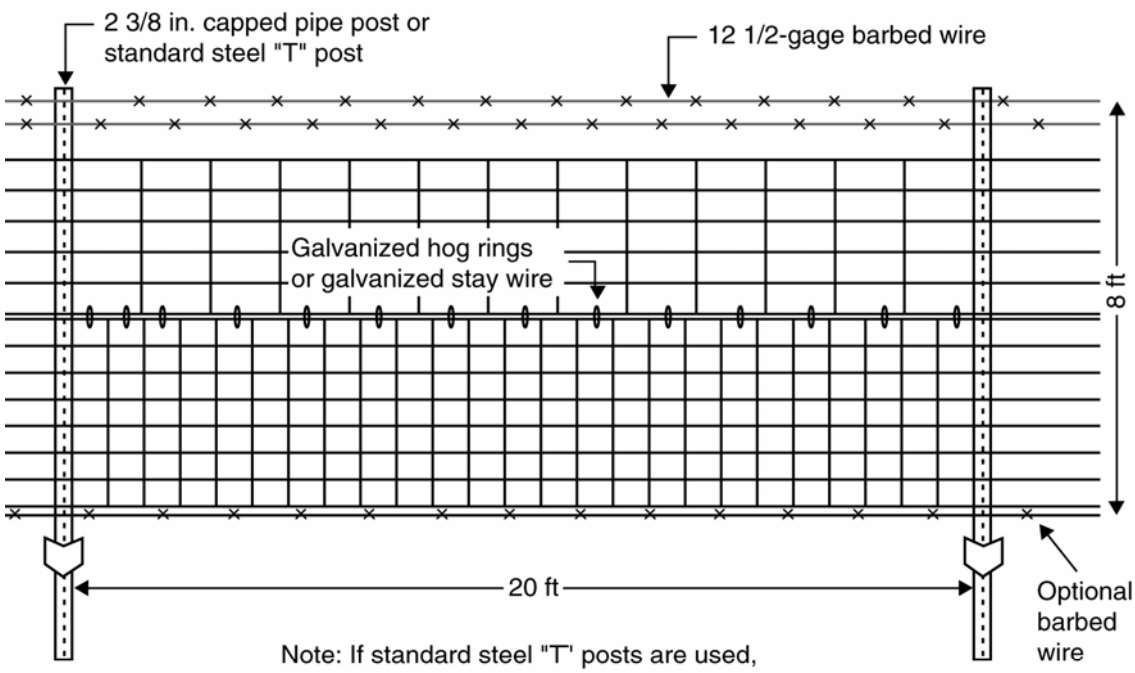

Note: If standard steel "T" posts are used,
Install 2 3/8 in. pipe post (capped) or
6 in. top wooden post every 150 ft
(Wooden stays may be placed
between line post as needed.

Steel posts must be painted or galvanized.

ATTACHMENT 1

U.S. Department Of Agriculture **Natural Resources Conservation Service** *TX-10/01*

Fence Construction Check Sheet (Non-Electric)

Landowner:_____ **Planned** **Installed**

Field No:_____ Tract No:_____ By: _____ _____

Fence No:_____ Length:_____ Date: _____ _____

	Unit	Minimum	Planned	Installed
I. Wire				
A. Barbed wire (galvanized)	Total Footage		_____	_____
1. Size	Gauge	_____	_____	_____
2. Strands	Number	_____	_____	_____
1. Height of top wire	Inches	_____	_____	_____
2. Splice used?				
B. Net Wire (galvanized)	Total Footage		_____	_____
1. Size (Top and bottom strand)	Gauge	_____	_____	_____
(Intermediate and stay stands)	Gauge	_____	_____	_____
2. Spacing of stay wire	Inches	_____	_____	_____
3. Height of net wire	Inches	_____	_____	_____
4. Height of fence (top wire)	Inches	_____	_____	_____
5. Strands above/below net wire	Number	_____	_____	_____
II. Corner, End/Gate, and H-Brace Posts			_____	_____
(See attached diagram)				
A. Corner and End/Gate Post				
1. Kind (1)	Material	_____	_____	_____
2. Length	Feet	_____	_____	_____
3. Nominal Top Diameter	Inches	_____	_____	_____
4. Depth to Set	Inches	_____	_____	_____
5. Amount	Number	_____	_____	_____
B. Cross-member				
1. Kind (1)	Material	_____	_____	_____
2. Length	Feet	_____	_____	_____
3. Nominal Top Diameter	Inches	_____	_____	_____
4. Amount	Number	_____	_____	_____
5. Distance below top wire.	Inches			
C. H-Brace Post				
1. Kind (1)	Material	_____	_____	_____
2. Length	Feet	_____	_____	_____
3. Nominal Top Diameter	Inches	_____	_____	_____
4. Depth to Set	Inches	_____	_____	_____
5. Amount	Number	_____	_____	_____
III. Line Posts (2)				
A. Wood or Pipe Posts				
1. Kind (1)	Material	_____	_____	_____
2. Length	Feet	_____	_____	_____
3. Nominal Diameter	Inches	_____	_____	_____
4. Spacing	Feet	_____	_____	_____
5. Amount	Number	_____	_____	_____
B. Steel Posts				
1. Kind	Coating	_____	_____	_____
2. Length	Feet	_____	_____	_____
3. Weight per Foot	Pounds	_____	_____	_____
4. Spacing	Feet	_____	_____	_____
5. Amount	Number	_____	_____	_____

(1) Certificate required for treated posts and metal pipe must be permanently capped and painted or galvanized.

All gates used must meet or exceed standard for type of fence constructed.

The Vicinity Map/Diagram must be attached to this Check Sheet for meeting Fence Standard 382.

This practice meets or exceeds USDA/NRCS specifications:

Signature: _____ Date _____

TX-10/01

U.S. Department Of Agriculture

ATTACHMENT 2

Natural Resources Conservation Service

Fence Construction Check Sheet (Electric)

Landowner:_____

Field No:_____ Tract No:_____ By: _____

Fence No. _____ Length:_____ Date: _____

	Unit	Minimum	Planned	*Installed*
I. Wire	Total Footage		_____	_____
A. Size (12 1/2 gauge)	Gauge	_____	_____	_____
B. Strands	Number	_____	_____	_____
C. Average height of wires	Inches	_____	_____	_____
II. Brace Assemblies (See attached diagram)	Number	_____	_____	_____
A. Post				
1. Kind (1)	Material	_____	_____	_____
2. Length	Feet	_____	_____	_____
3. Nominal Top Diameter	Inches	_____	_____	_____
4. Depth to Set	Inches	_____	_____	_____
5. Concrete (80 lbs. bag)	Number	_____	_____	_____
6. Amount	Number	_____	_____	_____
B. Cross-member (when required)				
1. Kind (1)	Material	_____	_____	_____
2. Length	Feet	_____	_____	_____
3. Nominal Top Diameter	Inches	_____	_____	_____
4. Amount	Number	_____	_____	_____
5. Distance below top wire	Inches			
III. Line Posts				
A. Wood, Fiberglass, or Composite Posts				
1. Kind (1)	Material	_____	_____	_____
2. Length	Feet	_____	_____	_____
3. Nominal Top Diameter	Inches	_____	_____	_____
4. Spacing	Feet	_____	_____	_____
5. Amount	Number	_____	_____	_____
B. Steel Posts				
1. Kind	Coating	_____	_____	_____
2. Length	Feet	_____	_____	_____
3. Weight per Foot	Pounds	_____	_____	_____
4. Spacing	Feet	_____	_____	_____
5. Amount	Number	_____	_____	_____
IV. Accessories (All conducting materials will be galvanized)				
1. Strainers or wire tightners	Number	_____	_____	_____
2. Pull post insulators	Number	_____	_____	_____
3. Line post insulators	Number	_____	_____	_____
4. Ground Rods	Number	_____	_____	_____
5. Lightning arrestors	Number	_____	_____	_____
6. Insulated cable	Feet	_____	_____	_____
7. Offset brackets	Number	_____	_____	_____
8. Warning Signs	Number	_____	_____	_____
9. Cut off switches	Number	_____	_____	_____
10. Digital Volt Meter	Number	_____	_____	_____
11. _____	_____	_____	_____	_____
12. _____	_____	_____	_____	_____
V. Power Unit	Type	_____	_____	_____

A. The energizer selected must be high voltage/low impedance, short pulse which can produce at least 4000 volts Output with all livestock containment fences charged (on) when under maximum anticipated load.

(1) Certificate required for treated posts and metal pipe must be permanently capped and painted or galvanized.

The Vicinity Map/Diagram must be attached to this Check Sheet for meeting Fence Standard 382.

This practice meets or exceeds USDA/NRCS specifications:

Signature: _____ Date: _____

APPROVAL AND CERTIFICATION

FENCE
(Ft)

CODE 382

PRACTICE SPECIFICATIONS APPROVED:

/s/ Mark Moseley	**8/30/2006**
Acting State Range Management Specialist	**Date**
/s/ Susan Baggett	**8/30/2006**
State Resource Conservationist	**Date**

These practice specifications are needed in the _____ Field Office Technical Guide.

_____	_____
District Conservationist	**Date**

CERTIFICATION:

Reviewed and determined adequate without need of revision.

_____	_____
Zone Range Management Specialist	**Date**
_____	_____
Zone Range Management Specialist	**Date**
_____	_____
Zone Range Management Specialist	**Date**
_____	_____
Zone Range Management Specialist	**Date**
_____	_____
Zone Range Management Specialist	**Date**