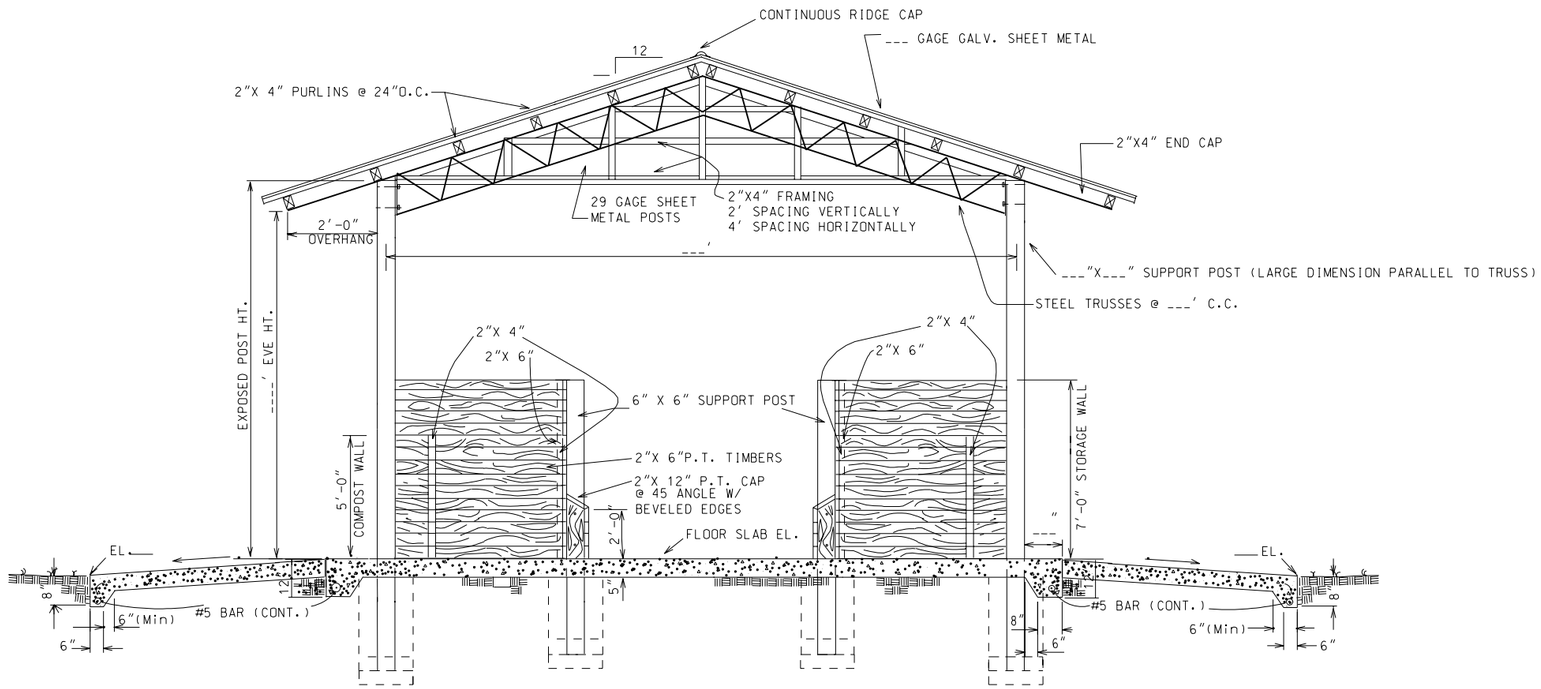

SECTION A-A

(N.T.S.)

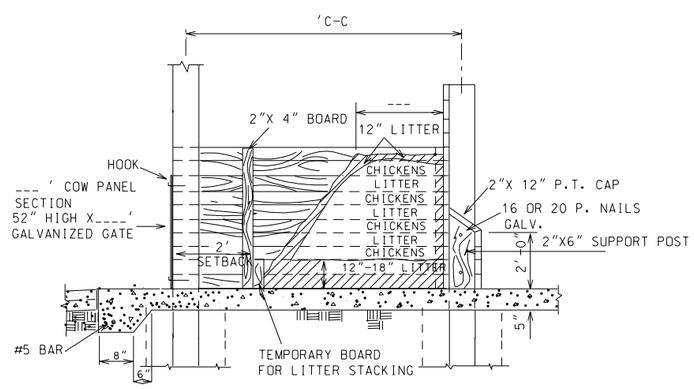

PRIMARY/ SECONDARY BIN - CROSS SECTION

NOTE: FOR ADDITIONAL STRUCTURAL DETAILS SEE FL-313

WASTE STORAGE FACILITY DEEP BIN SIDE BY SIDE COMPOST FACILITY	
STANDARD DWG. NO.	FL-313A2
DATE 12/02	SHEET OF

REVISIONS		
DATE	APPROVED	TITLE

Date

Designed

Drawn

Checked

Approved

NRCS
NATURAL RESOURCES CONSERVATION SERVICE
UNITED STATES DEPARTMENT OF AGRICULTURE

File No.

Drawing No.

Sheet of