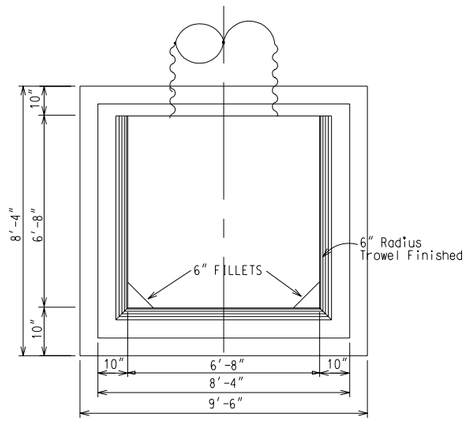

PLAN

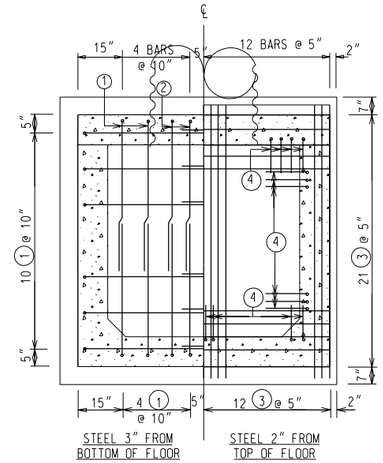

PLAN FLOOR SLAB

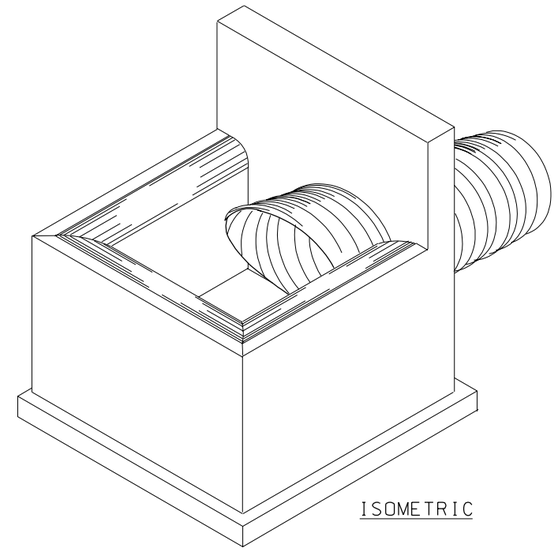

ISOMETRIC

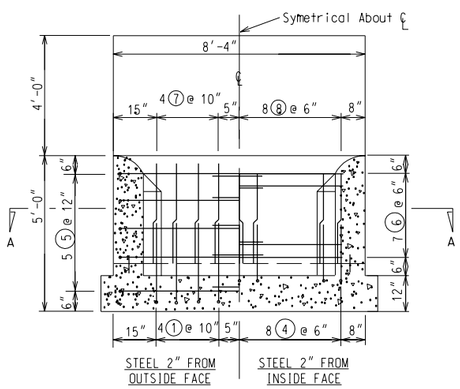

UPSTREAM WALL ELEVATION

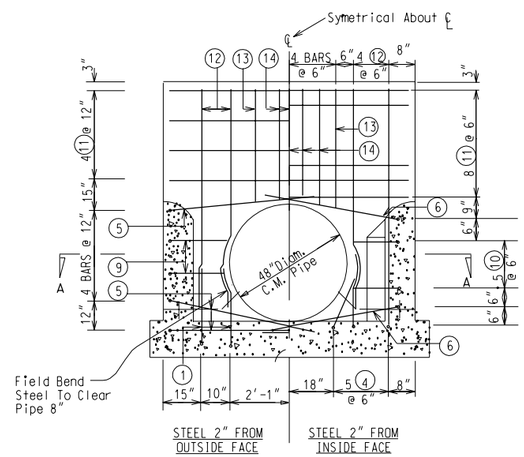

DOWNSTREAM WALL ELEVATION

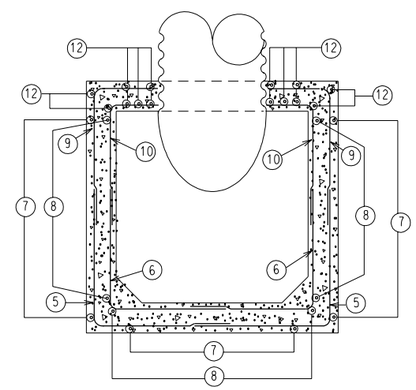

SECTION A-A

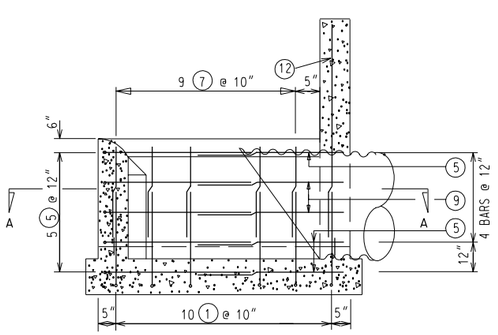

STEEL 2" FROM OUTSIDE FACE

SIDE WALL ELEVATION

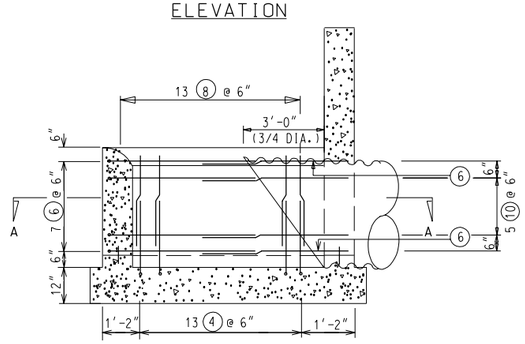

STEEL 2" FROM INSIDE FACE

SIDE WALL ELEVATION

NOTE:
1/4"x 6" Carbon Steel Plate Shall Be Continuous Around Inlet Except At C.M. Pipe As Shown.

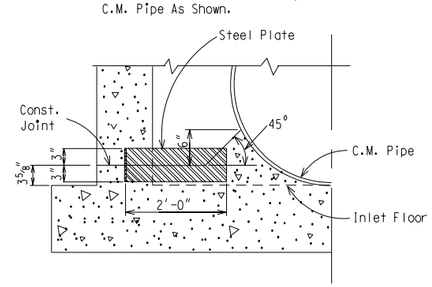

PLATE CONSTRUCTION JOINT DETAIL

STEEL SCHEDULE

FOR TYPICAL BAR TYPES REFER TO A.C.I. STANDARD 315 - 65

LOCATION	MARK	SIZE	QUAN	LENGTH	TYPE	C	D	TOTAL FT.
FLOOR SLAB	1	3	32	7'-3"	17	4'-9"	2'-6"	232'-0"
FLOOR SLAB	2	3	4	4'-9"	ST.			19'-0"
FLOOR SLAB	3	3	44	9'-0"	ST.			396'-0"
FLOOR SLAB-UPSTRM. DWNSTRM. SIDEWALL	4	3	51	3'-3"	17	2'-0"	1'-3"	165'-9"
SIDEWALLS & UPSTREAM WALLS	5	3	16	9'-6"	17	4'-9"	4'-9"	152'-0"
SIDEWALLS & UPSTREAM WALLS	6	3	18	9'-0"	17	4'-6"	4'-6"	162'-0"
SIDEWALLS & UPSTREAM WALLS	7	3	26	3'-6"	ST.			91'-0"
SIDEWALLS & UPSTREAM WALLS	8	3	41	3'-3"	ST.			133'-3"
DWNSTRM & SIDEWALLS	9	3	4	6'-6"	17	4'-9"	1'-9"	26'-0"
DWNSTRM & SIDEWALLS	10	3	10	6'-0"	17	4'-6"	1'-6"	60'-0"
DOWNSTREAM WALLS	11	3	12	8'-0"	ST.			96'-0"
DOWNSTREAM WALLS	12	3	14	7'-6"	ST.			105'-0"
DOWNSTREAM WALLS	13	3	4	4'-0"	ST.			16'-0"
DOWNSTREAM WALLS	14	3	8	3'-9"	ST.			30'-0"

QUANTITIES

#3 BARS 1,684.00 LIN. FT. 663.18 LBS.
CLASS 3,000 CONCRETE 7.8 CU.YDS.
1/4" X 6" CARBON STEEL PLATE 26'-6" LONG FOR ONE CONSTRUCTION JOINT.

NOTES AND SPECIFICATIONS

REVISIONS		
DATE	APPROVED	TITLE

CONCRETE BOX HOODED INLET FOR 48" DIAMETER PIPE

STANDARD DWG. NO. FL-410D6

DATE 12/02 | SHEET 1 OF 1

Date

Designed

Drawn

Checked

Approved

NRCS
NATURAL RESOURCES CONSERVATION SERVICE
UNITED STATES DEPARTMENT OF AGRICULTURE

File No.

Drawing No.

Sheet of