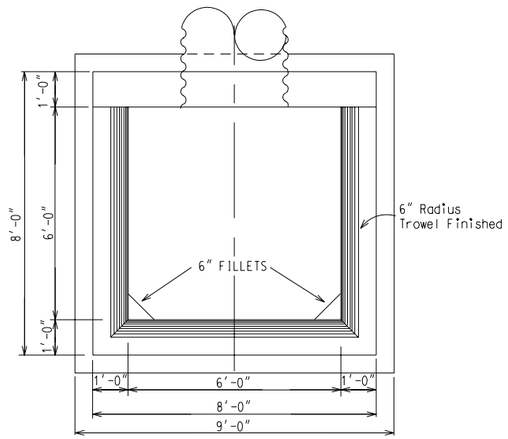

PLAN

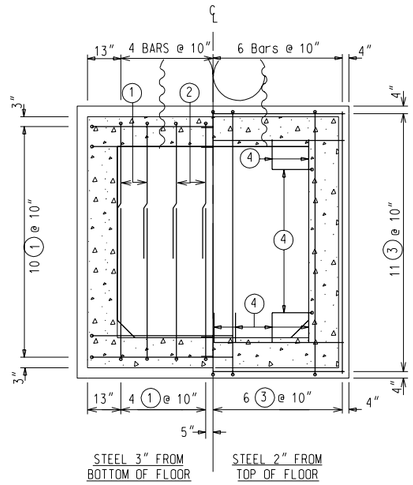

PLAN FLOOR SLAB

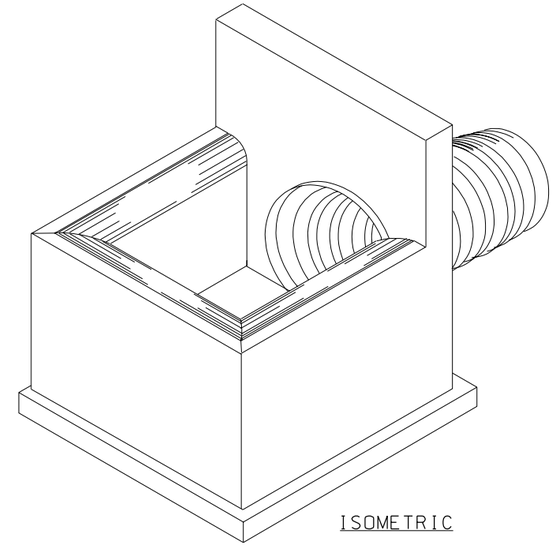

ISOMETRIC

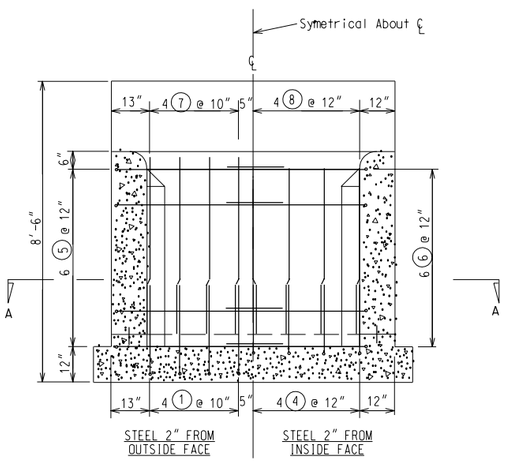

UPSTREAM WALL
ELEVATION

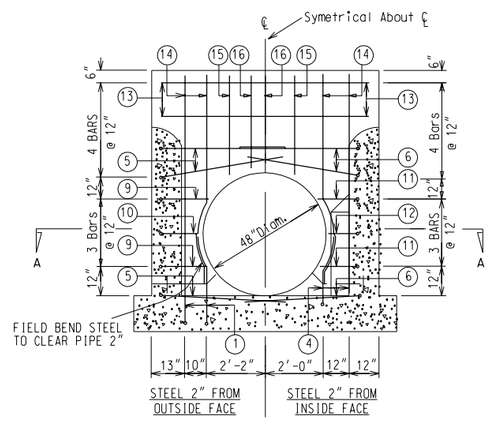

DOWNSTREAM WALL
ELEVATION

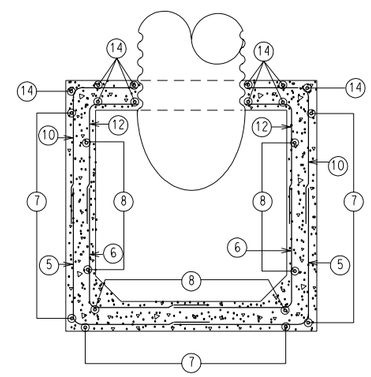

SECTION A-A

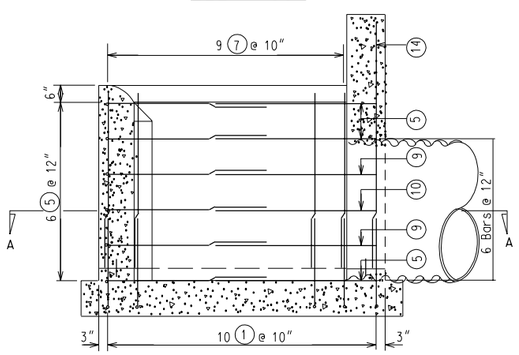

SIDE WALL ELEVATION

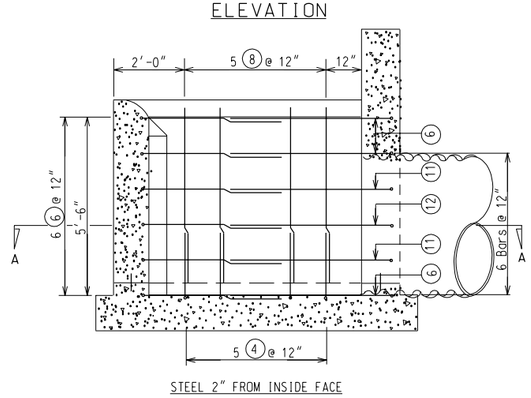

SIDE WALL ELEVATION

NOTE:
1/4" x 6" Carbon Steel Plate Shall Be Continuous Around Inlet Except At C.M. Pipe As Shown.

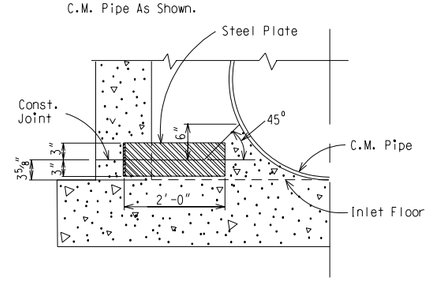

PLATE CONSTRUCTION
JOINT DETAIL

STEEL SCHEDULE

FOR TYPICAL BAR TYPES REFER TO
A.C.I. STANDARD 315 - 65

LOCATION	MARK	SIZE	QUAN.	LENGTH	TYPE	C	D	TOTAL FT.
FLOOR SLAB	1	4	32	7'-0"	17	4'-6"	2'-6"	224'-0"
UPSTREAM,	2	4	4	4'-6"	ST.			18'-0"
DOWNSTREAM,	3	4	22	8'-6"	ST.			187'-0"
AND SIDEWALLS	4	4	21	3'-3"	17	2'-0"	1'-3"	68'-3"
SIDEWALLS & UPSTREAM WALL	5	4	18	9'-0"	17	4'-6"	4'-6"	168'-0"
	6	4	18	8'-0"	17	4'-0"	4'-0"	144'-0"
	7	4	26	5'-0"	ST.			130'-0"
	8	4	17	4'-9"	ST.			80'-9"
SIDEWALLS & DOWNSTREAM WALLS	9	4	4	6'-6"	17	4'-6"	1'-9"	26'-0"
	10	4	2	6'-3"	17	4'-6"	1'-6"	12'-6"
	11	4	4	5'-3"	17	4'-0"	1'-3"	21'-0"
	12	4	2	5'-0"	17	4'-0"	1'-0"	10'-0"
DOWNSTREAM WALLS	13	4	4	7'-6"	ST.			30'-0"
DOWNSTREAM WALLS	14	4	10	7'-0"	ST.			70'-0"
DOWNSTREAM WALLS	15	4	4	3'-3"	ST.			13'-0"
DOWNSTREAM WALLS	16	4	3	3'-0"	ST.			9'-0"

QUANTITIES

#4 BARS 1,205.50 LIN. FT. 805.3 LBS.
CLASS 4,000 CONCRETE 8.9 CU. YDS.
1/4" CARBON STEEL PLATE 25'-0" LONG
FOR ONE CONSTRUCTION JOINT

NOTES AND SPECIFICATIONS

REVISIONS		
DATE	APPROVED	TITLE

Date
Designed
Drawn
Checked
Approved

NRCS
NATURAL RESOURCES CONSERVATION SERVICE
UNITED STATES DEPARTMENT OF AGRICULTURE

File No.
Drawing No.
Sheet of

CONCRETE BOX INLET DETAILS FOR 48" DIAMETER PIPE

STANDARD DWG. NO. FL-410D7
DATE 12/02 SHEET 1 OF 1