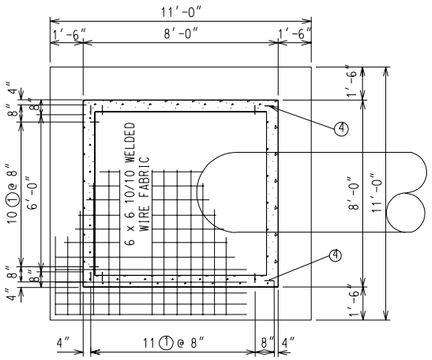

PLAN

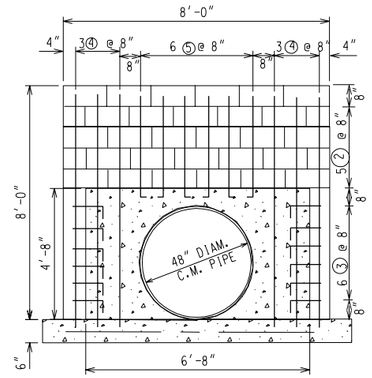

BACK WALL

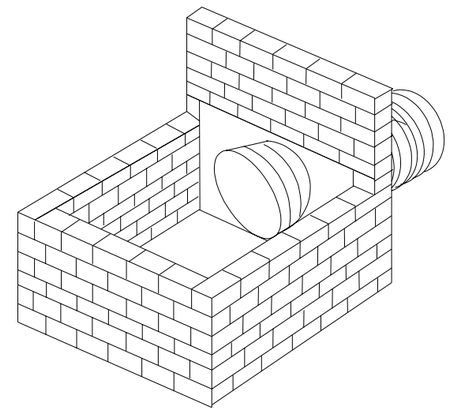

ISOMETIC VIEW OF INLET BOX & PIPE

STEEL SCHEDULE

For Typical Bar Types Refer To ACI Standard 315-65

LOCATION	MARK	SIZE	QUAN.	LENGTH	TYPE	A	B	TOTAL FT.
FRONT AND SIDE WALLS	1	3	32	4'-6"	2	6"	4'-0"	144'-0"
FRONT SIDE AND BACK WALLS	2	MASONRY JOINT REINFORCEMENT						
BACK WALL	3	3	12	1'-6"	2	6"	1'-0"	18'-0"
BACK WALL	4	3	6	8'-6"	2	6"	8'-0"	51'-0"
BACK WALL	5	3	6	4'-0"	2	3"	3'-9"	24'-0"

Note: Mark No. 2 Shall Be Masonry Joint Reinforcement. Joint Reinforcement Shall Be Fabricated From Steel Wire Conforming To ASTM A82. Longitudinal Wires May Be Smooth Or deformed And Shall Not Be Lighter Than 0.1483 in. in Nominal Diameter (9 Gage). Cross Wires Shall Not Be Lighter Than 0.1055 in. in Nominal Diam. (12 Gage).

LIST OF MATERIAL FOR BOX INLET

Class 3000M Concrete 4.40 Cu. Yds.

10'-6"X10'-6" 6X6 10/10 Welded Wire Fabric 110.3 Sq.Ft. 23.2lbs.

Reinforcing Steel #3 Bars 237.0 Lin. Ft. 89.1lbs

Masonry Joint Reinforcement 150 Lin. Ft.

Concrete Block, 8"X8"X16" = 127

Concrete block, 8"X8"X8" = 12

BAR TYPE

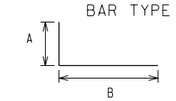

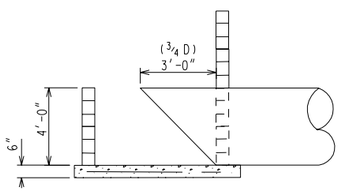

SECTION ALONG ℄ OF PIPE

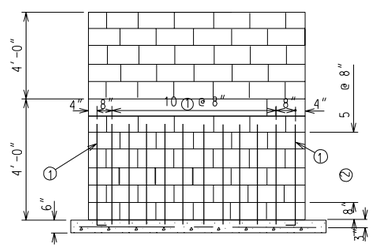

FRONT WALL

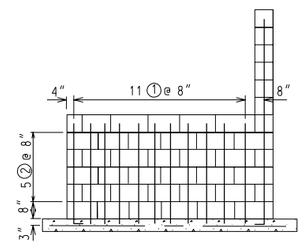

SIDE WALL

Date

Designed

Drawn

Checked

Approved

NRCS
NATURAL RESOURCES CONSERVATION SERVICE
UNITED STATES DEPARTMENT OF AGRICULTURE

File No.

Drawing No.

Sheet of

CONCRETE BLOCK BOX HOODED INLET FOR 48" DIAMETER PIPE	
STANDARD DWG. NO. FL-410E6	
DATE 12/02	SHEET OF

REVISIONS

DATE	APPROVED	TITLE