PAVEMENT AND SODDING QUANTITIES FOR TRAVERSABLE SLOT						
Inlet	Pavement				Sod	
	Single Slot		Double Slot		Single Slot	Double Slot
	SY	CY	SY	CY	SY	SY
C	4.87	1.03	6.16	1.24	12	16
D	5.99	1.21	7.70	1.47	14	19
E	5.88	1.21	7.37	1.44	14	18

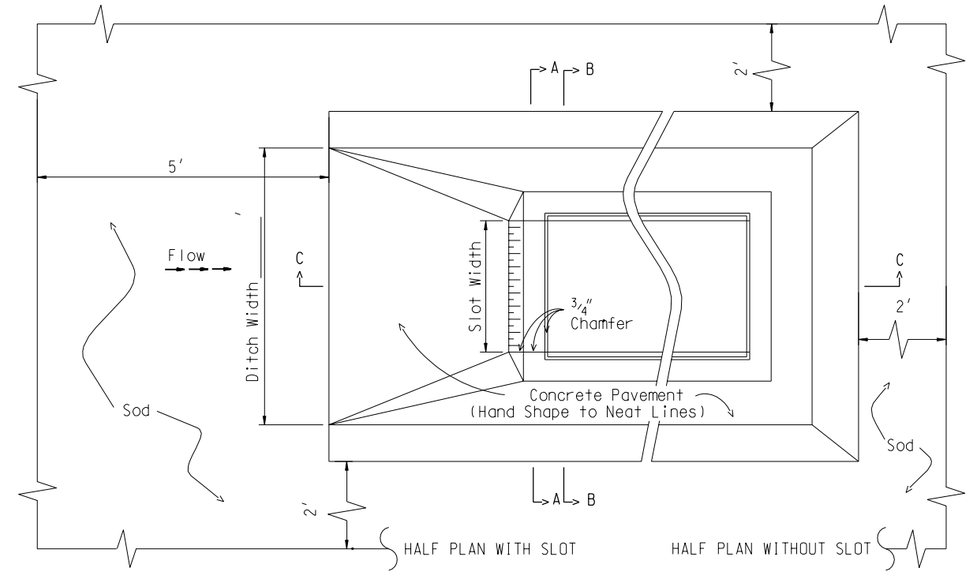

PLAN VIEW

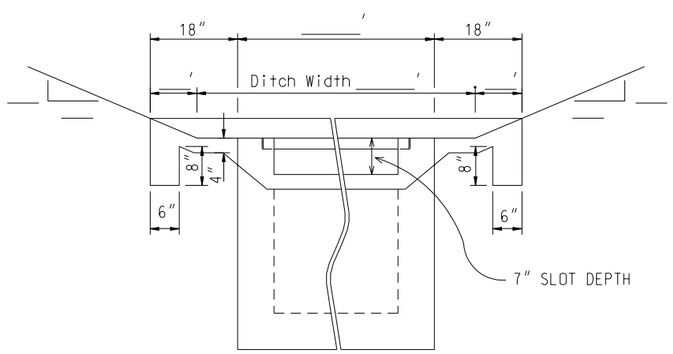

SECTION AA

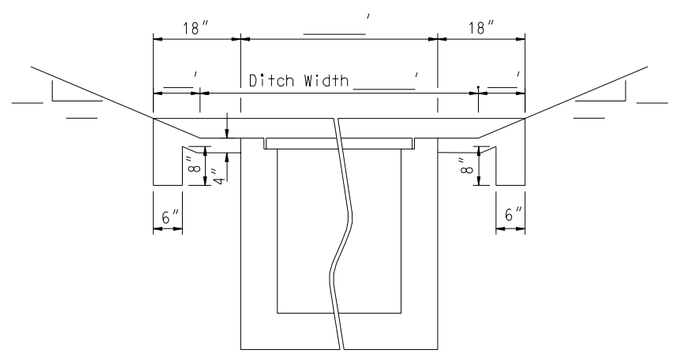

SECTION BB

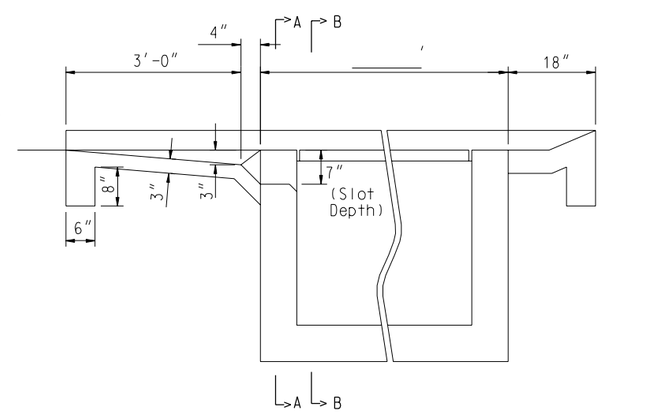

SECTION CC

TRAVERSABLE SLOTS FOR TYPE C, D, AND E INLETS

STANDARD DWG. NO. FL-410H1

DATE 12/02 SHEET 1 OF 1

REVISIONS		
DATE	APPROVED	TITLE

Date

Designed

Drawn

Checked

Approved

NRCS NATURAL RESOURCES CONSERVATION SERVICE UNITED STATES DEPARTMENT OF AGRICULTURE

File No.

Drawing No.

Sheet of