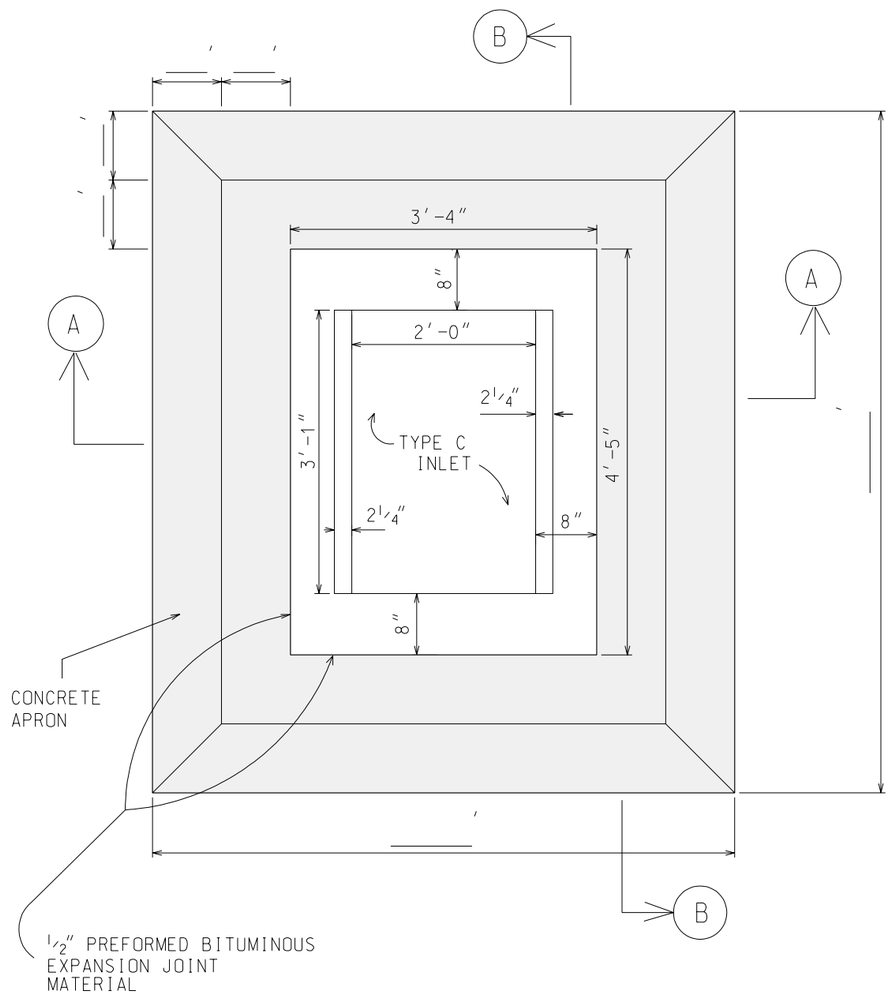


PLAN
NTS

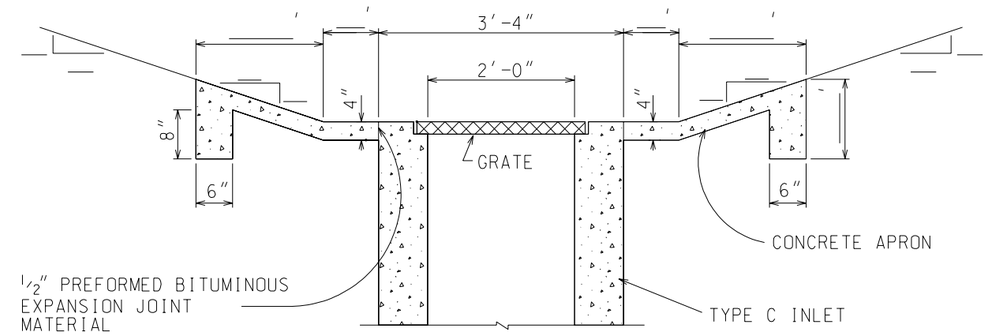


SECTION A-A
NTS

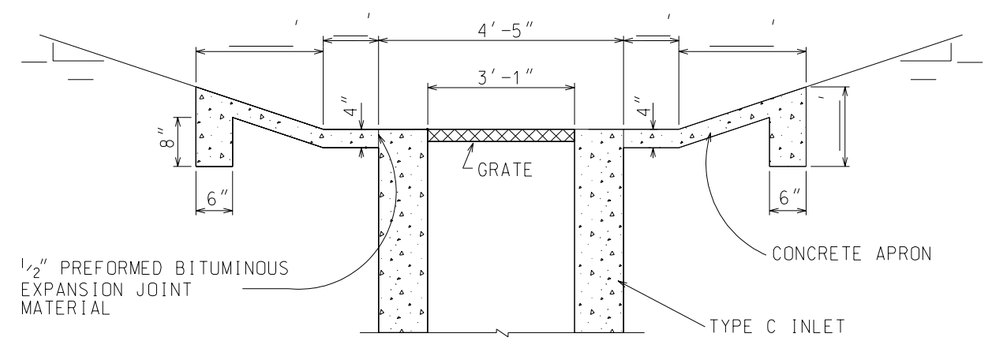


SECTION B-B
NTS

| CONCRETE APRON FOR TYPE C INLET (NO SLOTS) | |
|---|---|
| | |
| STANDARD DWG. NO. | FL-410H2 |
| DATE 12/02 | SHEET 1 OF 1 |

| REVISIONS | | |
|---|---|---|
| DATE | APPROVED | TITLE |
| | | |
| | | |
| | | |

Date
Designed
Drawn
Checked
Approved

NRCS
NATURAL RESOURCES CONSERVATION SERVICE
UNITED STATES DEPARTMENT OF AGRICULTURE

File No.
Drawing No.
Sheet of