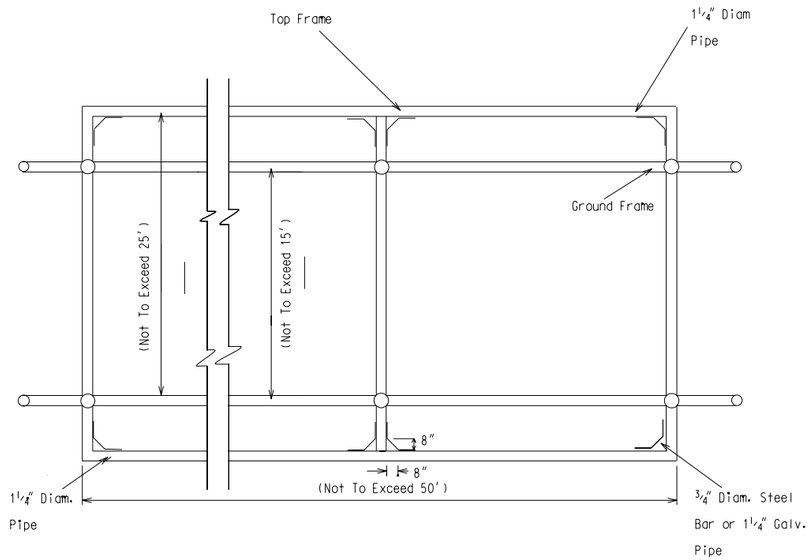

TOP VIEW

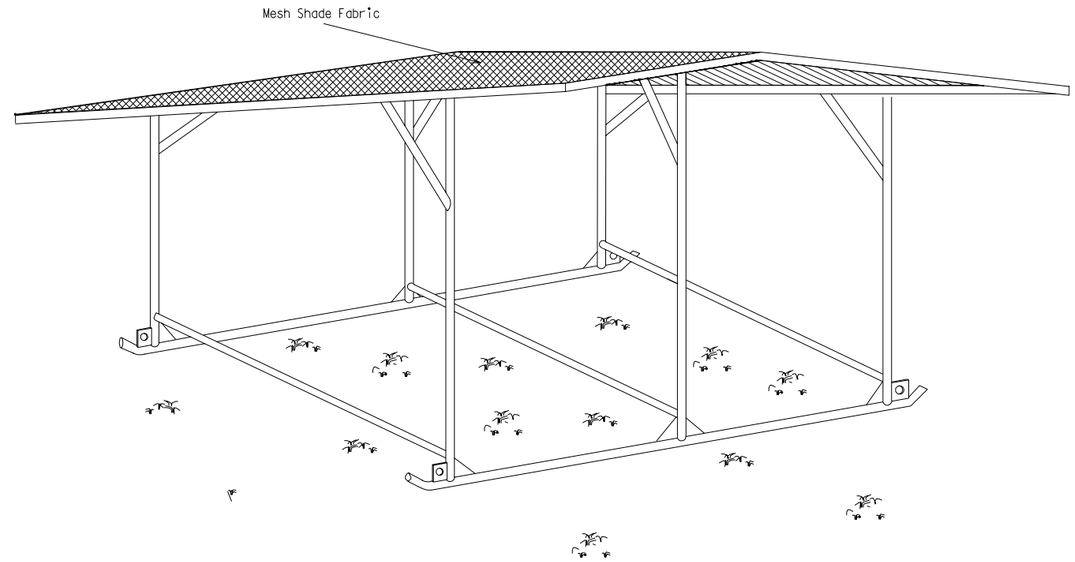

ISOMETRIC VIEW

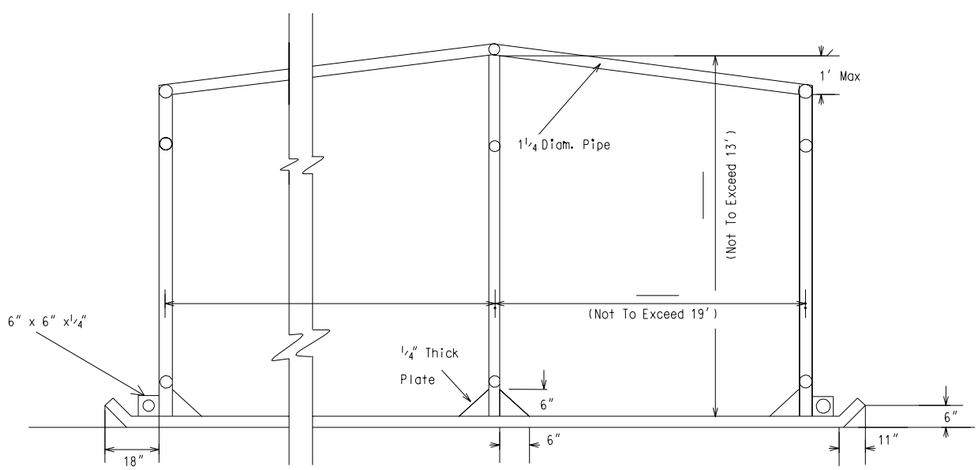

SIDE VIEW

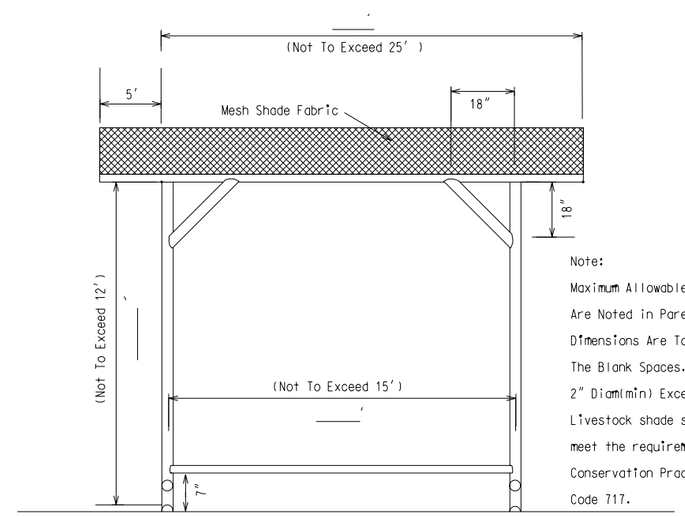

END VIEW

Note:
Maximum Allowable Dimensions Are Noted in Parenthesis. Planned Dimensions Are To Be Inserted In The Blank Spaces. All Pipes Are 2" Diam(min) Except Where Noted. Livestock shade structure shall meet the requirement of NRCS Conservation Practice Standard, Code 717.

LIVESTOCK SHADE STUCTURE	
STANDARD DWG. NO. FL-473	
DATE 12/02	SHEET OF

REVISIONS		
DATE	APPROVED	TITLE

Date
Designed
Drawn
Checked
Approved

NRCS
NATURAL RESOURCES CONSERVATION SERVICE
UNITED STATES DEPARTMENT OF AGRICULTURE

File No.
Drawing No.
Sheet of