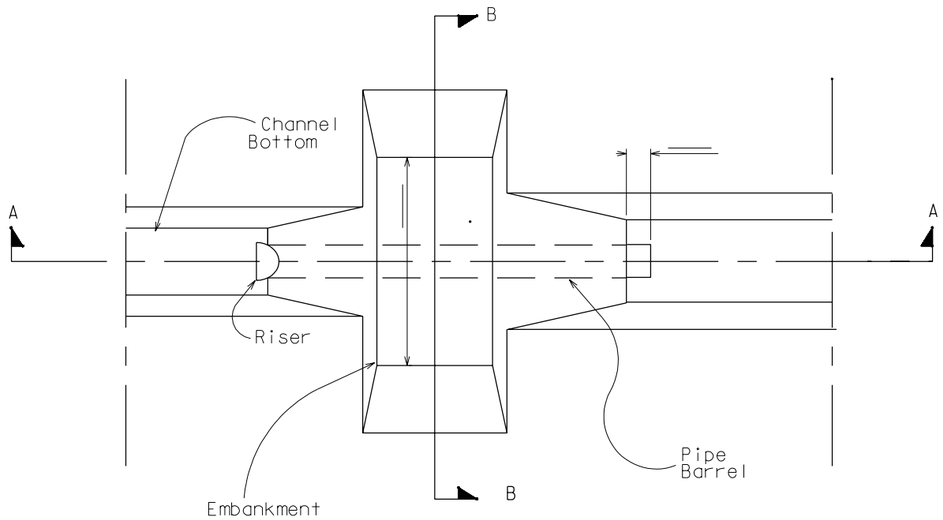

TYPICAL PLAN VIEW

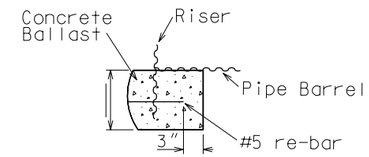

DETAIL -A

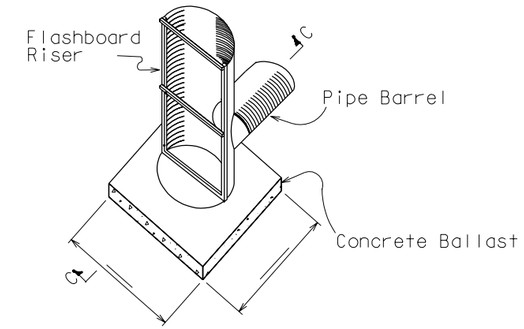

RISER

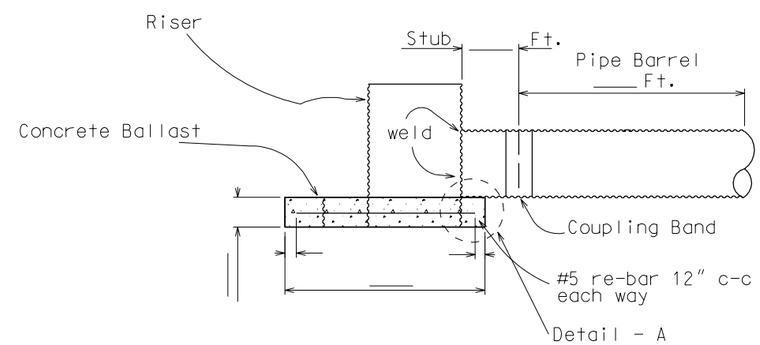

SECTION C-C

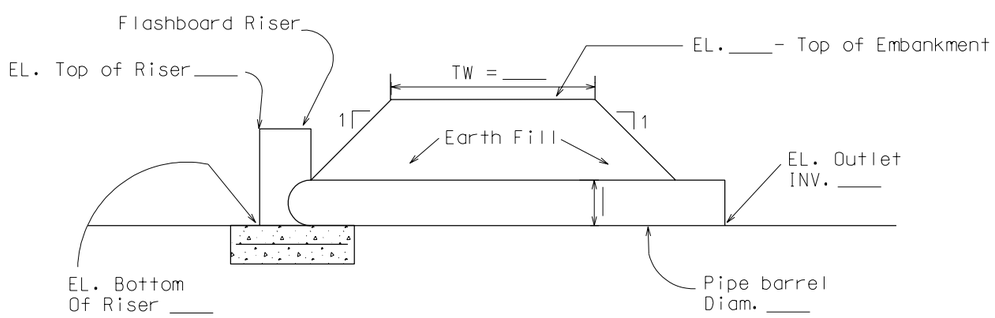

SECTION A-A

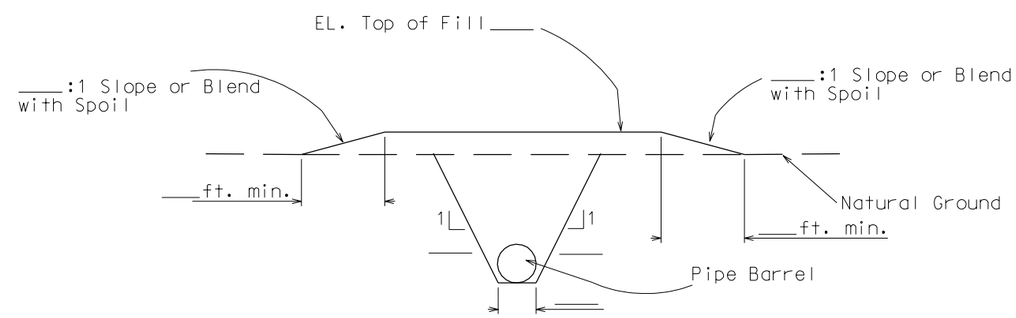

SECTION B-B

STRUCTURE FOR WATER CONTROL - FLASHBOARD RISER	
STANDARD DWG. NO. FL- 587A	
DATE 12/02	SHEET OF

REVISIONS		
DATE	APPROVED	TITLE

Date

Designed

Drawn

Checked

Approved

NRCS
NATURAL RESOURCES CONSERVATION SERVICE
UNITED STATES DEPARTMENT OF AGRICULTURE

File No.

Drawing No.

Sheet of