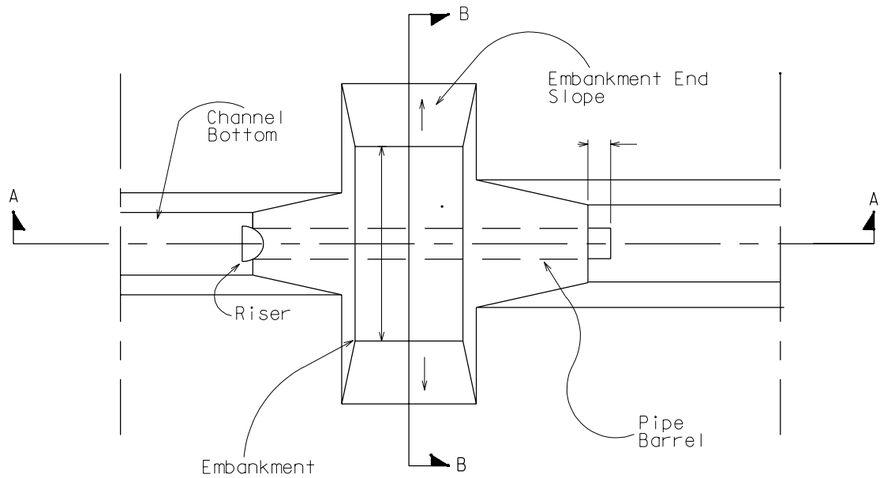

TYPICAL PLAN VIEW

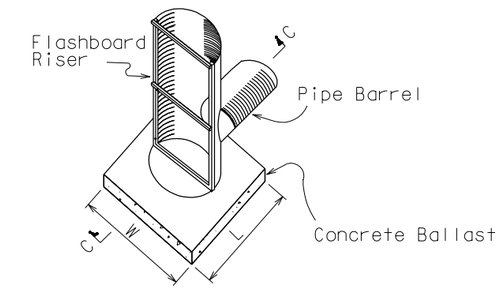

RISER

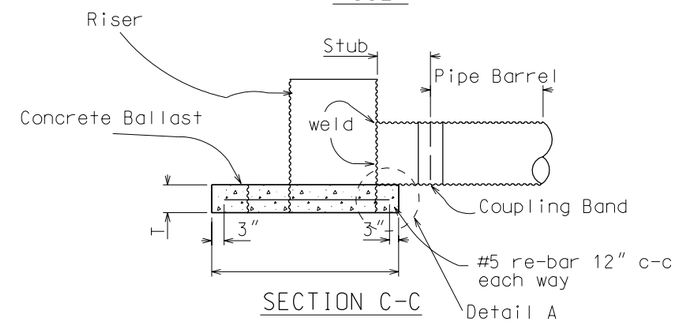

SECTION C-C

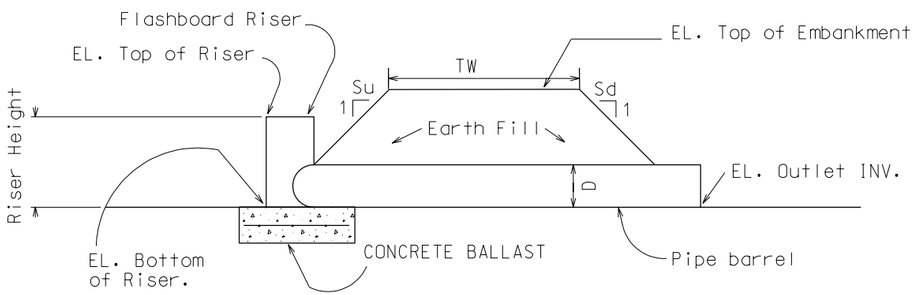

SECTION A-A

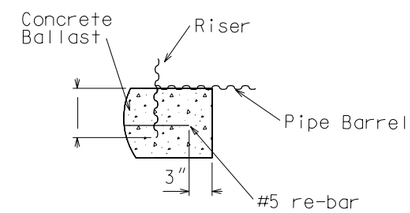

DETAIL -A

		PIPE INFORMATION						RISER INFORMATION									EMBANKMENT INFORMATION				
												CONCRETE BALLAST							SIDE SLOPE		
STR. NO.	STATION	PIPE DIAM.(D) {FT.}	PIPE INV.EL. {FT.}	PIPE OUT. EL. {FT.}	PIPE LENGTH {FT.}	PIPE GAGE	CONNECTING BAND GAGE	RISER DIAM. {FT.}	RISER HEIGHT {FT.}	RISER GAGE	STUB LENGTH {FT.}	LENGTH(L)	WIDTH(W)	THICKNESS(T)	(CU. YDS.)	TOTAL #5 REBAR {FT.}	TOP EL. {FT.}	TW {FT.}	Su UPSTREAM	Sd DOWNSTREAM	EMBANKMENT END SLOPE

STRUCTURE FOR WATER CONTROL - FLASHBOARD RISERS

STANDARD DWG. NO. FL-587B

DATE 12/02 SHEET OF

REVISIONS		
DATE	APPROVED	TITLE

Date

Designed

Drawn

Checked

Approved

NRCS
NATURAL RESOURCES CONSERVATION SERVICE
UNITED STATES DEPARTMENT OF AGRICULTURE

File No.

Drawing No.

Sheet of