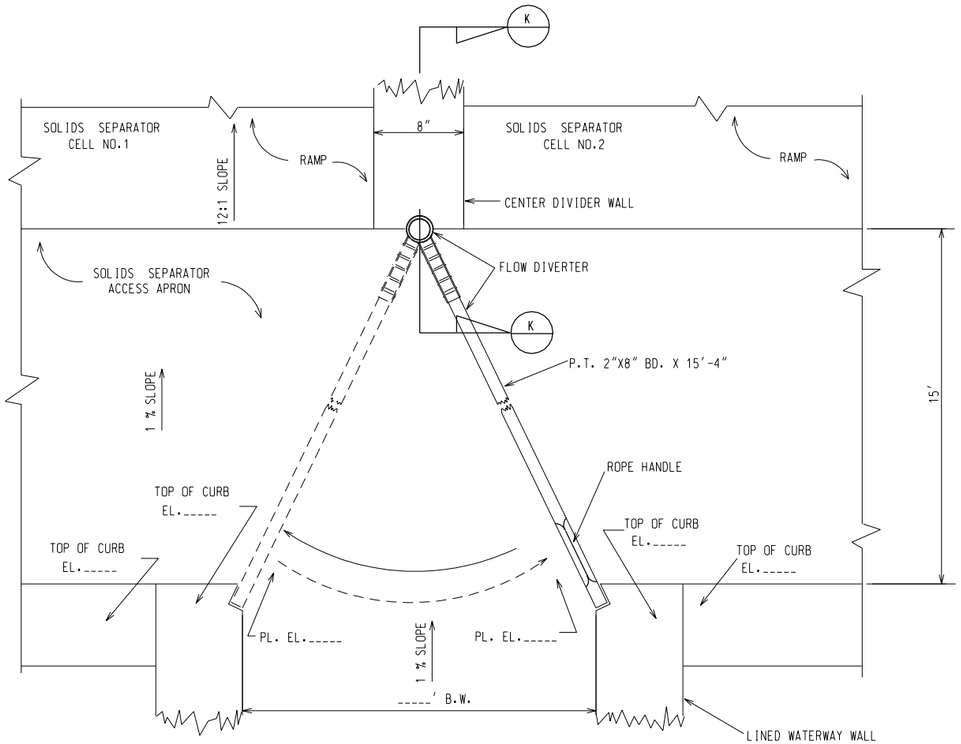

FLOW DIVERTER
PLAN VIEW
(N.T.S.)

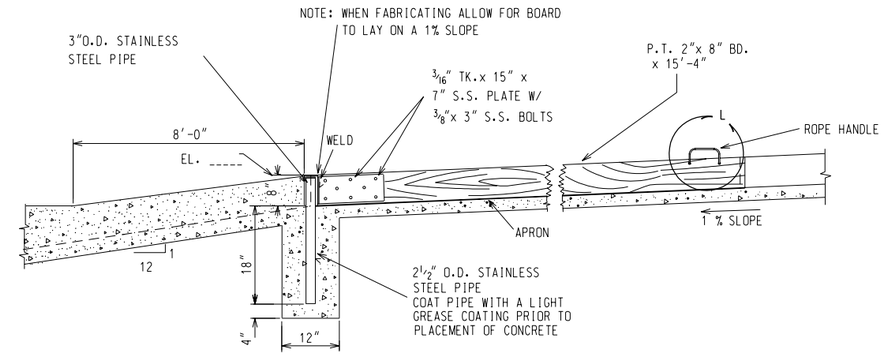

FLOW DIVERTER
SECTION VIEW
(N.T.S.)

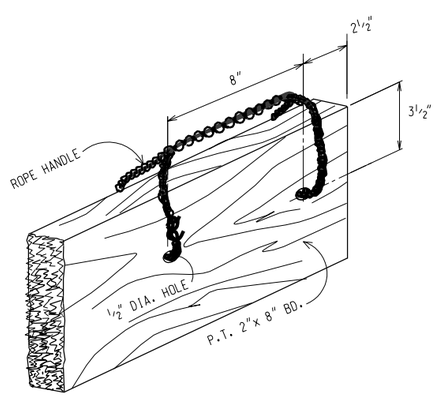

DETAIL-L
(N.T.S.)

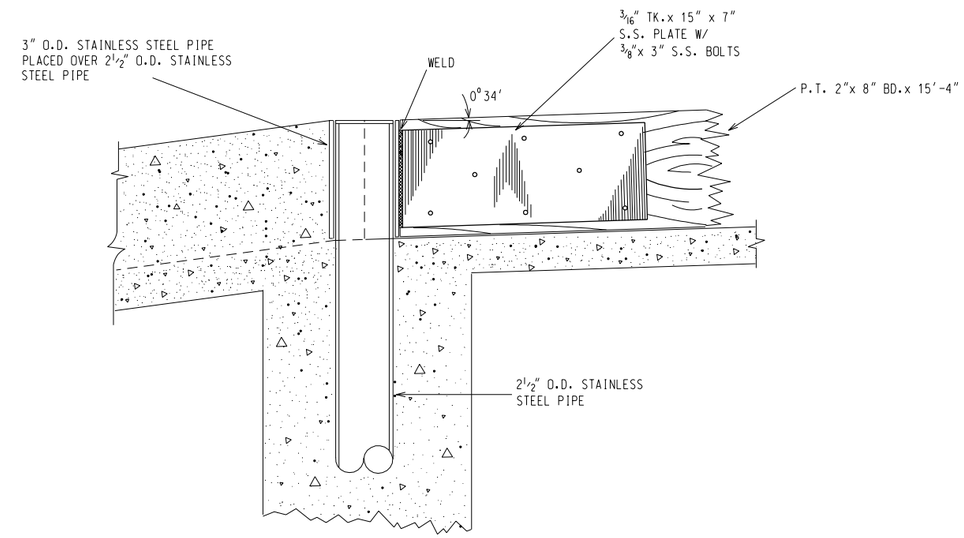

SECTION K
(N.T.S.)

MANURE SOLIDS SEPARATOR - INLET DETAILS	
STANDARD DWG. NO. FL-801A3	
DATE 12/02	SHEET OF

REVISIONS		
DATE	APPROVED	TITLE

Date
Designed
Drawn
Checked
Approved

NRCS
NATURAL RESOURCES CONSERVATION SERVICE
UNITED STATES DEPARTMENT OF AGRICULTURE

File No.
Drawing No.
Sheet of