NY–ENG–659B
July 2003

Dig Safely. New York
800-962-7962
www.digsafelynewyork.org

- ☐ Call Before You Dig
- ☐ Wait The Required Time
- ☐ Confirm Utility Response
- ☐ Respect the Marks
- ☐ Dig With Care

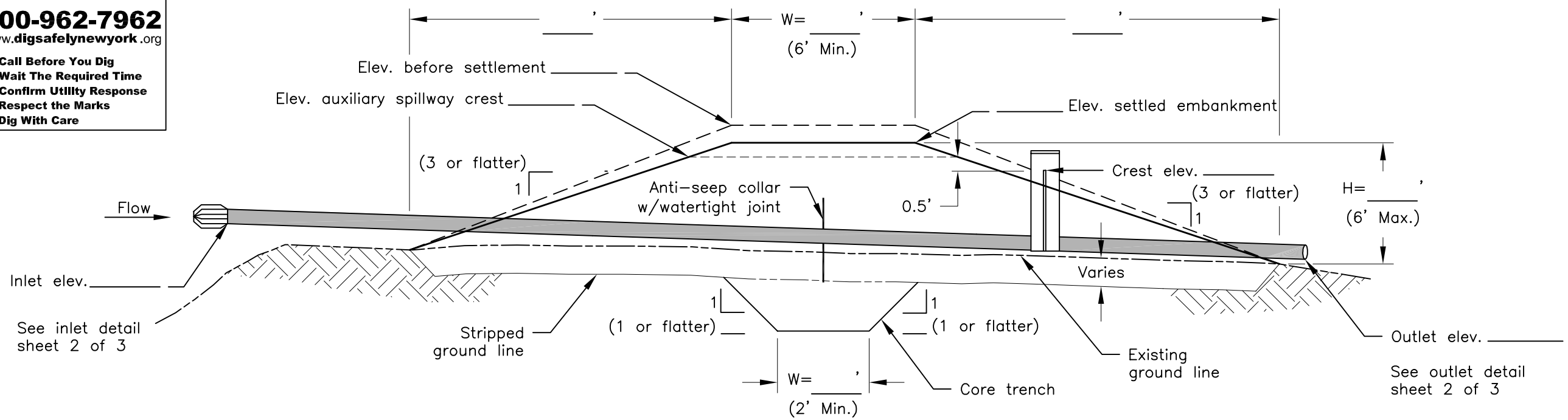

TYPICAL CROSS–SECTION

B.M. Elev. _____

B.M. Desc. _____

_____

NOT TO SCALE

PLAN VIEW

REVISIONS			
Date Revised	Item(s) Revised	Revised by	Approved by

File Name: ny–eng–659b_1–3_low_embnk_b.dwg

Date
Designed
Drawn
Checked
Approved
Title

WETLAND ENHANCEMENT – 659
LOW EMBANKMENT – TYPE B

NRCS
U. S. DEPARTMENT OF AGRICULTURE
NATURAL RESOURCES CONSERVATION SERVICE
NEW YORK

NRCS Drawing Name

NRCS Project ID

Sheet 1 of 3