NY–ENG–659B
July 2003

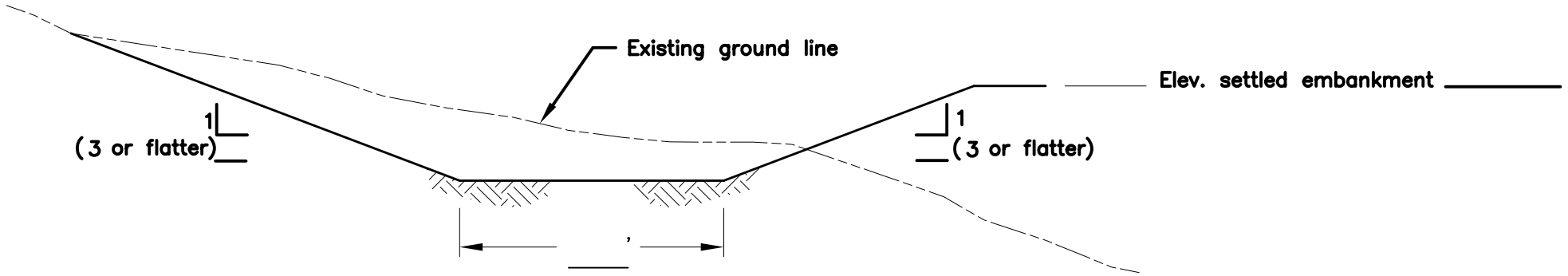

TYPICAL CROSS–SECTION OF AUXILIARY SPILLWAY
AT CENTER LINE OF EMBANKMENT (A–A)

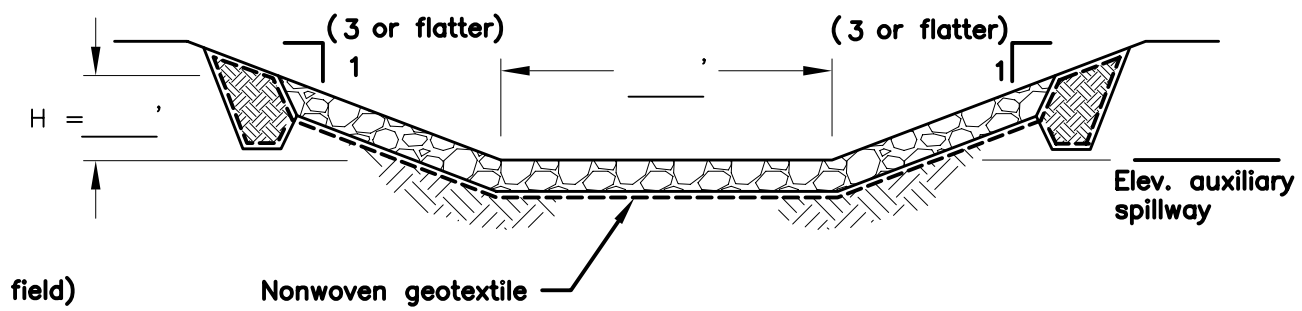

TYPICAL CROSS–SECTION
OF AUXILIARY SPILLWAY ROCK LINING (C–C)

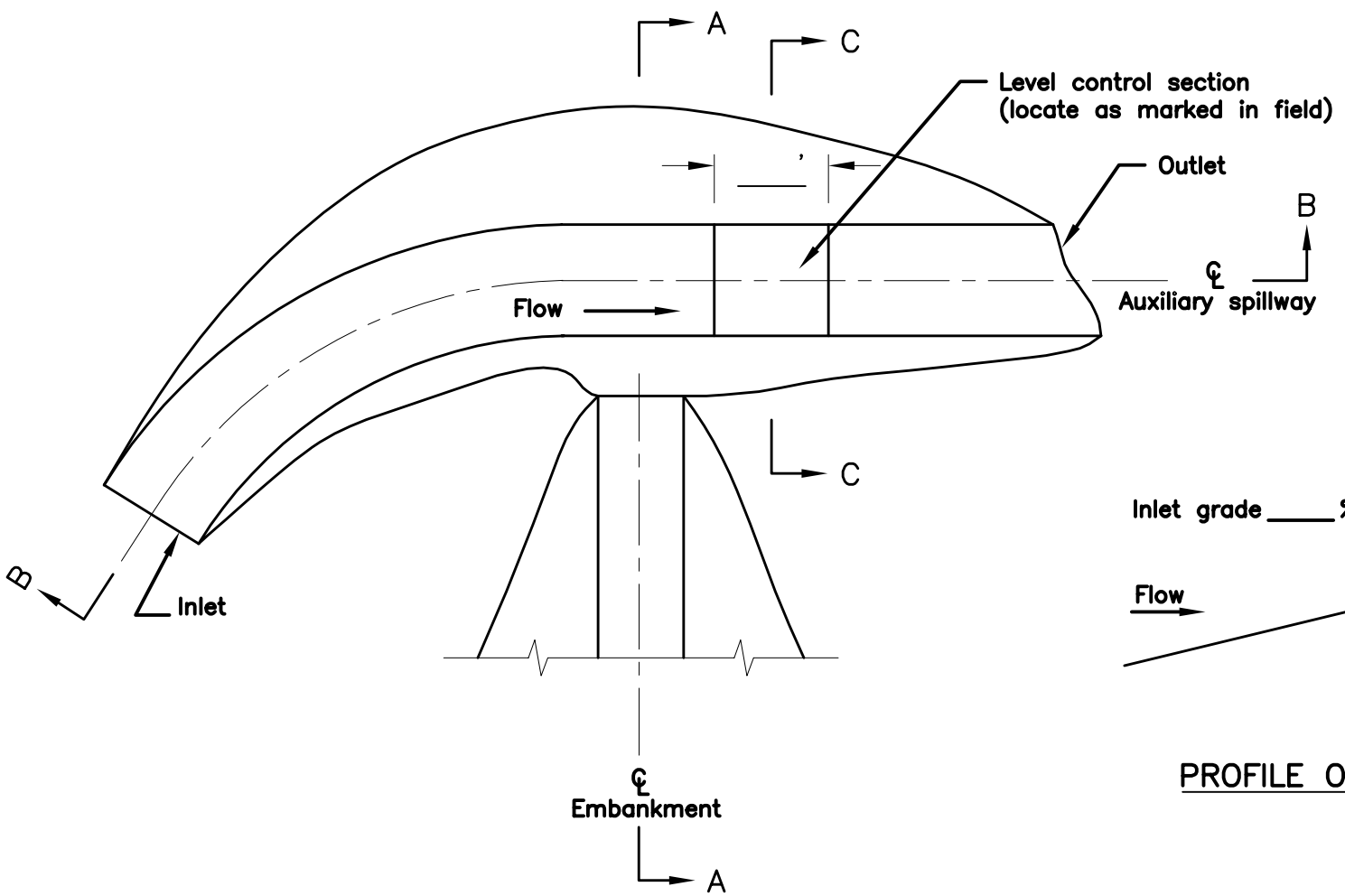

PLAN VIEW

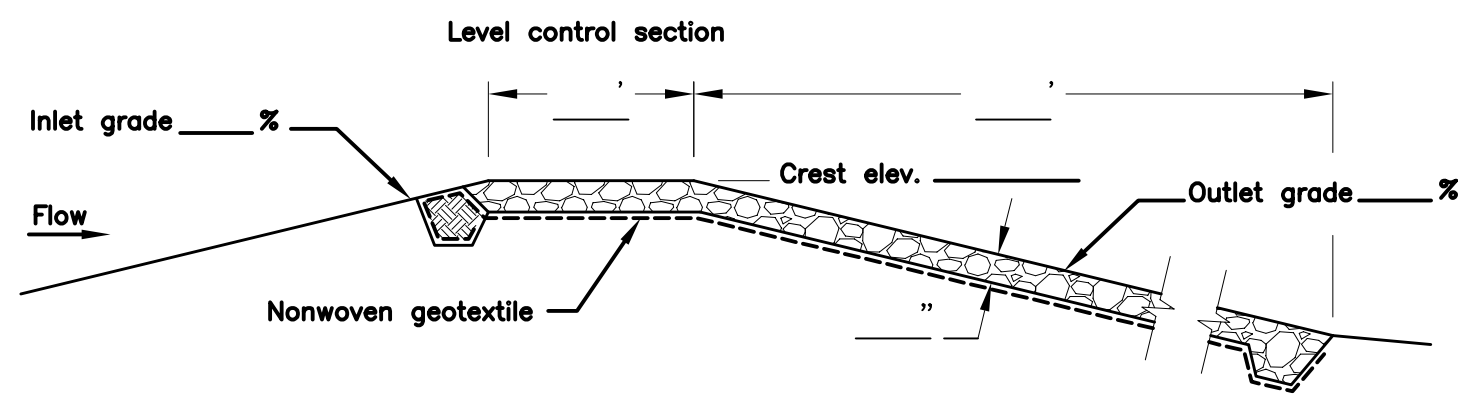

PROFILE ON CENTER LINE OF AUXILIARY SPILLWAY (B–B)

Rock size: d_{50}=

ESTIMATED QUANTITIES		
ITEM	UNIT	QUANTITY
Rock	C.Y.	
Gravel	C.Y.	
Geotextile	Sq. Yd.	

NOT TO SCALE

REVISIONS			
Date Revised	Item(s) Revised	Revised by	Approved by

ROCK LINED AUXILIARY SPILLWAY DETAILS

File Name: ny–eng–659b_3–3r_low_embnk_b.dwg

Date
Designed
Drawn
Checked
Approved
Title

WETLAND ENHANCEMENT – 659
LOW EMBANKMENT – TYPE B

NRCS
U. S. DEPARTMENT OF AGRICULTURE
NATURAL RESOURCES CONSERVATION SERVICE
NEW YORK

NRCS Drawing Name

NRCS Project ID

Sheet 3 of 3