WILDLIFE GUZZLER
DRAWING 1

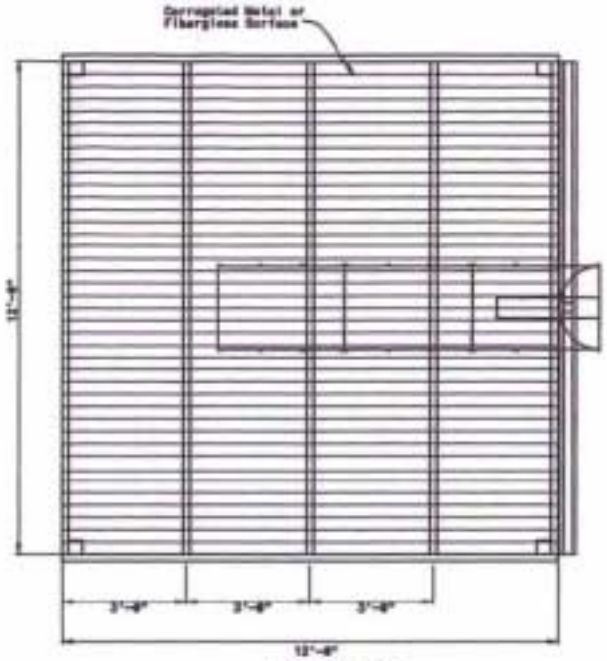

TOP VIEW

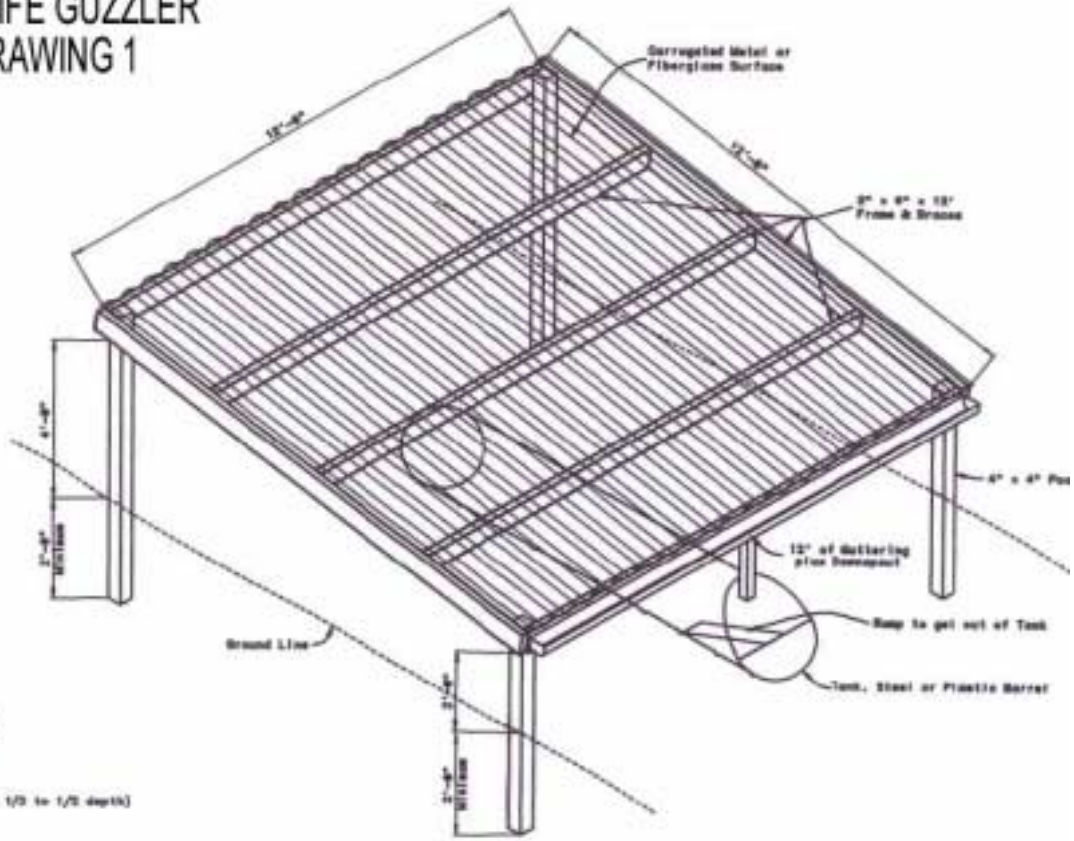

ISOMETRIC VIEW

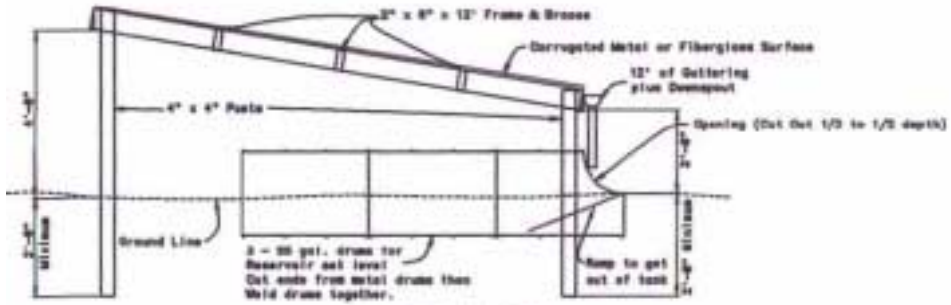

SIDE ELEVATION

OPTION 1 — 3 - 55 Gallon Metal Drums welded together

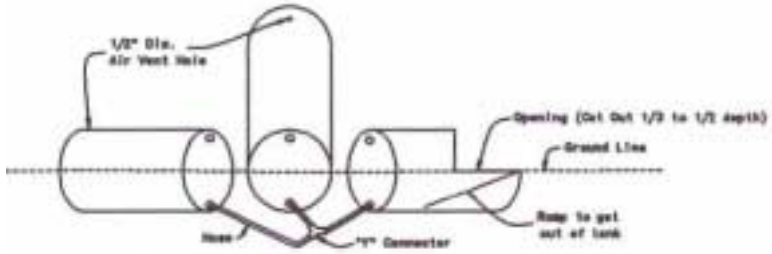

OPTION 2 — Interconnected Plastic Barrels with "Y" connector

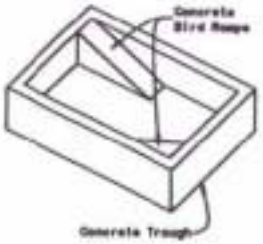

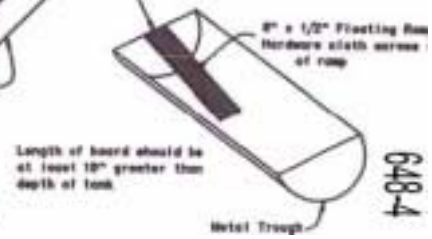

RAMP EXAMPLES