NORTH CAROLINA SUPPLEMENT - 382-1

U.S. DEPARTMENT OF AGRICULTURE
Soil Conservation Service

Technical Guide
Section IV
Rev. September 1994

Fence (pen & ink change 11/05)
~~FENCING~~ (Feet)

Planning Considerations

Livestock fences should be planned in relationship to water facilities and to bring about better distribution of grazing. The type and height of fence should be planned to hold specific kinds of livestock. Terrain and soils will affect the ease of constructing fence and subsequent cost of the fencing. The most feasible and practical fence for each site condition should be planned.

Specification Guide

1. **Fence Line Clearing**

Fence lines will be cleared of brush and trees; gullies and steep banks may require grading. Clearing along streambanks will be held to a minimum.

2. **Fence Types**

Zinc coating shall be a minimum of Class I or 0.30 ounces per square foot of surface.

a. Woven Wire

The styles and designs of woven wire fencing are designated by a three- or four-digit number; for example, 1047 or 939. The first or first two digits indicate the number of line wires in the fencing and the last two indicate the height in inches. For example, 1047-12 has 10 line wires, is 47 inches high, and the stay wires are 12 inches apart. The weight of woven wire fencing is determined by the gauge, or size, the number of stay wires, and the filler or intermediate line wires. The lower the gauge number the larger the wire, and the larger the wire the stronger and more durable the fencing.

Field or stock fencing shall meet one of the following fence types:

	Height	Type
Horses	47 inches	1047-12
Cattle	39 inches	939-6
Sheep, Goats, & Hogs	32 inches	832-6

	Gauge of Top and Bottom Line Wires	Gauge of Filler (Intermediate Line Wires)
Medium weight	10	12-1/2
Heavy weight	9	11

The stay (vertical) wires in the fencing shall be of the same gauge as the filler wires (intermediate line) and shall be spaced 6 to 12 inches apart.

Woven wire fence shall have 1 strand of barbed wire placed 4 to 5 inches above the woven wire. Fences for hogs will also include 1 strand of barbed wire placed 2 inches below the woven wire to discourage rooting under the fence.

b. Barbed Wire

All barbed wire shall consist of 2 strands of wire with 4 point barbs spaced not more than 5 inches apart. Galvanized barbed wire shall be fabricated from 12-1/2 gauge or 15-1/2 gauge strand wire and shall meet the requirements of ASTM A121.

Barbed wire fence shall consist of at least 4 strands of 4 point 12-1/2 or 15-1/2 gauge barbed wire. Spacing of wire for cattle will be (from the ground to the top) 16 inches, 10 inches, 10 inches, and 10 inches. Closer spacing will be required for sheep and goats and additional wires may be required for boundary fences or for small enclosures. See information sheet NC-ECS-124 for spacing.

Three-wire fences are sufficient for cross fences where the purpose is rotation of cattle in an intensive grazing management system.

c. High Tensile Non-electric Fence

One of the first steps is determining the type of high tensile fence required and the fence design. High tensile fence shall be a minimum of 12-1/2 gauge and have tensile strength of 135,000 PSI (ASTM 135).

Ground the fencing for safety from lightning. Typical spacing from ground to top wire.

(a) Six (6) strands for cattle - 14 inches, 5 inches, 6 inches, 6 inches, 7 inches, 8 inches (Height 46 inches).

(b) Six (6) strands for sheep - 4 inches, 5 inches, 5 inches, 5 inches, 6 inches, 6 inches, 7 inches (Height 38 inches).

(d) Wooden Fences

Wooden fences shall consist of 1" x 8" treated lumber supported by post 8 feet on center. Spacing of the boards will be (from the ground to the top of each board) 16", 32", 48", 64". For corrals and small lots, the 1" x 8" board should be replaced with 2" x 8" lumber and a fifth board will be added when the class of livestock requires a higher fence for small enclosures. One inch boards shall be nailed with 2 - 12d nails per post and 2" lumber shall be nailed with 2 16d nails per post.

(e) Electric Fence - See section on electric fence, pages 382-6 to 382-12.

3. **Post and Braces**

The fence shall be supported by line posts, spaced 12 feet apart for woven wire and 10 feet apart for barbed wire and 8 feet apart for wooden fences. For high tensile wire, maximum spacing will be in accordance with manufacturer's recommendations.

Spacing should be less for abrupt changes in terrain, small enclosures, and for hogs. Line posts for conventional fences may be spaced up to 16-1/2 feet for short distance in low use areas and where soil or terrain conditions prohibit closer spacing. Brace posts shall be set 8 feet from corner or anchor posts. The general use of existing trees as line posts is not recommended. Wood posts and braces shall be of black locust, red cedar, osage orange, redwood, pressure treated pine or other wood of equal life and strength. At least half the diameter of red cedar or redwood posts shall be in heartwood. Pressure treatment shall conform to Material Specifications 585. The posts shall be sound, new, free from decay, with all limbs trimmed substantially flush with the body. They shall be substantially straight throughout their length. Anchor posts shall be used any time there is a curve creating an angle less than 160 degrees in the fence line.

a. Wood Posts

Line Post For Wire Fences - shall be at least 3-1/2 inches in diameter at the small end and 6-1/2 feet long. Line post shall be set 2 feet into the ground.

Anchor Post for Wire Fences - shall be at least 5 inches in diameter at the small end and 8 feet long. Anchor post shall be set 3-1/2 feet into the ground.

Post for Wooden Fences - Shall be 8 feet long and set 2 1/2 feet in the ground.

b. Steel Line Fence Posts

Steel fence posts shall conform to the requirements of Federal Specification RR-F-221/3A. Posts shall be 6 feet long. Posts with punched tabs for fastening the wires shall not be used. The following steel posts are acceptable for line post.

Style 1 - "T" Section 1-3/8" x 1-3/8" x 1/8" thick
Style 2 - "U" Section 2" x 1-1/4" x 3/32"
Style 3 - "L" Section 2" x 2" x 1/4"

c. Fiberglass Posts

Anchor Posts - shall be at least 2 inches in diameter and set 4 feet in the ground anchored with an 8" x 8" plate at the bottom of the post. Anchor posts shall be braced with a minimum of 8' brace.

Line Posts - shall be 1" in diameter or 1-1/4" T Post. Posts shall be 6 feet long.

Spacers - shall be 1/2" in diameter or 1" T Post. (1-1/2" x 1-1/2" non-conductive wood may be used.) Spacers shall be a minimum of 5 feet long.

4. **Staples**

Staples used to fasten fence wire to wood posts shall be 9-gauge galvanized wire with a minimum length of 1-1/2 inches for soft woods and a minimum length of one inch for close-grain hardwoods.

5. **Brace Installation**

Brace or pull post assembly shall be installed in straight fence sections at intervals not to exceed 330 feet on level land or at other points or changes in slopes and curves for barbed wire or woven wire. For high tensil fence, this distance may be increased to 660 feet. Double span assemblies shall be used for lengths over 165 feet. Brace assembly shall consist of horizontal timbers between posts set 8 feet apart with a double strand of No. 9 gauge wire attached to the top and base of the center pull post or two diagonal timbers placed between pull posts or end assembly may be substituted for horizontal timber with wire brace. Bedlog may be substituted for H-braces where terrain conditions will permit. Bedlog will be a minimum of 4 feet long and be 6" in diameter or 5" X 5". Bedlog shall be perpendicular to the direction of pull. Trench for bedlog should be dug with front sloped at approximately 45° to bottom of trench. Trench shall be 8 inches deep and bedlog tamped tightly in place.

6. **Setting Posts**

All posts shall be set and maintained in a vertical position. Posts may be hand set or set with a post driver. If hand set, all backfilled material shall be thoroughly tamped. Post holes shall be at least 6 inches larger than the diameter or side dimension of the posts. If power driven, wood posts shall be sharpened to a dull point.

Earth backfill around posts shall be thoroughly tamped in layers no thicker than 4 inches and shall completely fill the post hole up to the ground surface. Concrete backfill around posts shall be rodded into place in layers not thicker than 12 inches and shall completely fill the post hole up to the ground surface. Backfill, either earth or concrete, shall be crowned up around posts at the ground surface.

No stress shall be applied to posts set in concrete until at least 24 hours after the concrete has set.

7. **Stretching the Wire**

a. Woven wire - In warm weather, wire shall be stretched until 1/4 of the height of the "tension curve" is removed. In cold weather, remove 1/2 of the tension curve.

b. Barbed wire - In warm weather, a stretch of 100 feet should sag 4 inches in the middle and 2 inches in cold weather.

c. Wire at end posts and corner posts shall be wrapped and attached to itself with 3 twists.

8. **Attaching Fencing to Posts**

The fencing shall be stretched and attached to posts as follows:

a. The fencing shall be placed on the inside of the post facing the area being protected, except on curves. Where appearance is critical, fence may be fastened to the "outside" of the post.

b. The fencing shall be placed on the outside of curves.

c. Non-electric fencing shall be fastened to wooden line posts by means of staples. Woven wire fencing shall be attached as a minimum at alternate horizontal strands. Each strand of barbed wire shall be attached to each post. Staples shall be driven diagonally with the grain of the wood and at a slight downward angle and shall not be driven so tightly as to bind the wire against the post. High tensile

fence will be attached according to manufacturer's recommendation.

d. The fencing shall be fastened to steel line posts with either two turns of 14 gauge galvanized steel or iron wire or the post manufacturer's special wire clips.

e. Wire shall be spliced by means of a Western Union splice or by suitable splice sleeves applied with a tool designed for the purpose. The Western Union splice shall have not less than 8 wraps of each end about the other. All wraps shall be tightly wound and closely spaced. Splices made with splice sleeves shall have a tensile strength not less than 80 percent of the strength of the wire.

9. **Streambank Protection**

Fencing will be placed a minimum of 5 feet from the top of streambanks (10 feet in areas where banks are sloughing).

Safety - Fencing operations can result in painful and serious injury. The following safety measures are recommended.

Wear heavy gauntlet leather gloves to protect hands and wrists, and boots or high shoes to protect legs and ankles. Tough, close-fitting clothing will prevent catching on wire.

When stretching barbed wire, stand on the opposite side of the post from the wire.

Keep chains and wire stretching clamps in good condition.

Carry staples in container or apron instead of in your pockets.

If you handle treated posts, do not rub hands or gloves on face or skin.

10. **Electric Fence**

CRITERIA

I. **Permanent Electric Fence**

1. **Permanency of fence**.

Permanent electric fence is constructed with the intent of being left in place for years. It is the equivalent of any standard non-electric permanent fence. Therefore, the criteria for permanent electric fence requires materials, design and construction that will last for many years with little maintenance.

2. **Number of wires and spacing**.

The number of wires and spacing shall be designed to accomplish the desired result of the fence. The following are suggested wire spacings and electrical charge for different kinds and classes of animals. When multiple wire systems are used, spacing of wires should be designed to insure facial shock when animal attempts to place head between wires.

In most instances in the southeast, an all positive charge fence will normally suffice. If experience shows that the soil on site will dry to the point that it will not cause shock of the animal, then a combination of positive (+) and negative (-) wires should be used.

One and two wire electric fences may be used for within-farm uses such as streamside fencing and subdividing pastures, but may not be used for property line or roadside fencing.

+ = positive charged wire, - = ground wire,
+/- = positive or ground wire

Wires	Animal	Fence Height Inches	Spacing from Ground Inches
1	Cattle	26 to 32	26 to 32+
	Hogs	12	12+
2	Cattle	24 to 36	18 to 24+/-, 24 to 36+
	Cattle Sheep Goats	20 to 30	8 to 10+, 20 to 30+
	Hogs	18	6+, 18+
3	Cattle w/calves Div. Fen.	34 to 44	11 to 18-/+, 23 to 30-, 34 to 44+
	Sheep Goats	32	10+, 20+/-, 32+
	Cattle Horses	46	20+, 34+/-, 46+
	Hogs	18	6+, 12+, 18+
4	Cattle	40	8+/-, 18+, 28+/-, 40+
	Sheep Goats	30 to 38	6 to 16+/-, 12 to 22+, 18 to 30+/-, 30 to 38+
5	Cattle Horses Sheep Goats	50	10+, 20+/-, 30+, 40+/-, 50 +

2. **Wire**

A. Wire shall be 12 1/2 quage, single strand, tensile strength of 130,000 PSI minimum breaking strength for 1 and 2 wire fences and 180,000 PSI minimum breaking strength for 3 or more wire fences, with Type III galvanizing. Barbed wire will not be used on electric fences because of safety hazard.

B. Wires will be attached to line post by a method that allows them to slip. Wires will be attached to stays in a manner that prevents stay slippage along the fence.

C. Splicing of high tensile wire will be accomplished by crimping sleeves or "figure eight knots." See attached drawing.

D. Tying of high tensile wire to end post will be accomplished using "thread through method" or crimping sleeves. See attached drawing.

E. Tension of wires will be designed to maintain the proper average height of the fence wires and tightness to provide wire contact with animals. Tension of wires will be approximately 200 pounds. Where sheep and hair goats are fenced, approximately 300 pounds of tension should be used. Where wild animal pressure is likely, tension should be increased, especially on bottom wires to 400 pounds. In-line wire tighteners will be used to maintain tension on wires.

3. **Line Posts and Offset Brackets**

A. Line posts and stays will be either:

(1) Australian iron wood (eucalyptus), 2 inches in diameter. Attach wire to post by loose clips or running through holes in post. Attach to stays with tight clips to hold in place.

(2) Fiberglass sucker rod of at least 3/4 inch in diameter. Attach wire to post with loose wire clips or by running through holes in post. Attach to stays with tight clips to hold in place.

(3) Fiberglass T-posts and stays of at least 1-inch in cross-section. Attach to post with loose wire clip or by running through holes in post. Attach stays with tight clips to hold in place.

(4) Wooden posts of black locust, red cedar, osage orange, redwood, pressure treated pine or other wood of equal life and strength may be used. At least one half of the diameter of the red cedar and redwood

posts shall be heartwood. Pressure treatment shall conform to Materials Specifications 585. Wire shall be attached by insulators. See item 6 - Insulation. Line posts shall be at least 3 1/2 inches in diameter at the small end.

(5) Steel posts may be used. They may be "T" or "U" posts that are new, painted or galvanized and a minimum of 1.33 pounds per one foot of length. Charge wire must be attached with insulators. See item 6 - Insulation, for guidance.

(6) Posts for 1 and 2 wire fences shall be long enough to be set at least 18 inches in the ground and extend at least 2 inches above the height of the fence. On sandy loam and more coarse textured soils the posts shall be at least 24 inches in the ground. Posts for 3 or more wire fences shall be set at least 24 inches into the ground.

(7) Spacing of line posts and stays depend on terrain and number of wires. Maximum spacing will be in accordance with Table 1. In undulating terrain, space posts and stays so that fence height is maintained. Posts in dips shall be constructed so that they will not pull out of the soil. Two inch or smaller posts will be anchored or wooden posts (3 1/2 inch) set to sufficient depth to resist pull out.

B. **Offset Brackets**

(1) Offset brackets made of galvanized high tensile spring wire with insulator of high density polyethylene with ultra-violet stabilizer or porcelain can be attached to standard barbed wire fence or net fence to provide transmission line and/or to electrify a standard fence. Place offset brackets no further than 70 feet apart and attach to wires of standard fence next to post. If control of animals is desired, place offset brackets at 2/3 the height of the animals to be controlled. Insure that no wires of the old fence come in contact with the electric fence wire as a short will occur.

4. **Corners and Braces**

A. Braces and end assemblies are required at all corners, gates and angles in the fence line. Single post corner, angle or end brace assemblies or "H" Brace assemblies or an equivalent strength brace will be used. See Attachment A for criteria on corners, angles or brace assemblies.

5. **Energizers**

A. Energizers for permanent electric fencing must be high voltage, low impedance, short pulse that can produce at least 4000 volts output when all fences are charged (on) and under maximum anticipated load. It is strongly recommended that energizer be accompanied with one digital read out voltage meter.

B. Grounding shall be accomplished by attachment to a minimum of 3 feet of ground rod per joule of energizer output capacity. Ground rods shall be 1/2 to 5/8 inch galvanized steel rod or galvanized pipe. Copper rods with copper wire may be used if the energizer terminals are stainless steel. Locate ground rods in a moist, deep soil area. Drive sufficient 6 to 8 feet rods into the ground at least 10 feet apart to provide the required amount of ground rod. Connect a continuous ground wire from the energizer to each rod or pipe with a galvanized steel or aluminum clamp. (Use copper clamp with only copper wire and copper rod.) More gound rods may be needed for system to function properly. (See diagram of Electric Fence, Attachment B.)

C. Lightning arrester shall be installed to protect the energizer from lightning striking the fence. Install an additional set of three 6-foot ground rods and attach to a lightning arrester no closer than 65 feet from the ground rod set at the energizer . Attach the lightning arrester to the wires of the fence. Preferably, install a "lightning choke" in the fence line immediately between the lightning arrester and the energizer. The lightning arrester ground must be better than the energizer ground for it to function properly, because lightning will seek the least resistance route to ground. (See diagram of electric fence, Attachment B.)

D. For protection of energizer, it is recommended that for 120 volt or 240 volt energizers that a voltage spike protector be used. Also, a ground rod should be installed at electric company's transformer pole (primary ground) and another ground rod installed at the electrical circuit breaker box (secondary ground), if they do not exist.

6. **Insulation**

A. Insulation used for positive charged wire(s) must be high density polyethylene with ultra-violet stabilizer or high density polypropylene with ultra-violet stabilizer.

B. All underground wire(s) installations must be double insulated, molded, aluminum or high tensile strength steel 12 1/2 gauge or larger wire. The insulation must be high density polyethylene with ultra-violet stabilizer or high density polypropylene with ultra-violet stabilizer.

C. Insulators for steel and other conductive material posts must be high density polyethylene with ultra-violet stabilizer, high density polypropylene with ultra-violet stabilizer or porcelain, that withstands 10,000 volts or more current leakage.

D. Insulators for end, corner, and angle braces must be high density polyethylene with ultra-violet stabilizer, high density polypropylene with ultra-violet stabilizer or porcelain. Do not use insulated tubing for attaching around post of brace assemblies.

7. **Gates**

A. Electrified gates may be constructed of a single straight wire with a spring loaded insulated handle, or an expandable, coiled, high tensile, 12 1/2 guage wire attached to an insulated handle. The number of wires shall be determined by the fence objective. The gate shall be constructed so that it is non-electrified when the gate is open. Overhead or underground transmission lines will be used to carry electricity past the gate to the remainder of the fence.

8. **Flood Gates**

A. An electrified flood gate may be used in lieu of a non-electrified gate if desired. The electrified flood gate is constructed by stretching an electrified wire across the drainage above high water flow level. Attach droppers of the 12 1/2 gauge high tensile fence wire to the electrified wire at a spacing of 6 inches for sheep and 12 inches for cattle. Hanging wires should be approximately 6 inches above average normal water level. Connect gate to electric fence with double insulated cable through a cut-off switch and flood gate controller. If flooding is expected to last some time, switch the flood gate off. (See Flood Gate drawing, Attachment C.)

II. **Temporary Electric Fence**

1. Temporary electric fence is constructed with the intent of being left in place for only a short time period. It is not constructed as an equivalent of a permanent fence. Therefore, the criteria for an electric fence requires materials, design and construction that will accomplish the intended purpose and

last for the time period planned with no more maintenance than desired.

2. **Number of Wires and Spacing**

The number of wires and spacing will be designed to accomplish the desired result of the fence. See permanent fence guidance for number of wires and spacing. Temporary net fence is available for animals such as sheep, goats and hogs, and for crowding areas.

3. **Materials**

Many companies provide portable fence systems that use such materials as polyethylene wire and tape with steel or aluminum wire woven into them, aluminum wire, plastic and fiberglass post, reels to roll up wire, and portable battery operated energizers that are high voltage, low impedance that can produce sufficient voltage to turn livestock. Temporary fences may be attached to permanent fences to further subdivide pastures. Follow manufacturer's directions for construction, use and operation.

Considerations

1. Training areas should be used to condition livestock to fences. Select a well fenced area and construct an electric fence across or around the area to allow animals to come in contact with the electric fence. Normally, a minimum 12 hours of exposure to the electric fence is required. Most animals will be trained fully in 48 hours. When animals are approaching the fence with caution, they are trained.

Plans and Specifications

Plans and specifications are to be prepared for each specific field site based on this standard. Operation and maintenance requirements will be included.

Operation and Maintenance

Electric fences will be regularly checked to determine the voltage on the fence. If voltage is not sufficient, determine the cause and correct. During dry weather, ground rods may need water applied to soil around them. Maintain proper tension on the fence wires. Clear brush from fence lines to reduce voltage loss. Remove fallen limbs. Overhanging trees and limbs should be trimmed or removed as needed to prevent their falling onto the fence. Electrified flood gates must be maintained. Keep clear of debris. During extended flooding periods, switch the flood gates off.

References: (1) Fences for the Farm and Rural Home, USDA Farmers Bulletin No. 2247, (2)Material Specification 591, (3) Information Sheet NC-ECS-124.

Table 1. Spacing of Fence Posts and Stays Relative to the Number of Line Wires

High-tensil Electric Fences, Erected in Straight Lines Over Level Terrain			
Number of Line Wires	Maximum Spacing of Primary Line Posts		Maximum Stay Distance
	Without Stays	With Stays	
1	100'	--	--
2	50'	100'	50'
3	50'	100'	50'
4	50'	100'	50'
5	50'	100'	50'
6	33'4"	100'	33'4"

Single Post End Brace (Slip Brace) Assembly

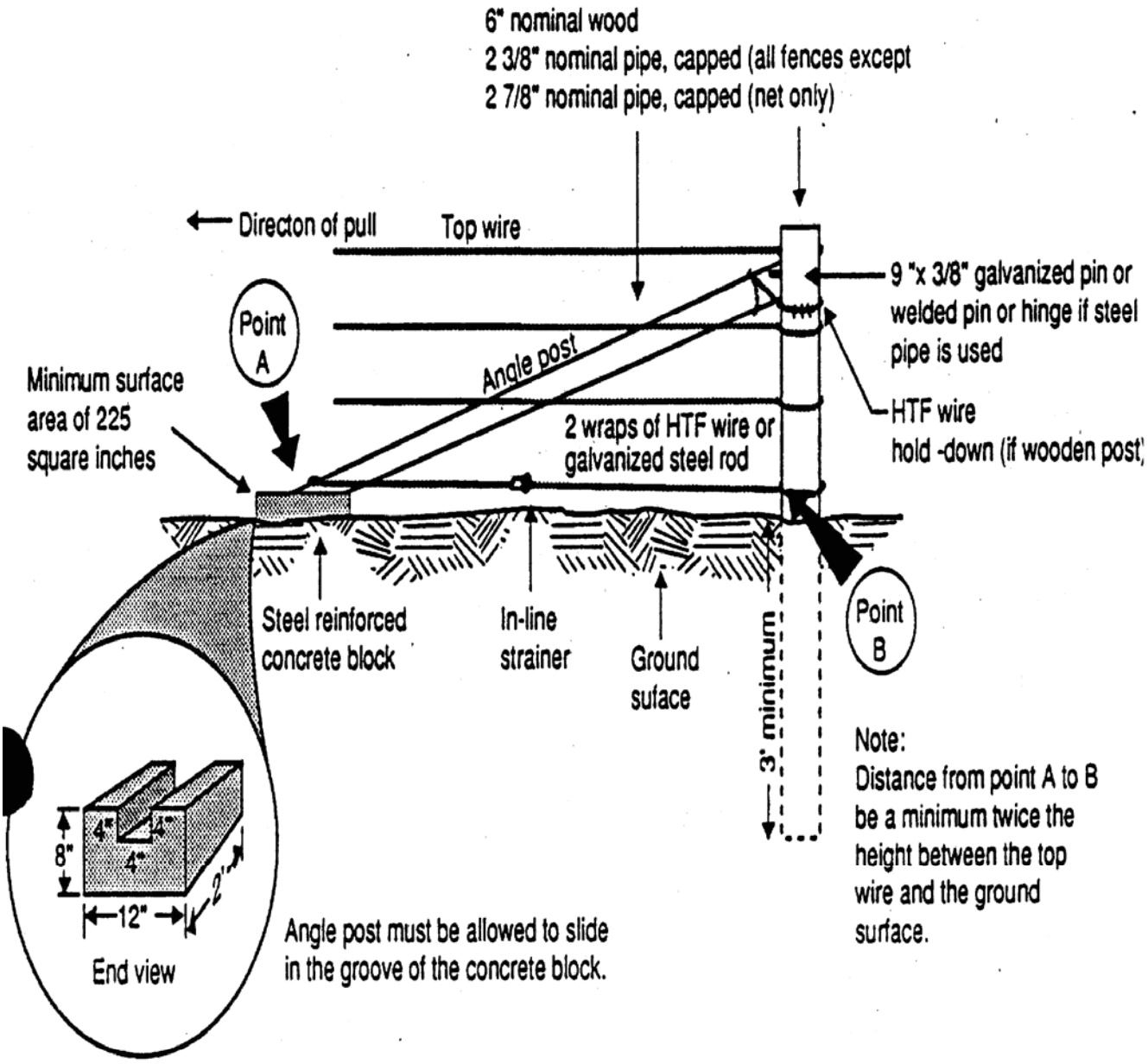

Single Post Corner Or Angle Brace Assembly

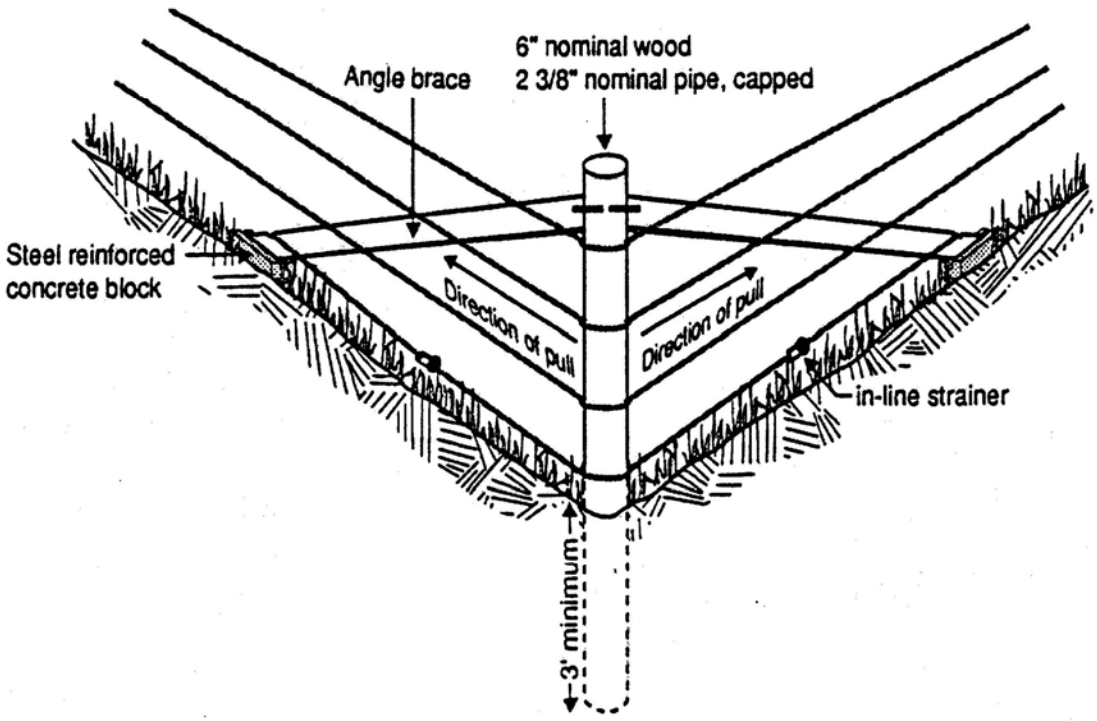

See "Single Post End Brace (Slip Brace) Assembly" for details of construction.

Steel, Welded, Single Post End Brace (Concrete or Driven)

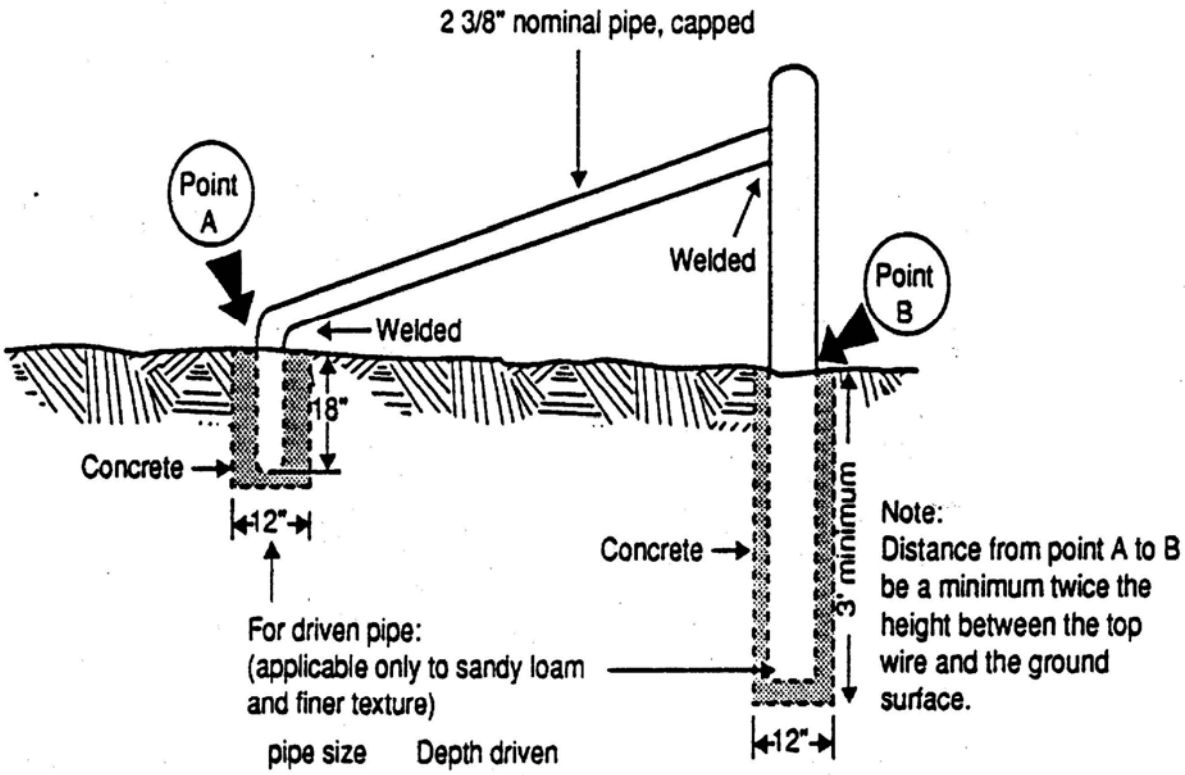

For driven pipe:
(applicable only to sandy loam and finer texture)

pipe size		Depth driven
2 3/8"	–	5'
4"	–	4'
5+"	–	3'

Deadmaned 3-Post Corner

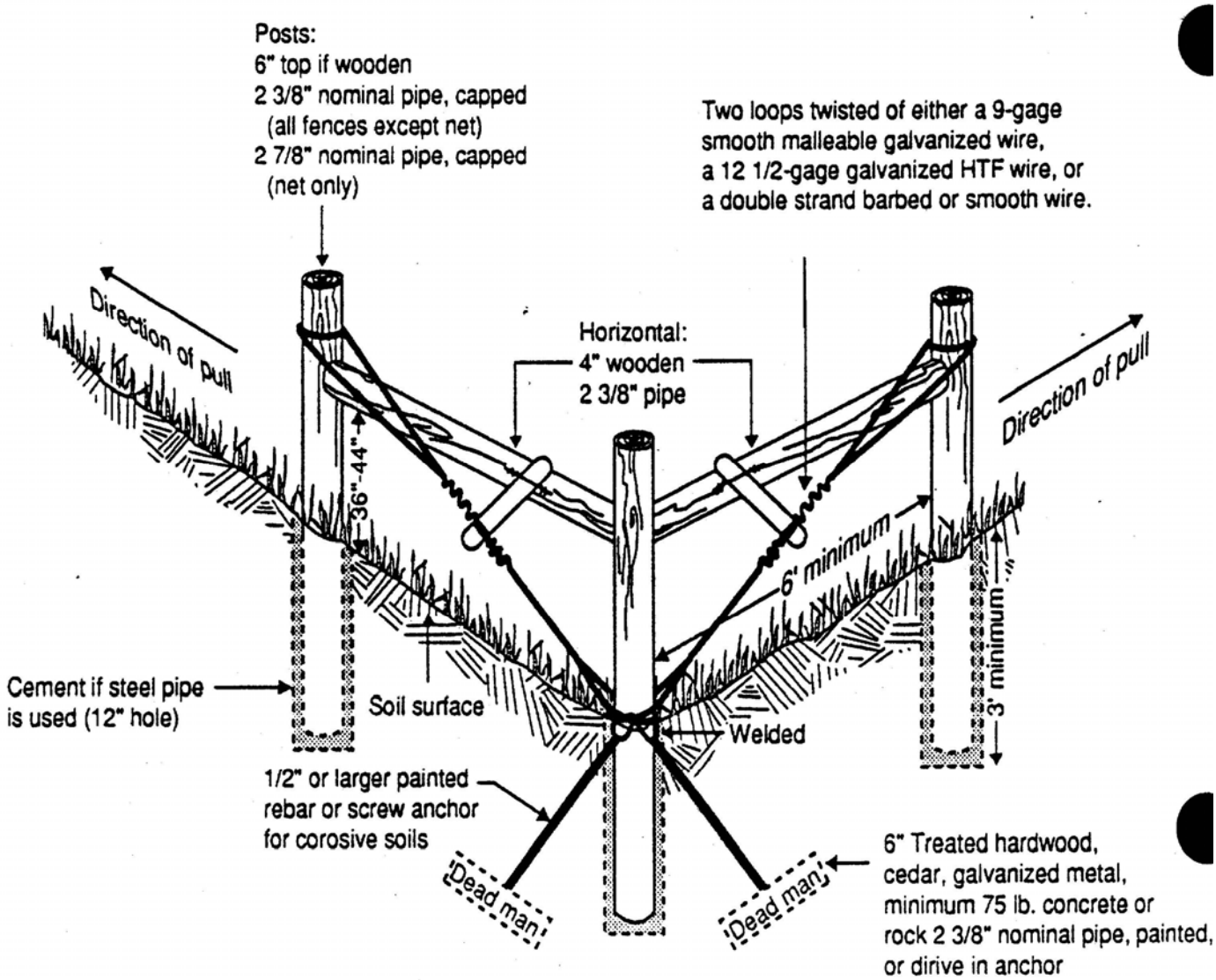

Materials: Post must be new eastern red juniper, blueberry juniper, bois-d'arc, treated pine, treated hardwood, or steel pipe (cemented). Used nominal pipe is acceptable and must be painted.

Splices: Use "western-union splices , figure "8" knots or crimping sleeves for malleable wire.

Use crimping sleeves or figure "8" knot for high tensile strength wire.

2 Post Brace With Deadman

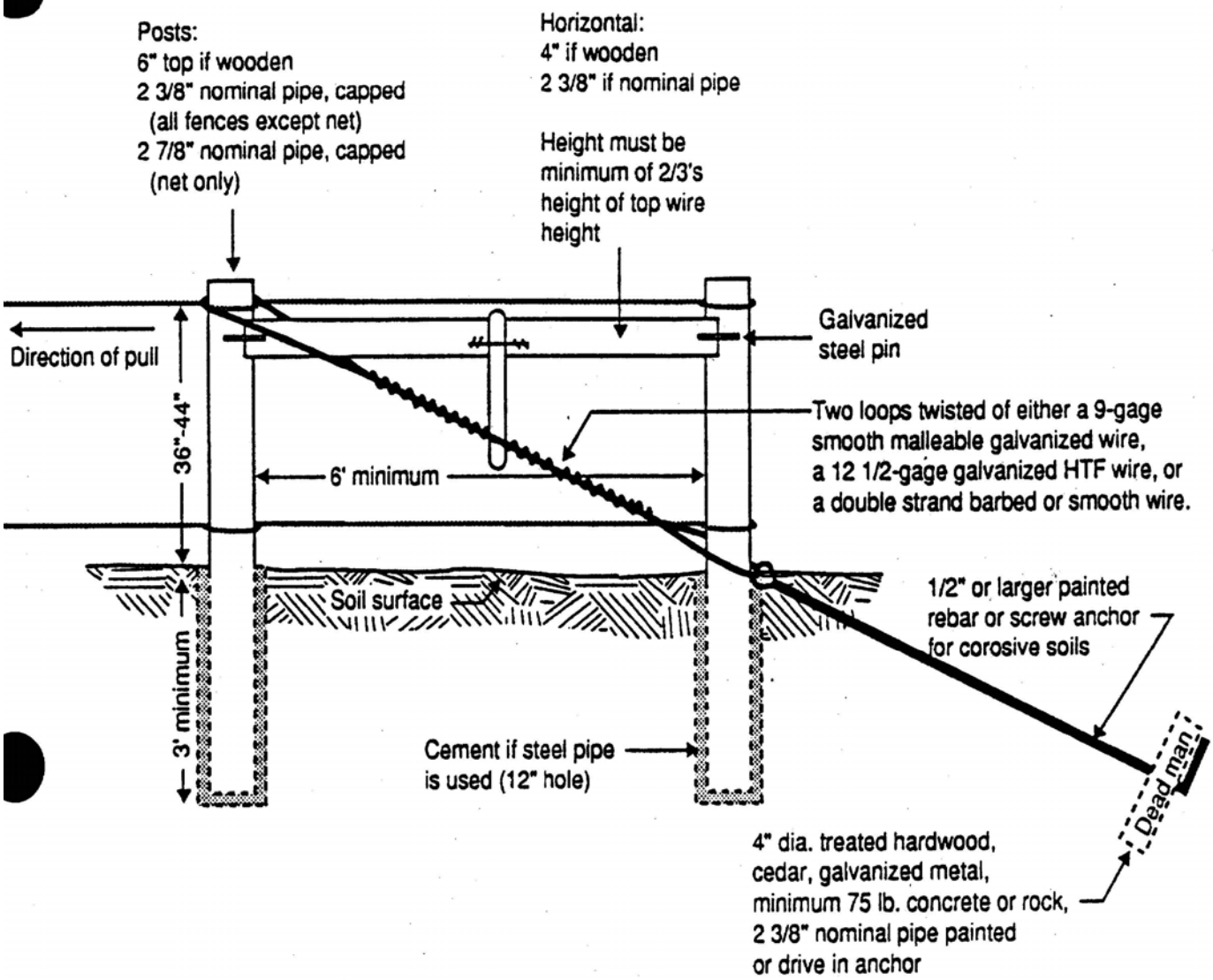

Materials: Post must be new eastern red juniper, blueberry juniper, bois-d'arc, treated pine, treated hardwood, or steel pipe (cemented). Used nominal pipe is acceptable and must be painted.

Splices: Use "western-union splices , figure "8" knots or crimping sleeves for malleable wire.

Use crimping sleeves or figure "8" knot for high tensile strength wire.

Welded Steel 3-Post Diagonal End Brace Assembly

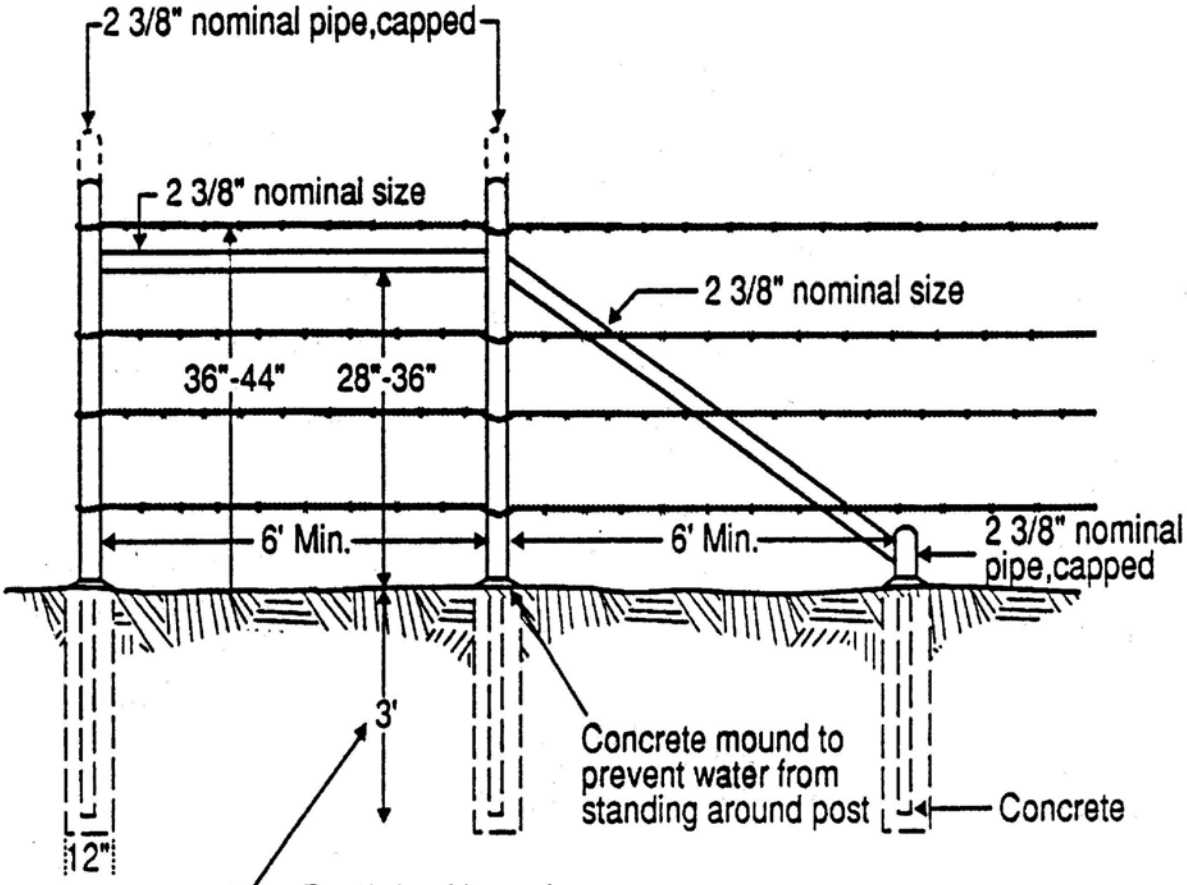

Depth for driven pipe
(Applicable only to sandy loam and finer texture)

Pipe size		Depth driven
2 3/8"	-	5'
4"	-	4'
5+"	-	3'

Pull Assembly

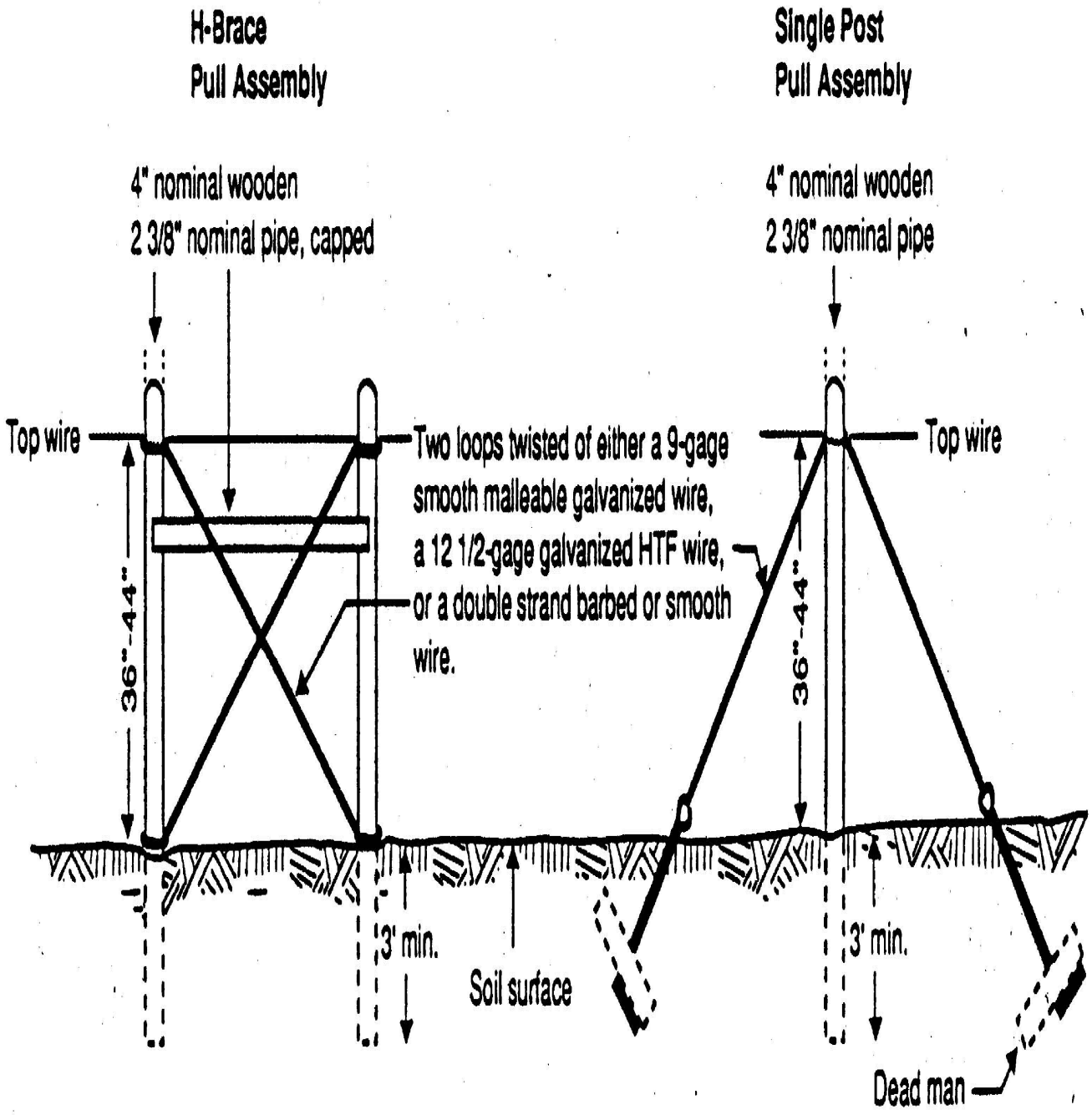

Wooden 3 Post Double "H" Brace End Assembly Without Deadman

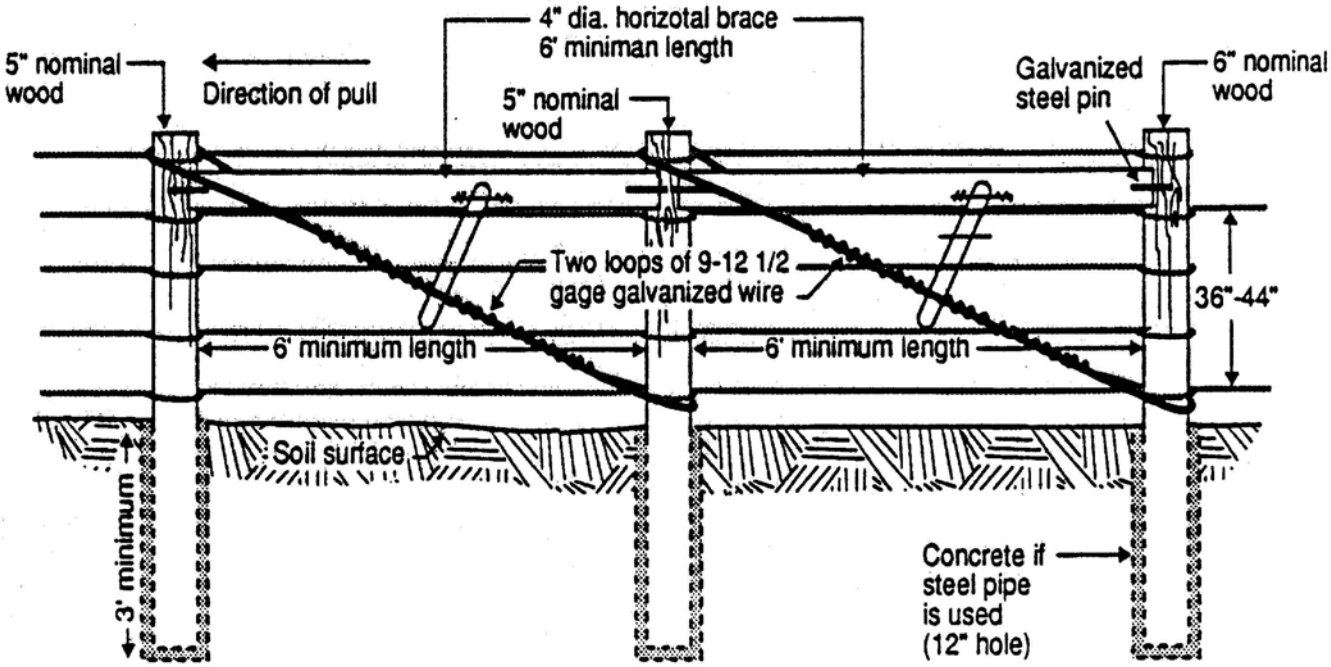

Note: Materials shown above may be substituted using 2 3/8" steel pipe, capped, set in concrete (12 in. diameter hole). Pipe must be painted.

5 Post, H-Brace Corner, Without Deadman

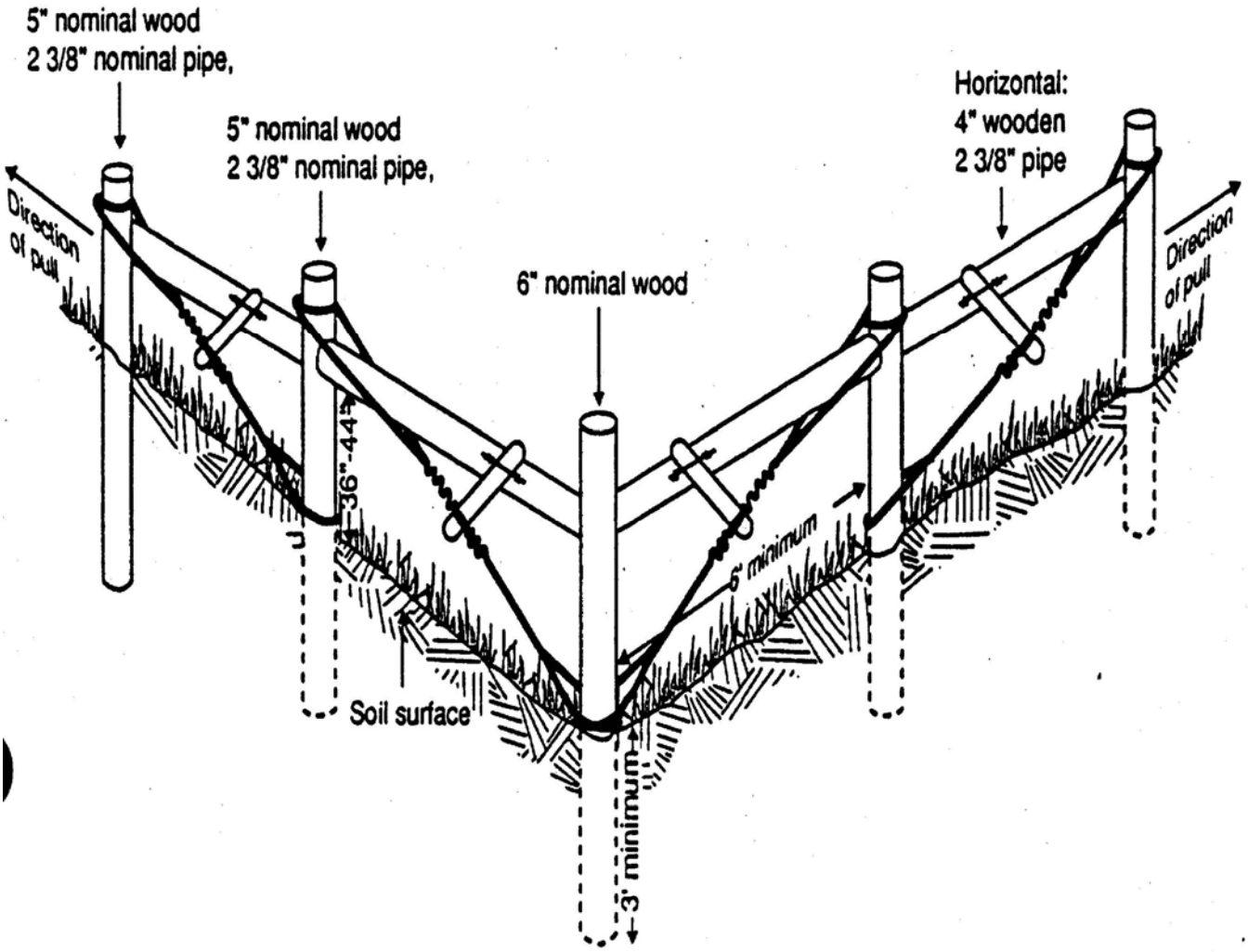

End Brace Assembly Deer Management Fence

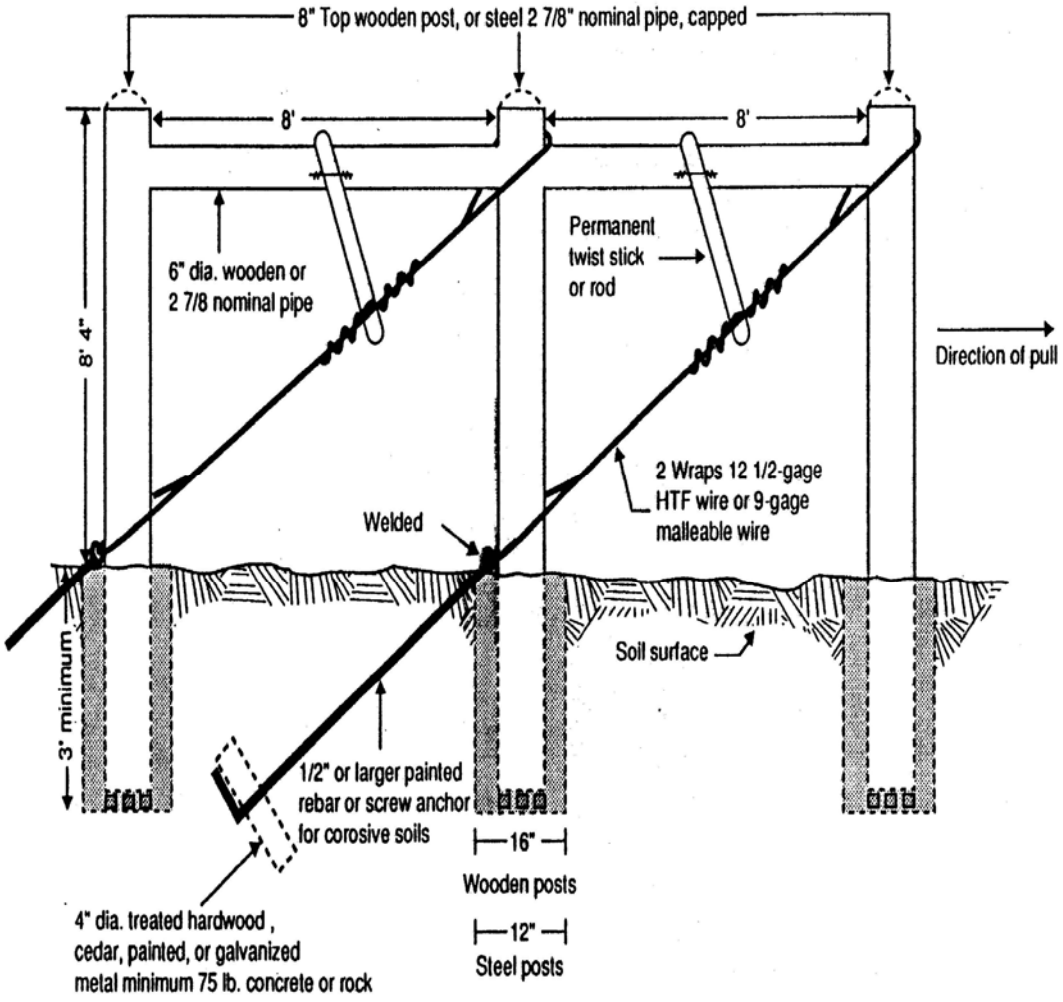

Deadman is optional except where surface layer of soil is more than 20 inches in depth of loamy fine sand or coarser.

Electric Fence

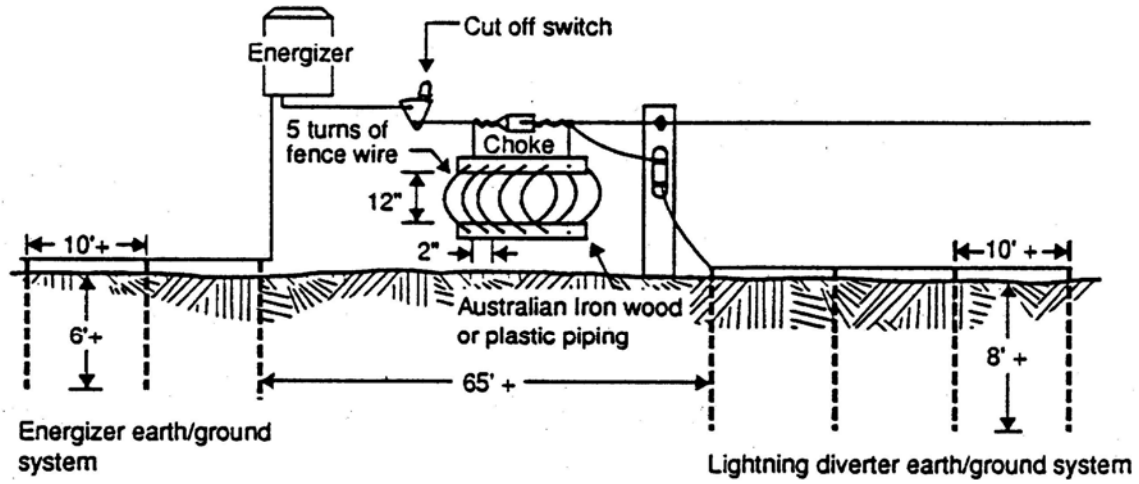

Methods of tying HTS wire

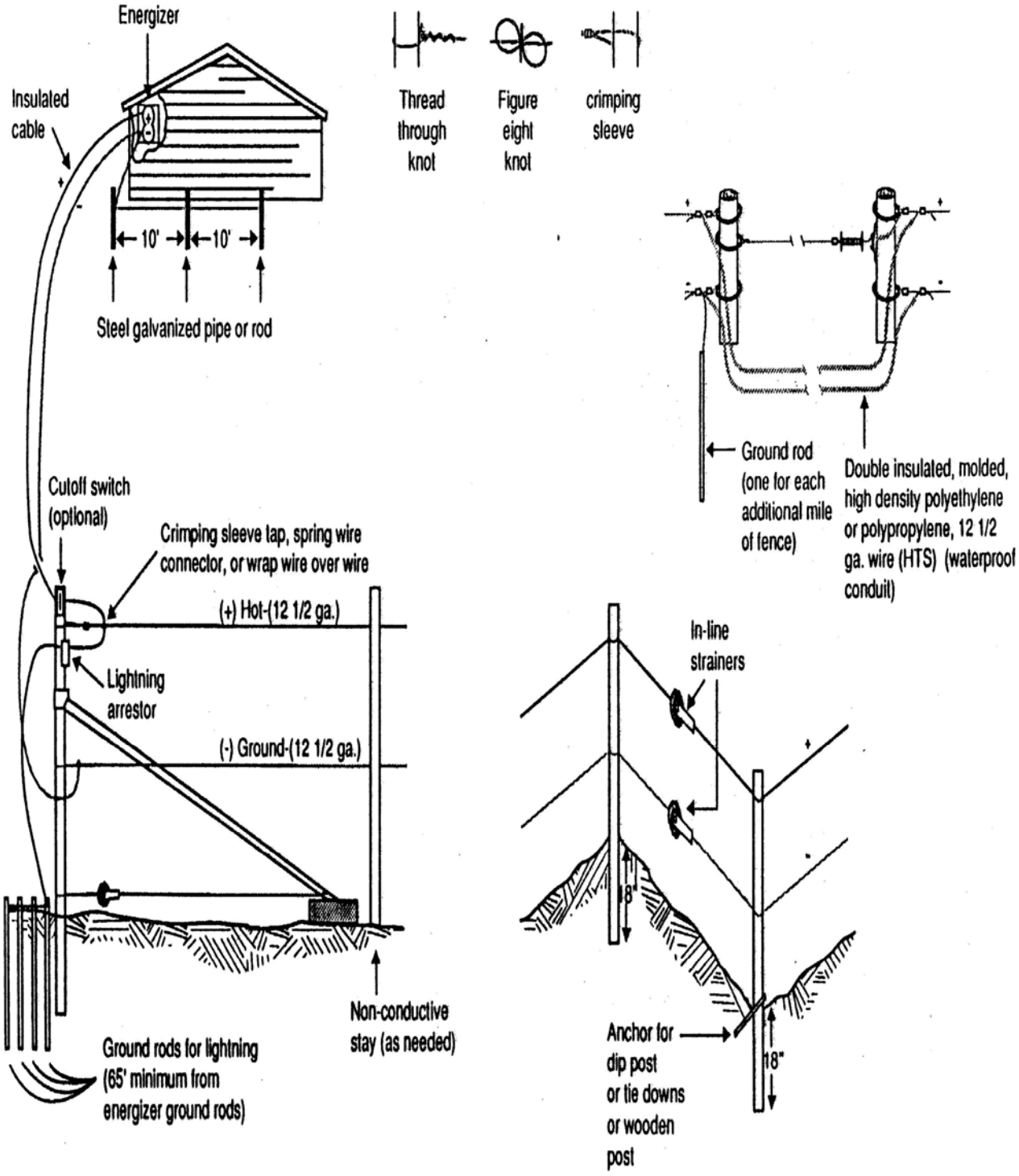
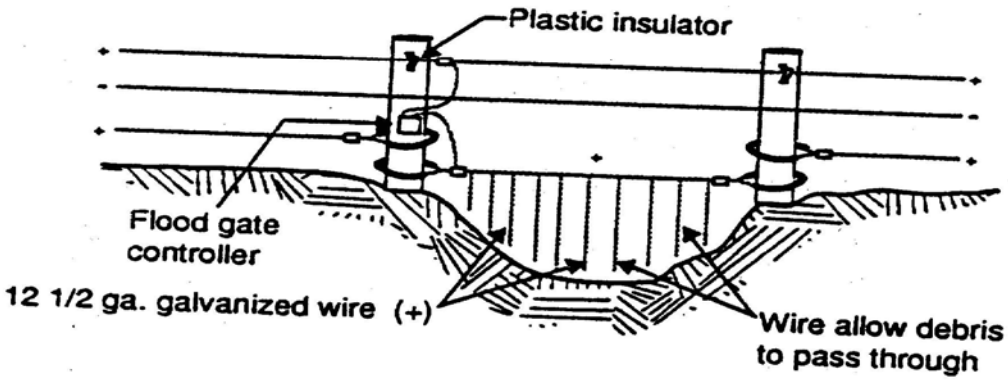
Electric Flood Gate