NATURAL RESOURCES CONSERVATION SERVICE
MONTANA CONSERVATION PRACTICE SPECIFICATION

WINDBREAK/SHELTERBELT ESTABLISHMENT (FEET)

CODE 380

DEFINITION: Windbreaks or shelterbelts are single or multiple rows of trees or shrubs in linear configurations.

SCOPE: This specification provides direction in windbreak/shelterbelt establishment:

- Reduce soil erosion from wind.
- Protect plants from wind related damage.
- Alter the microenvironment for enhancing plant growth.
- Manage snow deposition.
- Provide shelter for structures, animals, and people.
- Enhance wildlife habitat.
- Provide noise screens.
- Provide visual screens.
- Improve air quality by reducing and intercepting air borne particulate matter, chemicals and odors.
- Delineate property and field boundaries.
- Improve irrigation efficiency.
- Increase carbon storage in biomass and soils.

ESTABLISHMENT RECOMMENDATIONS: This practice applies on any areas where linear plantings of woody plants are desired and suited for controlling wind, noise and visual resources.

Slopes greater than 15 percent are generally considered unsuitable for windbreak plantings. Windbreaks/ Shelterbelts can be planted on steeper slopes, but special precautions need to be taken to control water erosion.

General Criteria Applicable To All Purposes Named Above

Species Selection

Species must be suitable and adapted to the soils, climate, site conditions and purpose. See Conservation Tree/Shrub Suitability Group (CTSG) in Section II of the Montana FOTG for a detailed listing of species suited to the soils and environmental factors at the site.

Russian olive (Eleagnus angustifolia) has been identified as an invasive species under certain conditions. It has been found to be invasive in or near riparian and saline areas. Russian olive shall not be planted in or near riparian and saline areas.

Use single or multiple species in a row. Change species where the soil type dictates a change. When choosing multiple species in a row, select species of approximately the same height and similar growth characteristics.

Plantings should have a different species for each row to add diversity to the planting in case of insect and disease concerns occur and for additional wildlife benefits.

Windbreak/Shelterbelt Design

The most effective windbreak planting has five rows of deciduous and evergreen trees and shrubs. The greater the height of the trees within the windbreak, the greater the downwind distance protected.

Arrange rows with one or two rows of shrubs on the windward side and the taller trees in the center. At least one row of evergreens is desirable for maximum year round density and they should occupy a leeward row of the windbreak. Fruit bearing trees and shrubs may be planted to the leeward of the evergreen row (SEE FIGURE 1).

FIGURE1. The most effective windbreak planting has five (or more) rows of deciduous and evergreen trees/shrubs.

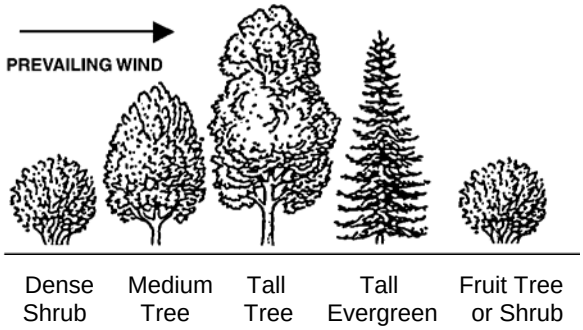

Do not plant slow growing species between two rows of fast growing trees.

Windbreak design density will vary based on the planned function of the barrier. Windbreak density is a function of the number of rows in the planting, the species and spacing used, and the season (leaf on versus leaf off).

Every multiple row planting shall have at least one outside (windward) shrub row.

Provide at least a 12-foot cultivated strip on all sides of the planting to serve as a fireguard, aid in the control of weeds, and reduce the amount of competition for available moisture.

For an L-shaped belt, design wide, round corners to facilitate cultivation and make the planting more effective.

Spacing

The space between rows of tree and shrub rows will be wide enough to accommodate cultivation equipment to control competing vegetation. A minimum spacing is 15 feet. Spacing within row varies with plant type (see Table 1 for spacing requirements).

Where two rows are used as a screen planting, they may be planted as close as four feet apart and treated as one row after the establishment period of two to three years.

TABLE 1. Spacing Requirements

PLANT TYPE	SPACING WITHIN ROW (FEET)	BETWEEN ROW (FEET)
Shrub	3–6	15–24
Tree	6–12	15–24

Site Preparation

Site preparation shall be sufficient for establishment and growth of selected species.

The following will qualify for proper site preparation:

Tillable sites

1. Destroy competing vegetation through cultivation and/or chemical weed control. Sod and alfalfa should be tilled and not just chemically sprayed.

2. Summer fallow area. One year for cropped areas and two years for sod and alfalfa.

3. A fall-sown crop of small grain may be used where needed to control erosion.

Non-tillable sites

1. Destroy competing vegetation through chemical weed control and/or manually removing vegetation. Kill a vegetative area at least three feet in diameter and plant in the center.

Care and Handling for Woody Planting Stock

Planting stock will be stored in a cool, moist environment (33-38° F; 90–95% RH). Keep stock tops dry and free of mold and roots moist and cool. Do not store seedlings in bucket of water during planting or storage. The seedling should be dormant and will not need light. Seedling storage should be limited to a week or less if storage temperatures are higher than 38 degrees F. The seedlings should be left in their shipping package until planting. Upon receiving the seedlings, open the packages and check to see that the roots are moist. Dampen if necessary and reseal the package. Destroy stock that has been allowed to dry, heat up in storage or that has developed mold or other pests.

See Montana Plant Materials Technical Note MT-51 for *Temporary Storage and Handling of Container, Bareroot and Cutting Stock* for more detailed information.

Planting Stock Grade Specifications

Only viable, high quality, and adapted planting stock or seed will be used.

SPECIES	CALIPER 1 INCH ABOVE ROOT COLLAR (INCHES)	HEIGHT RANGE (INCHES)	AGE (YEARS)
Broadleaf	3/16–3/8	12–24	1–3
Evergreen	1/4–1/2	6–12	2–4

Rooted planting stock must not exceed a 2:1 shoot-to-root ratio (SEE FIGURE 2). Container stock shall normally not exceed a one-gallon sized can.

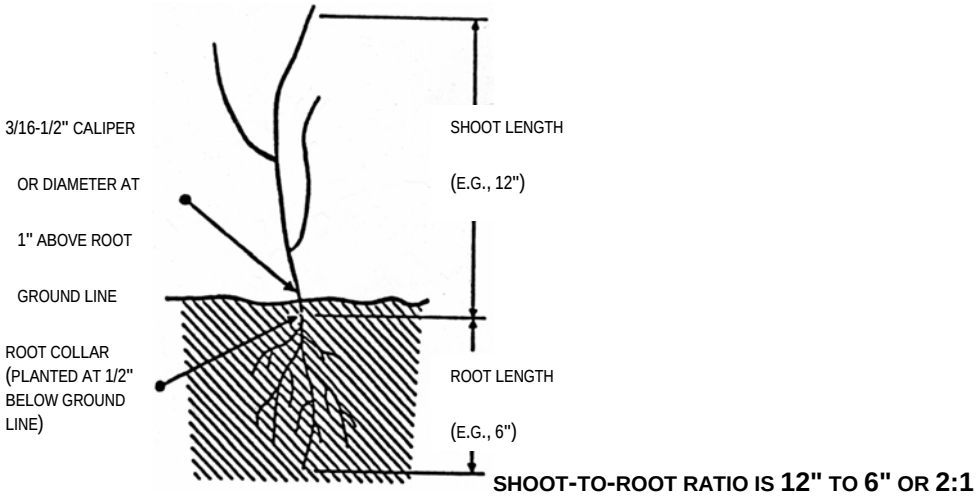

FIGURE 2. PLANT STOCK SHOOT–TO–ROOT RATIO REQUIREMENTS

Planting

Seedlings should be planted immediately after receiving them. Planting shall be done in early spring or late fall with dormant seedlings.

Spring – prior to full extension of new leaves. Typically April 1 to June 1.

Fall – after dormancy sets in (leaf drop). Typically October 15 to November 30.

Plant only when air temperatures are above freezing. Stock shall not be planted when the soil is frozen or dry.

Trees and shrubs may be planted by hand or with a planting machine.

Do not plant on hot, windy days to avoid excessive drying. When the weather is cool, the humidity is high and the winds are light is the time to plant trees. The seedling roots should not be exposed to the air for more than 30 seconds. In mixed plantings of conifer and deciduous seedlings, plant bare root conifers first for they are more susceptible to their roots drying out.

Roots of bareroot stock shall be kept moist during planting operations by placing in water-soil (mud) slurry, peat moss, super-absorbent (e.g., polyacrylamide) slurry or other equivalent material. Rooting medium of container or potted stock shall be kept moist at all times by periodic watering.

Rooted stock will be planted in a vertical position with the root collars approximately 1/2-inch below the soil surface. The planting hole or trench must be deep and wide enough to avoid bending and compacting roots. After planting of rooted stock, pack soil around each plant firmly to eliminate air pockets (SEE FIGURE 3).

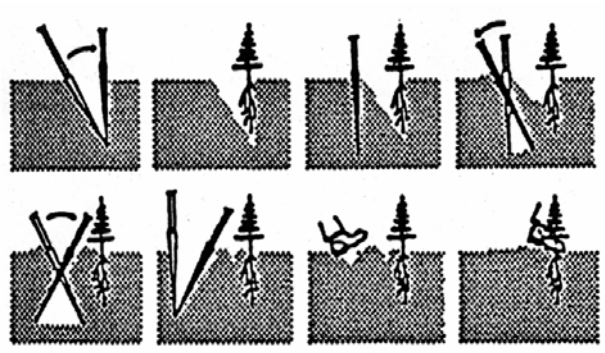

FIGURE 3. PROPER PLANT AND ROOT PLACEMENT OF ROOTED STOCK USING A PLANTING BAR

To allow seedlings to become established, competing vegetation shall be controlled by scalping, cultivation, chemical control, and/or the use of fabric barrier. Remove or kill all competing vegetation for at least a 3-foot wide strip or spot on which the seedlings will be planted.

Protection

The planting will be protected from adverse impacts such as livestock and wildlife damage.

Protect plantings from livestock with fence. Protect plantings from wildlife damage with nets, tubes, baits, traps, repellents, and/or fencing.

Reduce seedling damage from animal browsing and rubbing by the installation of seedling protector tubes. See Montana Plant Materials Technical Note MT-45 for the *Proper Installation, Maintenance, and Removal of Seedling Protector Tubes*. Provide seedling protection until the growing point exceeds the height of the browsing animals on the site (approximately two to six years). Prevent tubes from falling over or being knocked over by securely staking tube. Seedling protection is mainly for broadleaf species.

An alternative to seedling protector tubes is to use fencing around windbreak/shelterbelt planting. Refer to Field Office Technical Guide (FOTG), Section IV – practice standard and specification for Fencing (Code 382) for guidelines on wildlife fencing.

On hot, dry south and west aspects, protect conifers with shingles or burlap shades for the first two growing seasons. To protect conifers from winter desiccation, place shingles or burlap shades on the sides the prevailing winds are coming from.

Mulches, Fabric, and Mats

Fabric mulch may be used for weed control and moisture conservation for new plantings on all sites, particularly those with pronounced growing season moisture deficits or with competitive vegetation.

Acceptable mulches, fabric, or mat materials must allow for water infiltration and air movement. Fabric mats will be a minimum of three feet by three feet in size and properly secured. Rodent damage may occur if they are not properly secured.

The minimum fabric mulch specifications for weed control on new tree plantings:

Woven Polypropylene Fabric:

Ultra Violet (UV) resistance: 5 year (minimum)
Substrate weight: 3 ounces per square yard (minimum)
Mullen Burst Strength: 325 pounds per square inch (minimum)
Thickness: 15 mils (15/1,000 inch) (minimum)
Must be permeable to water.

When organic mulches are used, the material shall be placed a minimum of four inches deep and in at least a three-foot wide diameter around the seedling. Organic mulches should be kept at least six inches away from the main stem of trees and shrubs to minimize possible rodent damage.

Trickle Irrigation

Established plantings should receive sufficient water to fill the soil profile to a depth of six feet where soils permit. Infrequent deep irrigation will help control weeds and provide deep rooting for future dryland survival.

General irrigation should cease around August 15 to permit trees to harden off before frost. On sandy or gravelly soils, the shutoff date can be later. But after trees/shrubs have hardened off, a late fall supplemental application of irrigation water, just before soil freezing is very beneficial to trees if the soil is very dry. This is especially true for evergreens.

Additional Criteria for Twin Row-High Density Designs

Twin row-high density plantings may be used as an alternative design in appropriate settings. This design will consist of two closely spaced rows (four to six feet) using the same species in each set of paired rows. Row plantings should be staggered for maximum density.

The use of multiple twin rows can be very effective in reducing snow loading. Spacing between sets of twin rows can vary from 25 to 50 feet to achieve the desired objective.

Provide at least a 12-foot cultivated strip on all sides of the plantings to control vegetation and reduce competition for moisture.

Additional Criteria to Reduce Wind Erosion and Protect Growing Plants

The interval between windbreaks shall be determined using current, approved, wind erosion technology. Interval widths shall not exceed that permitted by the soil loss Tolerance (T), or other planned soil loss objective. Calculations shall account for the effects of other practices in the conservation management system.

Sites, fields, and plants are protected from wind erosion within an area ten times the design Height (H) on the leeward side and two times the design Height (H) on the windward side of the windbreak.

The density for a field windbreak should be 40-60 percent. This would be equivalent to a single row of conifer and a single row of deciduous.

Additional Criteria to Manage Snow Deposition

For snow distribution across a field, the windbreak density (during expected snow-producing months) shall not be less than 25 percent or greater than 50 percent (roughly the equivalent to single row of deciduous trees). The interval between barriers will not exceed 20H.

For snow accumulation, the minimum barrier density, during expected snow-producing months, will be 50 percent and the leeward row will be at least 100 feet from the area to be protected.

For state, county, or township roads the windward row of plantings will be a minimum of 200 feet from the centerline of the road.

Select tree/shrubs that are less susceptible to snow breakage, such as species with more limber branches. For example: lilacs (limber branches) vs. skunkbush sumac (stiff branches).

A snow trap of one or more dense shrub rows planting can be used to catch and deposit snow before it enters the shelterbelt or living snow fence. This planting should be approximately 100 feet windward and parallel to the primary planting.

Additional Criteria for Living Snow Fence

A minimum of three rows is needed to provide the minimum barrier density of 50 percent.

A typical design utilizes three rows: row one, the windward row should be a deciduous shrub, the second row should contain a deciduous tree and the third row should contain an evergreen tree or shrub.

Living snow fences should be oriented parallel to the road and at right angles to the prevailing snow moving winds or as close as possible.

The windward row of plantings will be a minimum of 200 feet from the centerline of the road. Where the protected road sections are contained in deep cuts, the leeward row should be a minimum of 200 feet from the top of the cut. On four lane highways, use centerline of closest lane.

Extend both ends of the barrier at least 100 feet beyond the area to be protected.

Consult with officials and secure their approval when working near public roads. Make sure plantings do not obscure a drivers' vision of road intersections or curves.

Additional Criteria to Provide Shelter for Structures, Animals and People

For wind protection, the minimum barrier density will be 65 percent during the months of most troublesome wind and the area to be protected will fall within a leeward distance of 10H.

Three rows of plantings–with a least one row being a conifer–are required to provide the minimum 65 percent density and the space required to store drifted snow in the windbreak.

Reduce the number of rows required for adequate protection by one if:

1) A snow trap of one or more rows of shrubs planted 100 feet windward and parallel to the primary planting; or

2) A field windbreak is located less than 660 feet windward and parallel to the primary planting.

Locate the windbreak so there will be a minimum of 100 feet between any building and the nearest row of woody plants.

For the most effective protection, plan windbreaks for at least two sides of the farmstead or feedlot. Extend the planting at least 100 feet beyond the main buildings or feedlots to control wind around the ends. The plantings should be long enough to provide protection of the whole area of farmstead or feedlot.

The openings for access lanes through windbreaks should be diagonal with the rows and at an angle to troublesome winds to prevent wind and snow from funneling into the farmyard.

Access roads next to the outside of the shelterbelt need to be at least 100 feet from the windward row of the windbreak/shelterbelt. This is to protect the road from being drifted in by trapped snow as a result of the windbreak/shelterbelt.

Consider including a drainage ditch for melting snow or rainfall on the leeward side of a livestock/feedlot shelter. This drainage ditch is between the shelter and the feedlot. The intent is to catch and drain any flow away before it has the capabilities of carrying any livestock waste offsite.

Specification MT380-8

Additional Criteria for Noise Screens

Noise screens shall be at least 65 percent dense during all times of the year, as tall as, and as close to the noise source as practicable.

The length of the noise screen shall be twice as long as the distance from the noise source to the receiver.

For high-speed traffic noise, the barrier shall not be less than 65 feet wide. For moderate speed traffic noise, the barrier width shall not be less than 20 feet wide.

Additional Criteria for Visual Screens

Visual screens shall be located as close to the observer as possible with a density, height and width to sufficiently block the view between the area of concern and the sensitive area.

Plantings for the purpose of screening will be of one or more rows. Limitations with respect to proximity with roads and buildings will also apply to screen plantings. Adequate space should be left for cultivation.

Consult with officials and secure their approval when working near public roads. Make sure plantings do not obscure a driver's vision of road intersections or curves.

Additional Criteria for Improving Air Quality by Reducing Particulate Matter Generation

The windbreak interval shall be less than or equal to 10H depending on site conditions and related supporting conservation practices.

Windbreak density on the upwind site density shall be greater than 50 percent to reduce the air flow from source area.

Windbreak density adjacent to the particulate source shall be greater than 65 percent to intercept particulates.

Additional Criteria for Improving Air Quality by Reducing Odor Movement and/or Chemical Drift

Vegetation shall be maintained to control odor movement and chemical drift. Orientation of the shelterbelt shall be perpendicular to the predominant wind direction, and between the source area and the area sensitive to the source.

Locate shelterbelts upwind and downwind of the protected area to disrupt and reduce air flow around the protected area. Shelterbelts for this purpose should be extensive enough to account for wind direction changes at critical times.

Maintain a 60 percent or greater density to insure adequate interception of drifting particles and odors.

Select and maintain tree and shrub species with foliar and structural characteristics to optimize interception, adsorption and absorption of airborne chemicals or odors. Species selections should be compatible with pesticides to be used.

Additional Criteria for Increasing Carbon Storage in Biomass and Soils

Maximize width and length of the windbreak to fit the site.

For optimal carbon sequestration, select plants that have higher rates of sequestration in biomass and soils and are adapted to the site to assure strong health and vigor. Plant the appropriate stocking rate for the site.

Additional Criteria for Providing or Enhancing Wildlife Habitat or Travel Corridors

To enhance the wildlife value of plantings, plant two or more rows of shrubs or conifers on the leeward side of multi-row plantings. Include fruit and berry producing shrubs where possible.

In multiple row plantings, containing more than three rows, the leeward rows may be planted in-groups or segments containing five or more plants of one species to enhance wildlife values. The greater the species diversity the better the windbreak/ shelterbelt is for wildlife.

Use curve-linear rows or plant on the contour.

Plant a very narrow (two to four feet) band of small grain or herbaceous cover between rows in alternate years.

Consider snow accumulation hazards in windbreak design for wildlife.

Additional Criteria to Improve Aesthetics

Plantings along farmstead entrance lanes shall be at least 100 feet from centerline of the lane and the nearest row of woody plants.

Use tree and shrub species with attractive form, foliage color, and flowers. Include conifers and other colorful species in the planting.

OPERATION AND MAINTENANCE: The following actions shall be carried out to insure that this practice functions as intended throughout its expected life. These actions include normal repetitive activities in the application and use of the practice (operation), and repair and upkeep of the practice (maintenance):

- Replacement of dead trees or shrubs will be continued until the practice is functional.
- Plants that have failed to grow shall be replaced not later than the second year. Void spaces are difficult to fill after the planting is over two years old. Gaps in the tree or shrub rows seriously reduce effectiveness and appearance of the planting.
- Controlling competing vegetation is needed to maintain the establishment, health, and vigor of the plantings. Vegetative competition control is needed for the life of established windbreak/shelterbelt.
- Between the rows, cultivate down to 2-4 inch depth. It shall be timely and frequent enough to keep the planting reasonably free from vegetative competition.
- Within the rows, cultivate no deeper than three inches and no closer than two feet from the base of the plant. The optimum time to perform this activity is several times throughout the growing season.
- Some hand hoeing in the rows is desirable to remove weeds near the trees for at least three years after planting.
- Use caution in the application of chemical weed sprays in the vicinity of woody plantings. Strict adherence to label recommendations is essential to avoid damage to plantings.
- Mulches, fabrics, and tree mats will reduce the amount of maintenance needed to keep the planting growing and to control vegetative competition. Periodically inspect woven fabric opening to ensure tree girdling is not occurring.

OPERATION AND MAINTENANCE CONTINUED**:**

- On sandy textured soils that will blow if left exposed, a cover crop, 2-4 feet wide, maybe left or planted between the rows to control soil blowing.
- Provide at least a 12-foot cultivated strip on all sides of the planting to control vegetative competition.
- Thin the barrier to maintain its function.
- Prune to eliminate weak or infected branches and repair injured trees.
- Damaging pests will be monitored and controlled.
- Maintaining the planting in a vigorous growing condition will aid in control of damaging pests. Early detection and application of control measures can often prevent extensive damage.
- Control deer and rodent damage by using fencing, repellents, or poisoning.
- Inspect plantings frequently for signs of animal damage and adjust protection accordingly.
- Replace or re-stake any protector tube that has been damaged, fallen or been knocked over.
- Periodic applications of nutrients may be needed to maintain plant vigor.
- Protect plantings from fire by clean cultivation or the use of vegetative fire breaks.
- Supplemental watering may be desirable to ensure adequate survival.
- Replanting will be required when survival is inadequate.

SURVIVAL PERCENTAGES:

Planting dates, care in planting of the seed or seedlings and controlling competing vegetation will ensure that planted materials have an acceptable rate of survival.

For a successful tree or shrub planting, it is required that 85 percent of all trees or shrubs planted survive after “leaf out” during spring or summer of the second year with no two adjacent plants missing.