NATURAL RESOURCES CONSERVATION SERVICE
MONTANA CONSERVATION PRACTICE SPECIFICATION

RIPARIAN FOREST BUFFER (ACRE)

CODE 391

GENERAL SPECIFICATIONS: Procedures, technical details, and other information listed below provide additional guidance for carrying out selected components of the named practice. This material is referenced from the conservation practice standard for the named practice and supplements the requirements and considerations listed therein.

SPECIES SELECTION AND PLANT LIST: Select species and types appropriate for the planting site and native to Montana and the site. Inventory the proposed planting site, or a comparable site within close proximity, for existing woody species and growing conditions (micro eco-sites, elevation, etc.). On-site observation is the best method to assist in the species selection process. When possible, plant the same species in locations and micro eco-sites in which they are normally found.

Refer to the *Classification and Management of Montana's Riparian and Wetland Sites* publication when the species that might be desirable but are no longer present on the site and possibly should be. Table 1. Plant List, of the Montana Riparian Forest Buffer (Code 391) practice specification lists trees and shrubs commonly associated with and suited to riparian areas. Key attributes are listed for each plant to assist with the design process for establishing new buffers.

A portion of the selected species should be those with a high probability of suckering, rhizomatous and/or spreading (see Table A).

Table A. Riparian Species with Suckering, Rhizomatous or Spreading Root System

COMMON NAME	SCIENTIFIC NAME
Boxelder	Acer negundo
Thinleaf alder	Alnus incana spp. Tenuifolia
Water birch	Betula occidentalis
Black/Douglas hawthorn	Crataegus douglasii
Silverberry	Elaeagnus commutate
Shrubby cinquefoil	Pentaphylloides floribunda
Mockorange	Philadelphus lewisii
Quaking aspen	Populus tremuloides
Common chokecherry	Prunus virginiana
Skunkbush sumac	Rhus trilobata
Golden current	Ribes aureum
Wood's rose	Rosa woodsii
Blue elderberry	Sambucus coerulea
Silver buffaloberry	Shepherdia argentea
Common snowberry	Symphoricarpos albus

Specification MT391-2

SOURCE OF PLANT MATERIALS: Use high quality and adapted planting stock. Trees and shrubs may be procured from local commercial, state or conservation nurseries as bareroot or containerized stock. When using bareroot and containerized stock from commercial sources, select species and stock sources compatible with the planting site.

PLANT SPACING: Initial plant-to-plant spacing for trees and shrubs will depend on their potential height at 20 years of age. Heights may be estimated based on:

1) Performance of the individual species--or comparable species--in nearby areas on similar sites, or

2) Pre-determined and documented heights using Conservation Tree/Shrub Suitability Groups, Section II of the Field Office Technical Guide.

Plant spacing or density specifications are:

PLANT TYPES	HEIGHT (FEET)	PLANT-TO-PLANT SPACING (FEET)	NUMBER OF PLANTS PER ACRE
Shrubs	<10	3–6	4,840–1,210
Shrubs/Trees	10–25	6–10	1,210–436
Trees	>25	10–15	436–194

ESTIMATING PLANTING STOCK:

- To determine the plantable area, deduct from the total buffer area those areas already stocked, anticipated to regenerate naturally, and those areas desired to be non-stocked.

- Determine the percent composition (ratio of plants or canopy cover based on mature crown width) of each species in the planting.

- To determine the actual number of plants by species apportion the plantable area for each species based on its percent composition, then divide by the area of its plant spacing or mature canopy.

Most buffers do not require planting 100 percent of the area or a 100 percent canopy cover. Consider using Montana Forestry Technical Note MT-21 *Estimating Planting Stock for Woody Plantings* dated March 2002 to estimate planting stock for woody plantings. The technical note is a spreadsheet that provides an efficient means of calculating the amount of plant materials needed for area plantings.

PLANTING STOCK GRADE SPECIFICATIONS: Only viable, high quality and adapted planting stock will be used.

SPECIES	CALIPER 1 INCH ABOVE ROOT COLLAR (INCHES)	HEIGHT RANGE (INCHES)	AGE (YEARS)
Broadleaf	3/16–3/8	12–24	1–3
Evergreen	1/4–1/2	6–12	2–4

Rooted planting stock must not exceed a 2:1 shoot-to-root ratio (see FIGURE 1). Container stock shall normally not exceed a 1-gallon sized can.

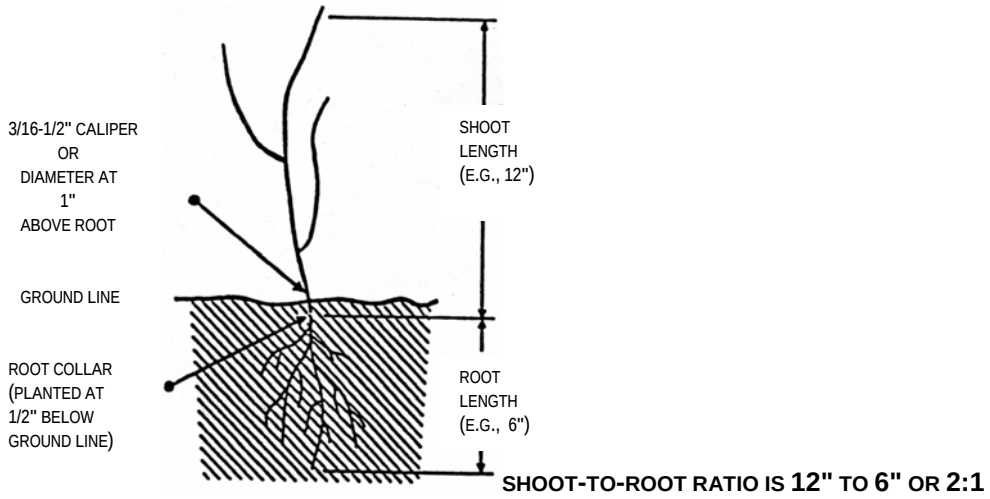

FIGURE 1. PLANT STOCK SHOOT–TO–ROOT RATIO REQUIREMENTS

For cuttings: 1) avoid using material less than 1/2-inch in diameter at the small end; 2) use two to three year old wood; 3) cut off tops with apical buds: 4) remove side branches; and, 5) produce lengths long enough to reach adequate soil moisture required by the individual species during the growing season. Plant cuttings into the lowest water table depth.

See Montana Forestry Technical Note MT-25 on *Improving the Establishment of Willow Cuttings in Riparian Areas* for more detailed information.

CARE AND HANDLING FOR WOODY PLANTING STOCK: Planting stock will be stored in a cool, moist environment (33-38° F; 90–95% RH). Keep stock tops dry and free of mold and roots moist and cool. Do not store seedlings in bucket of water during planting or storage. The seedling should be dormant and will not need light. Seedling storage should be limited to a week or less if storage temperatures are higher than 38 degrees F. The seedlings should be left in their shipping package until planting. Upon receiving the seedlings, open the packages and check to see that the roots are moist. Dampen if necessary and reseal the package. Destroy stock that has been allowed to dry, heat up in storage or that has developed mold or other pests.

See Montana Plant Materials Technical Note MT-51 for *Temporary Storage and Handling of Container, Bareroot and Cutting Stock* for more detailed information.

Live cuttings that will not be immediately planted shall be promptly placed in controlled storage conditions (33-38° F; 90–95% RH) and protected until planting time. Tops of dormant-season collected cuttings may be dipped into latex paint, paraffin, or sealing wax to prevent desiccation and mark the up-end. Prior to planting, dormant-season cuttings will be soaked in water for 24 to 48 hours to re-hydrate the stems.

PREPARATION OF PLANTING SITE: Planting sites shall be properly prepared based on the conditions listed below. For sites to be tilled, leave a minimum 3-foot untreated strip at the edge of the bank or shoreline.

The following will qualify for proper site preparation:

Tillable sites

1. Destroy competing vegetation through cultivation and/or chemical vegetative control. Sod and alfalfa should be tilled and not just chemically sprayed.

2. Summer fallow area. One year if possible for optimum results. Chemically or mechanically control competing vegetation through this fallow time period.

Specification MT391-4

Non-tillable sites

1. Destroy competing vegetation through chemical vegetative control and/or manually removing vegetation. When manually removing vegetation through scalping it is important in sod to get below root mat and expose the mineral soil. Kill a vegetative area at least 3 feet in diameter and plant in the center.

Competing vegetation will need to be controlled for the first five years. The use of fabric squares, chemical or mechanical control are tools used to control the competing vegetation.

Sites with undesirable noxious weeds (salt cedar) or shrubs (Russian olive) will need to be controlled to facilitate planting of desired stock and prevent re-encroachment of the plant. Suitable methods include hand-cutting and removal, brush hogging, brush-blading, or other equivalent procedure with repeated treatment or use of herbicides to control re-sprouting.

See Montana Plant Materials Technical Note MT-43 for information on the *History, Biology, Ecology, Suppression, and Re-vegetation of Russian-Olive Sites*.

PLANTING TIME:

Spring–prior to full extension of new leaves. Typically April 1 to June 1.

Fall–after dormancy sets in (leaf drop). Typically October 15 to November 30.

PLANTING: Plant woody stock only when air temperatures are above freezing. Stock shall not be planted when the soil is frozen or dry.

Trees and shrubs may be planted by hand or with a planting machine.

Do not plant on hot, windy days to avoid excessive drying. When the weather is cool, the humidity is high and the winds are light is the time to plant trees. The seedling roots should not be exposed to the air for more than 30 seconds. In mixed plantings of conifer and deciduous seedlings, plant bare root conifers first for they are more susceptible to their roots drying out.

Roots of bareroot stock shall be kept moist during planting operations by placing in water-soil (mud) slurry, peat moss, super-absorbent (e.g., polyacrylamide) slurry or other equivalent material. Rooting medium of container or potted stock shall be kept moist at all times by periodic watering.

Rooted stock will be planted in a vertical position with the root collars approximately 1/2-inch below the soil surface. The planting hole or trench must be deep and wide enough to avoid bending and compacting roots. After planting of rooted stock, lightly pack soil around each plant firmly to eliminate air pockets (SEE FIGURE 2).

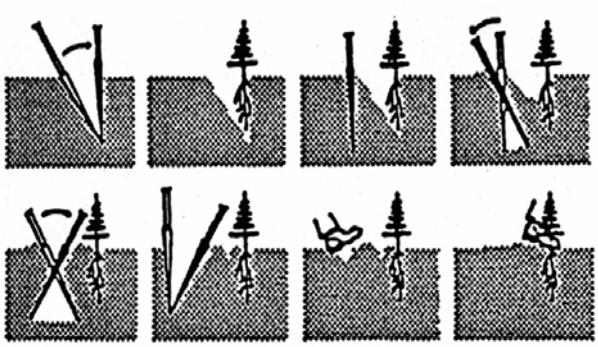

FIGURE 2. PROPER PLANT AND ROOT PLACEMENT OF ROOTED STOCK USING A PLANTING BAR

Random scattered plantings in areas lacking woody vegetation throughout the riparian site would look more natural and are encouraged.

Avoid sites that have had recent application of pesticides harmful to woody species to be planted. If pesticides are used, apply only when needed. Handle and dispose of pesticides properly and within federal, state, and local regulations. Follow label directions and heed all precautions listed on the container.

Some species (i.e., red osier dogwood, water birch) can be collected as clumps on-site and moved to another area where more woody plants are desired. Clumps are usually taken with a backhoe. Dig to 12–15 inches depth to get most of the root mass. Cut back crowns to one-quarter original height. Clump plantings work best in early spring when plants are dormant from April 1 to June 1. Cover root crown with soil slightly below original depth.

FABRIC MULCH: Fabric mulch will be used for weed control and moisture conservation for new plantings on all sites, particularly those with pronounced growing season moisture deficits or with competitive vegetation. Acceptable mulches, fabric, or mat materials must allow for water infiltration and air movement. Fabric mulches will be a minimum of three feet by three feet in size. Place fabric around planted stock. Place a minimum of a 6 inch "x" cut around the stock. Anchor fabric with staples or rock (No Dirt). Rodent damage may occur if they are not properly secured.

The minimum fabric mulch specifications for weed control on new tree plantings are:

Woven Polypropylene fabric

Ultra Violet (UV) resistance: 5 year (minimum)
Substrate weight: 3 ounces per square yard (minimum)
Mullen Burst Strength: 325 pounds per square inch (minimum)
Thickness: 15 mils (15/1,000 inch) (minimum)
Must be permeable to water

When organic mulches are used, the material shall be placed a minimum of four inches deep and in at least a three feet wide diameter around the seedling. Organic mulches should be kept at least six inches away from the main stem of trees and shrubs to minimize possible rodent damage.

SEEDLING PROTECTORS: Reduce seedling damage from animal browsing and rubbing by the installation of seedling protector tubes. Seedling protector tubes protect the plant allowing it to establish a root system. There are two kinds of tubes – solid and mess tubes. Solid tubes are used to help control damage done by mice and voles. Mess tubes are used to protect plant from animal browsing. Seedling protector tubes should be three to four feet in height. See Montana Plant Materials Technical Note MT-45 for the *Proper Installation, Maintenance, and Removal of Seedling Protector Tubes*. Prevent tubes from falling over or being knocked over by securely staking tube (Bamboo generally not effective). Seedling protection is mainly for broadleaf species.

An alternative to seedling protector tubes is to use fencing around clumps of plantings. Provide seedling protection until the growing point exceeds the height of the browsing animals on the site (approximately two to six years). Refer to Field Office Technical Guide, Section IV – Practice Standard and Specification for Montana Fencing (Code 382) for guidelines on wildlife fencing.

MAINTENANCE AND MANAGEMENT: Replant dead plant materials the second and third years after installation. Monitor the site and control competing herbaceous vegetation around new planting. When using fabric mulch, control competing vegetation an additional foot around the fabric mulch by either chemical or mechanical methods. With chemical control, care must be taken to avoid chemical contact with leaf, stem, and bark of planted stock. Inspect plantings frequently for signs of animal damage and adjust protection accordingly.

SURVIVAL PERCENTAGES: For a successful tree or shrub planting, it is required that 75 percent of all trees or shrubs planted survive as inventoried after "leaf out" during spring or summer of the second year.

EXPLANATION OF TERMS–TABLE 1: Species are grouped by plant type and arranged in alphabetical order by common name. Heights are listed for applicable Major Land Resource Areas (MLRA's, USDA Agricultural Handbook 296, December 1981) and precipitation zones. Heights and attributes represent expected performance and characteristics of the individual plant at the reference age in dominant canopy positions on medium-textured, non-saline, neutral pH soils. The reference age for trees is 20 years of age. The reference age for shrubs is ten years.

ATTRIBUTES: Codes include:

H = HIGH, M = MEDIUM, L = LOW,

Y = YES, N = NO,

G = GOOD, F = FAIR, P = POOR.

1. **SOIL TEXTURE.** The plant's ability to grow and compete in various soil textures. G = plants can grow well in this soil texture; F = plants can grow in this soil texture; P = plants grow poorly under these soil conditions.

2. **SOIL SALINE/ALKALINE TOLERANCE.** The plant's ability to grow in saline/alkaline soil conditions. H = plants can withstand and/or grow in strongly saline/alkaline conditions; M = plants can withstand and/or grow in moderately saline/alkaline conditions; L = plants can withstand and/or grow only in slightly saline/alkaline conditions.

3. **INUNDATION TOLERANCE.** General capacity of the plant to withstand standing water, low soil aeration conditions. H = can tolerate five or more days of inundation; M = can tolerate two- to five-day events; L = can tolerate one-day or less of inundation.

4. **SOIL SATURATION TOLERANCE.** The plant's capacity to grow in near or saturated soil conditions. H = plant can withstand *"wet feet"*; M = some tolerance to saturated conditions; L = little or no tolerance of water-saturated soil.

5. **DROUGHT TOLERANCE.** The plant's capacity to grow in drought or dry soil conditions. H = plant can withstand or has physiology to survive droughty periods; M = some tolerance to drought or dry conditions; L = little or no tolerance of dry soil conditions.

6. **SHADE TOLERANCE.** The plant's capacity to grow in a shaded condition. H = can grow in the shade of an overstory; M = can grow in partial shade; L = needs full or nearly full sunlight.

7. **SHADE VALUE.** The density or fullness of shade provided by an individual plant's crown in a full leaf-out condition. H = provides full shade; M = a partially open crown that provides patchy or incomplete shade; L = a very open crown that provides little shade.

8. **AESTHETICS.** A very general rating ("H", "M", or "L") that indicates some aspect of the plant, e.g., flowers, special foliage characteristic, or plant part color, that enhances the appeal or viewing of the planting.

9. **NATIVE SPECIES.** "Y" indicates that plant is native to the state; "N" indicates it is introduced.

10. **SEDIMENT DEPOSITION TOLERANCE.** H = plant can withstand repeated, deep deposits of sediment; M = plant can withstand repeated, shallow deposits of sediment; L = plant can withstand little or no sediment deposits.

TABLE 1. PLANT LIST

COMMON NAME	SCIENTIFIC NAME	10-14" PPZ	15-19" PPZ	20-24" PPZ	24" + PPZ	20-YEAR HEIGHT (FEET)	20-YEAR CROWN WIDTH (FEET)	SALINE/ALKALINE TOLERANCE	INUNDATION TOLERANCE	SOIL SATURATION TOLERANCE	DROUGHT TOLERANCE	SHADE TOLERANCE	SHADE VALUE	AESTHESITICS	NATIVE SPECIES	SEDIMENT DEPOSIT TOLERANCE
TREE (CONIFER)																
Engelman Spruce	*Picea engelmannii*			X	X	15	10	L	H	H	M	M	H	H	Y	H
White Spruce	*Picea glauca*		X	X	X	15	10	L	H	H	M	M	H	H	Y	H
Subalpine Fir	*Abies lasiocarpa*				X	20	9	L	H	H	L	H	H	M	Y	H
Western Redcedar	*Thuja plicata*				X	12	8	M	H	H	L	H	H	H	Y	H
Ponderosa Pine	*Pinus ponderosa*	X	X			17	12	M	M	L	H	L	M	H	Y	L
Douglas Fir	*Pseudotsuga menziesii*	X	X	X		15	10	M	M	M	H	M	M	H	Y	M
Western Larch	*Larix occidentalis*			X	X	17	9	L	L	L	L	L	M	H	Y	L
Grand Fir	*Abies grandis*			X	X	20	10	L	M	H	L	H	H	M	Y	M
Rocky Mountain Juniper	*Juniperus scopulorum*	X	X			12	9	M	M	L	H	M	L	M	Y	M
TREE (DECIDUOUS)																
Plains Cottonwood	*Populus sargentii*	X				45	25	M	H	H	H	L	H	H	Y	H
Black Cottonwood	*Populus trichocarpa*	X	X			45	25	M	H	H	M	L	H	H	Y	H
Narrowleaf Cottonwood	*Populus angustifolia*	X	X			45	25	M	H	H	M	L	H	H	Y	H
Green Ash	*Fraxinus pennsylvanica*	X	X			18	11	M	M	M	H	H	H	H	Y	M
Black Hawthorne	*Crataegus douglasii*		X	X		12	10	L	M	M	M	M	M	M	Y	L
Mountain Maple	*Acer glabrum*			X	X	15	9	L	L	M	L	H	M	H	Y	L
Quaking Aspen	*Populus tremuloides*		X	X	X	25	15	M	M	H	M	L	H	H	Y	M
Water Birch	*Betula occidentalis*			X	X	15	11	L	H	H	L	L	H	H	Y	H
Thinleaved Alder	*Alnus incana*			X	X	15	10	L	H	H	L	M	H	M	Y	H
Boxelder	*Acer negundo*		X			15	15	L	M	M	M	M	M	M	Y	M

CONTINUED TABLE 1. PLANT LIST SHRUBS

TABLE 1. PLANT LIST

COMMON NAME	SCIENTIFIC NAME	10-14" PPZ	15-19" PPZ	20-24" PPZ	24" + PPZ	20-YEAR HEIGHT (FEET)	20-YEAR CROWN WIDTH (FEET)	SALINE/ALKALINE TOLERANCE	INUNDATION TOLERANCE	SOIL SATURATION TOLERANCE	DROUGHT TOLERANCE	SHADE TOLERANCE	SHADE VALUE	AESTHESITICS	NATIVE SPECIES	SEDIMENT DEPOSIT TOLERANCE
SHRUB																
American Plum	*Prunus americana*	X	X	X		10	9	M	M	M	M	L	L	H	Y	H
Native Willows	*Salix* spp.	X	X	X	X	15	13	M	H	H	L	L	M	H	Y	H
Big Sagebrush	*Artemisia tridentata*	X	X	X		4	3	M	L	L	H	L	L	M	Y	M
Blue Elderberry	*Sambucus coerulea*			X	X	6	5	L	H	L	H	H	M	H	Y	M
Skunkbush Sumac	*Rhus trilobata*	X	X	X		8	5	H	L	L	H	L	H	M	Y	L
Common Chokecherry	*Prunus virginiana*	X	X	X	X	10	9	M	H	M	H	M	M	H	Y	M
Redosier Dogwood	*Cornus sericea*			X	X	7	6	M	H	H	H	M	M	M	Y	H
Silver Buffaloberry	*Sherpherdia argentea*	X	X	X	X	10	7	H	H	H	H	L	H	M	Y	M
Common Snowberry	*Symphoricarpos albus*		X	X		3	2	L	H	M	H	M	L	H	Y	M
Wood"s Rose	*Rosa woodsii*		X	X		4	5	M	H	M	H	M	L	M	Y	L
Serviceberry	*Amelanchier alnifolia*		X	X		10	7	L	M	M	L	M	M	H	Y	M
Golden Currant	*Ribes aureum*	X	X	X		4	5	L	M	M	M	M	L	M	Y	L
Silverberry	*Elaeagnus commutata*	X	X	X		6	7	H	H	H	H	L	L	M	Y	H