United States Department of Agriculture
Natural Resources Conservation Service

Ecological Site Description

Site Type: Rangeland

Site Name: Saline Loamy (SnLy), 10-14" P.Z., High Plains Southeast

Site ID: R034AY336WY

Major Land Resource Area: 34A-Cool Central Desertic Basins and Plateaus

Physiographic Features

This site will usually occur in a lowland position, on flat to gently sloping land, but can occur in all positions.

Landform: alluvial fans & stream terraces **Aspect:** N/A

	Minimum	Maximum
Elevation (feet):	5500	7500
Slope (percent):	0	40
Water Table Depth (inches):	none within 60	
Flooding:		
Frequency:	none	none
Duration:	none	none
Ponding:		
Depth (inches):	0	0
Frequency:	none	none
Duration:	none	none
Runoff Class:	negligible	high

Climatic Features

Annual precipitation ranges from 10-14 inches per year. Wide fluctuations may occur in yearly precipitation and result in more dry years than those with more than normal precipitation. Temperatures show a wide range between summer and winter and between daily maximums and minimums. This is predominantly due to the high elevation and dry air, which permits rapid incoming and outgoing radiation. Cold air outbreaks in winter move rapidly from northwest to southeast and account for extreme minimum temperatures. Extreme storms may occur during the winter, but most severely affect ranch operations during late winter and spring.

Daytime winds are generally stronger than nighttime and occasional strong storms may bring brief periods of high winds with gusts to more than 50 mph.

Growth of native cool season plants begins about April 15 and continues to about June 15. Some green up of cool season plants usually occurs in September.

The following information is from the “Laramie” climate station:

	Minimum	Maximum	5 yrs. out of 10 between
Frost-free period (days):	57	149	June 1 – September 16
Freeze-free period (days):	94	183	May 15 – September 28
Annual Precipitation (inches):	5.8	17.34	

Mean annual precipitation: 11.53 inches
Mean annual air temperature: 42.2°F (30.4°F Avg. Min. to 53.9°F Avg. Max.)

For detailed information visit the Natural Resources Conservation Service National Water and Climate Center at http://www.wcc.nrcs.usda.gov/ website. Other climate station(s) representative of this precipitation zone include "Dixon " and "Medicine Bow".

Influencing Water Features

Wetland Description:	System	Subsystem	Class	Sub-class
None	None	None	None	None

Stream Type: None

Representative Soil Features

The soils of this site are moderately deep (greater than 20" to bedrock) to very deep. Permeability is moderately slow to slow due to excess sodium in the substratum. Depth to horizons with excessive amounts of sodium and strongly alkaline reactions ranges from 10 to 20 inches. These horizons restrict deep root penetration by all but alkali tolerant species. These soils are typically calcareous throughout and have salts which, although low at the surface and upper subsoil, increase with depth.

Major Soil Series correlated to this site include:

Parent Material Kind: alluvium
Parent Material Origin: sedimentary rock
Surface Texture: loam, fine sandy loam, sandy clay loam
Surface Texture Modifier: none
Subsurface Texture Group: loam, sandy clay loam, clay loam, silty clay loam
Surface Fragments ≤ 3" (% Cover): 0
Surface Fragments > 3" (%Cover): 0
Subsurface Fragments ≤ 3" (% Volume): 0
Subsurface Fragments > 3" (% Volume): 0

	Minimum	Maximum
Drainage Class:	well drained	well drained
Permeability Class:	moderate	very slow
Depth (inches):	15	>60
Electrical Conductivity (mmhos/cm) ≤20":	0	16
Sodium Absorption Ratio ≤20":	5	40
Soil Reaction (1:1 Water) ≤20":	6.6	9.6
Soil Reaction (0.1M CaCl2) ≤20":	NA	NA
Available Water Capacity (inches) ≤30":	3	4.5
Calcium Carbonate Equivalent (percent) ≤20":	0	15

Plant Communities

Ecological Dynamics of the Site:

As this site deteriorates from improper grazing management, species such as birdfoot sage and unpalatable forbs will increase. Western wheatgrass and needleandthread will decrease in frequency and production.

The Historic Climax Plant Community (description follows the plant community diagram) has been determined by study of rangeland relic areas, or areas protected from excessive disturbance. Trends in plant communities going from heavily grazed areas to lightly grazed areas, seasonal use pastures, and historical accounts have also been used.

The following is a State and Transition Model Diagram that illustrates the common plant communities (states) that can occur on the site and the transitions between these communities. The ecological processes will be discussed in more detail in the plant community narratives following the diagram.

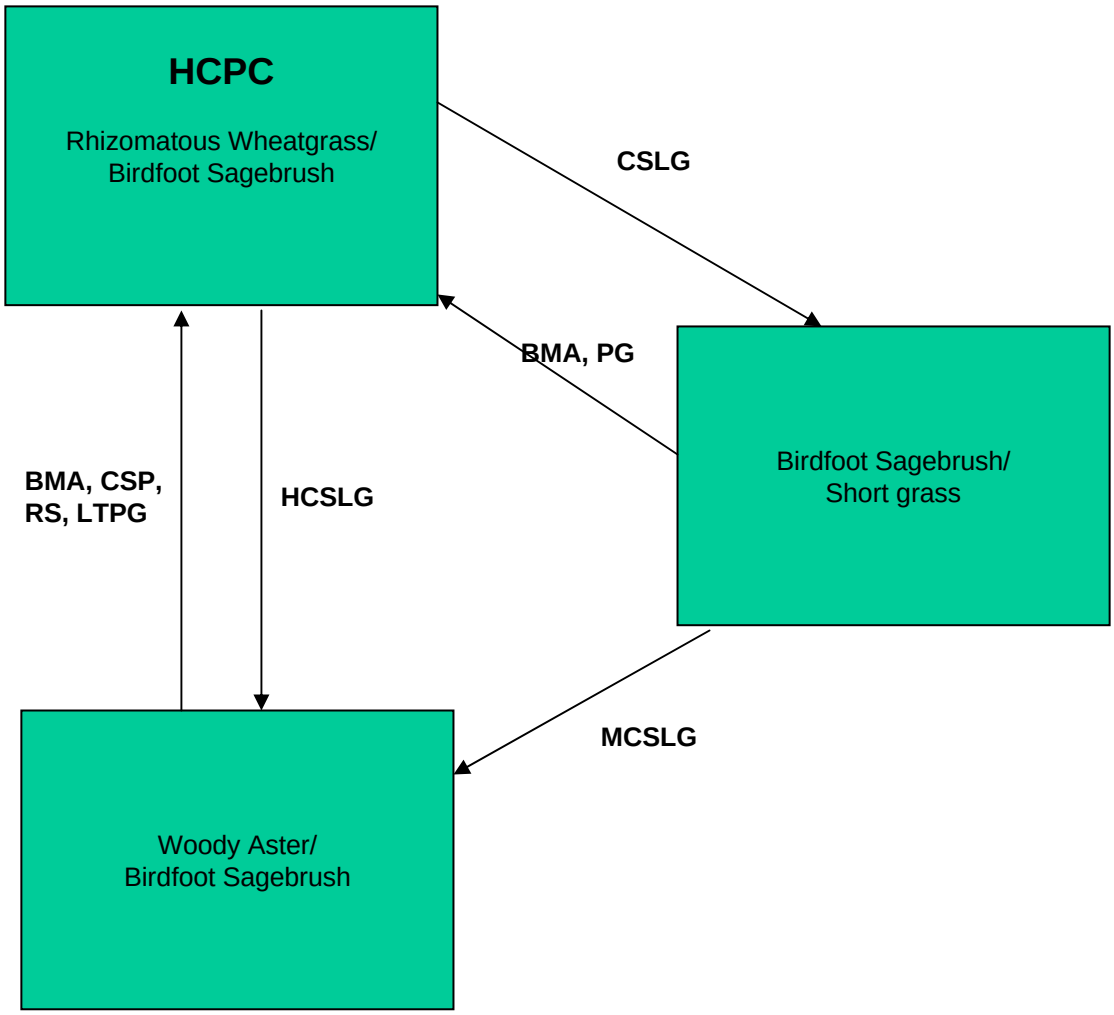

BMA – Brush Management (all methods)
BMC – Brush Management (chemical)
BMF – Brush Management (fire)
BMM – Brush Management (mechanical)
CSP – Chemical Seedbed Preparation
CSLG – Continuous Season-long Grazing
DR – Drainage
CSG – Continuous Spring Grazing
HB – Heavy Browse
HCSLG – Heavy Continuous Season-long Grazing
HI – Heavy Inundation
LPG – Long-term Prescribed Grazing
MT – Mechanical Treatment (chiseling, ripping, pitting)
MCSLG – Moderate Continuous Season Long Grazing

NF – No Fire
NS – Natural Succession
NWC – Noxious Weed Control
NWI – Noxious Weed Invasion
NU – Nonuse
P&C – Plow & Crop (including hay)
PG – Prescribed Grazing
RPT – Re-plant Trees
RS – Re-seed
SGD – Severe Ground Disturbance
SHC – Severe Hoof Compaction
WD – Wildlife Damage (Beaver)
WF – Wildfire

Plant Community Composition and Group Annual Production
Reference Plant Community (HCPC)

COMMON NAME/GROUP NAME	SCIENTIFIC NAME	SYMBOL	Annual Production (Normal Year) Total: 700		
			Group	lbs./acre	% Comp.
GRASSES AND GRASS-LIKES					
GRASSES/GRASSLIKES					
Western wheatgrass	Pascopyrum smithii	PASM	1	175 - 245	25 - 35
Needleandthread	Hesperostipa comata	HECO26	2	35 - 105	5 - 15
Bluebunch wheatgrass	Pseudoroegneria spicata	PSSP6	3	35 - 70	5 - 10
MISC. GRASSES/GRASSLIKES			**4**	**70 - 175**	**10 - 25**
Blue grama	Bouteloua gracilis	BOGR2	4	0 - 35	0 - 5
Bottlebrush squirreltail	Elymus elymoides	ELEL5	4	0 - 35	0 - 5
Indian ricegrass	Achnatherum hymenoides	ACHY	4	0 - 35	0 - 5
Mutton grass	Poa fendleriana	POFE	4	0 - 35	0 - 5
Plains reedgrass	Calamagrostis montanensis	CAMO	4	0 - 35	0 - 5
Prairie junegrass	Koeleria macrantha	KOMA	4	0 - 35	0 - 5
Sandberg bluegrass	Poa secunda	POSE	4	0 - 35	0 - 5
Threadleaf sedge	Carex filifolia	CAFI	4	0 - 35	0 - 5
other perennial grasses (native)		2GP	4	0 - 35	0 - 5
FORBS			**5**	**35 - 70**	**5 - 10**
Fringed sagewort	Artemisia frigida	ARFR4	5	0 - 35	0 - 5
Hoods phlox	Phlox hoodii	PHHO	5	0 - 35	0 - 5
Nailwort	Paronychia spp.	PARON	5	0 - 35	0 - 5
Sandwort	Arenaria spp.	ARENA	5	0 - 35	0 - 5
Scarlet globemallow	Sphaceralcea coccinea	SPCO	5	0 - 35	0 - 5
Stemless goldenweed	Stenotus acaulis	STAC	5	0 - 35	0 - 5
Woody aster	Xylorhiza spp.	XYLOR	5	0 - 35	0 - 5
other perennial forbs (native)		2FP	5	0 - 35	0 - 5
TREES/SHRUBS					
Birdfoot sagebrush	Artemisia pedatifida	ARPE6	6	70 - 140	10 - 20
Gardner's saltbush	Atriplex gardneri	ATGA	7	70 - 140	10 - 20
MISC. SHRUBS			**8**	**35 - 70**	**5 - 10**
Big sagebrush	Artemisia tridentata	ARTR2	8	0 - 35	0 - 5
Green rabbitbrush	Chrysothamnus viscidiflorus	CHVI8	8	0 - 35	0 - 5
Winterfat	Krascheninnikovia lanata	KRLA2	8	0 - 35	0 - 5
other shrubs & half shrubs (native)		2SHRUB	8	0 - 35	0 - 5

This list of plants and their relative proportions are based on near normal years. Fluctuations in species composition and relative production may change from year to year dependent upon precipitation or other climatic factors.

Plant Community Narratives

Following are the narratives for each of the described plant communities. These plant communities may not represent every possibility, but they probably are the most prevalent and repeatable plant communities. The plant composition tables shown above have been developed from the best available knowledge at the time of this revision. As more data is collected, some of these plant communities may be revised or removed, and new ones may be added. None of these plant communities should necessarily be thought of as "Desired Plant Communities". According to the USDA NRCS National Range and Pasture Handbook, Desired Plant Communities (DPC's) will be determined by the decision-makers and will meet minimum quality criteria established by the NRCS. The main purpose for including any description of a plant community here is to capture the current knowledge and experience at the time of this revision.

Rhizomatous Wheatgrass/ Birdfoot Sage Plant Community (HCPC)

The interpretive plant community for this site is the Historic Climax Plant Community. Potential vegetation is estimated at 60% grasses or grass-like plants, 10% forbs and 30% woody plants. The major grasses include western wheatgrass, needleandthread, and bluebunch wheatgrass. Other grasses include Sandberg bluegrass, prairie junegrass, bottlebrush squirreltail. Birdfoot sagebrush and Gardners saltbush are the major woody plants.

A typical plant composition for this state consists of western wheatgrass 25-35%, needleandthread 5-15%, bluebunch wheatgrass 5-10%, 10-25% other grasses/grasslikes, perennial forbs 5-10%, birdfoot sagebrush 10-20%, and Gardners saltbush 10-20%. Ground cover, by ocular estimate, varies from 15-25%.

The total annual production (air-dry weight) of this state is about 700 pounds per acre, but it can range from about 500 lbs./acre in unfavorable years to about 900 lbs./acre in above average years.

The following is the growth curve of this plant community expected during a normal year:
Growth curve number: WY0901
Growth curve name: 10-14SE, UPLAND SITES
Growth curve description: ALL UPLAND SITES

JAN	FEB	MAR	APR	MAY	JUN	JUL	AUG	SEP	OCT	NOV	DEC
0	0	0	10	35	40	10	0	5	0	0	0

(Monthly percentages of total annual growth)

This state is extremely stable and well adapted to the Cool Central Desertic Basins and Plateaus climate. The diversity in plant species allows for high drought resistance. This is a sustainable plant community (site/soil stability, watershed function, and biologic integrity).

Transitions or pathways leading to other plant communities are as follows:

- Heavy Continuous Season-long Grazing will convert the plant community to the *Woody Aster/ Birdfoot Sagebrush Plant Community.*

- Continuous Season-long Grazing will convert the plant community to the *Rhizomatous Birdfoot Sagebrush/Short Grass Plant Community.*

Birdfoot Sagebrush/Short Grass Plant Community

This plant community is the result of moderate continuous season long grazing of the HCPC. Birdfoot sagebrush and short stature grasses such as prairie junegrass, Sandberg bluegrass, and bottlebrush squirreltail dominate. Birdfoot sagebrush usually comprises 30-40% of annual production. When compared to the HCPC, needleandthread and bluebunch wheatgrass have decreased, rhizomatous wheatgrasses remain and birdfoot sage has increased.

The total annual production (air-dry weight) of this state is about 500 pounds per acre, but it can range from about 200 lbs./acre in unfavorable years to about 700 lbs./acre in above average years.

The following is the growth curve of this plant community expected during a normal year:
Growth curve number: WY0901
Growth curve name: 10-14SE, UPLAND SITES
Growth curve description: ALL UPLAND SITES

JAN	FEB	MAR	APR	MAY	JUN	JUL	AUG	SEP	OCT	NOV	DEC
0	0	0	10	35	40	10	0	5	0	0	0

(Monthly percentages of total annual growth)

The soil is somewhat protected and erosion will increase if management is not changed. The biotic integrity is intact but may be reduced due to loss of diversity. The watershed is functioning and may be at risk.

Transitional pathways leading to other plant communities are as follows:

- Prescribed Grazing or Long-term Prescribed Grazing in combination with Brush Management will return this state to near *Historic Climax Plant Community (Rhizomatous Wheatgrass/ Birdfoot Sage Plant Community).*

- Moderate to Heavy Continuous Season-long Grazing will convert the plant community to the *Woody Aster/Birdfoot Sagebrush Plant Community.*

Woody Aster/Birdfoot Sagebrush Plant Community
This plant community is a result of heavy continuous season-long grazing. Birdfoot sagebrush and woody aster provide 70-80% of the annual production. Cool season bunchgrasses decrease while rhizomatous wheatgrass prevails.

The total annual production (air-dry weight) of this state is about 200 pounds per acre, but it can range from about 100 lbs./acre in unfavorable years to about 300 lbs./acre in above average years.

The following is the growth curve of this plant community expected during a normal year:
Growth curve number: WY0901
Growth curve name: 10-14SE, UPLAND SITES
Growth curve description: ALL UPLAND SITES

JAN	FEB	MAR	APR	MAY	JUN	JUL	AUG	SEP	OCT	NOV	DEC
0	0	0	10	35	40	10	0	5	0	0	0

(Monthly percentages of total annual growth)

This state is unstable and vulnerable to excessive erosion. The biotic integrity of this plant community is at risk or non-functioning. The watershed is usually at risk or non-functioning as bare ground increases.

Transitional pathways leading to other plant communities are as follows:

- Brush Management, Chemical Seedbed Prep, Reseeding and Long-term Prescribed Grazing may eventually return this state to near *Historic Climax Plant Community (Rhizomatous Wheatgrass/ Birdfoot Sage Plant Community).*

Ecological Site Interpretations

Animal Community – Wildlife Interpretations

Rhizomatous Wheatgrass/ Birdfoot Sagebrush Plant Community (HCPC): Suitable thermal and escape cover for mule deer may be limited due to the low height of woody plants. However, sagebrush may provide winter forage for mule deer, antelope and sage grouse. Open spaces are potential sage grouse lek locations.

Birdfoot Sagebrush/Short Grass Plant Community: This plant community has a low level of diversity. Due to the dominance of grasses, feed for browsing animals is limited. Areas of bare ground may provide leks for sage grouse.

Woody Aster/Birdfoot Sagebrush Plant Community: This plant community may be beneficial for the same wildlife that would use the Historic Climax Plant Community. However, the plant community composition is less diverse, and thus, less apt to meet the seasonal needs of these animals.

Animal Preferences (Quarterly - 1,2,3,4) for commonly occuring plants in MLRA 34A, 10-14 inch High Plains Southeast

COMMON NAME/ GROUP NAME	SCIENTIFIC NAME	SCIENTIFIC SYMBOL	*Cattle*	*Sheep*	*Horses*	*Mule Deer*	*Antelope*	*Elk*
GRASSES/GRASSLIKES								
alkali bluegrass	Poa juncifolia	POJU	UDUD	NDNU	UDUD	UDUU	UDUU	DPDD
alkali sacaton	Sporobolus airoides	SPAI	UDPU	UPDU	UPDU	UUDU	UUDU	UDPU
American mannagrass	Glyceria grandis	GLGR	DDDD	DDDD	DDDD	UUUU	UUUU	DDDD
Baltic rush	Juncus balticus	JUBA	NNNN	NNNN	NNNN	NNNN	NNNN	NNNN
basin wildrye	Leymus cinereus	LECI4	DPDD	UPDU	DPDD	UDUU	UDUU	DPDD
Bloomer's ricegrass	Oryzopsis bloomeri	ORBL	PPPP	PPPP	PPPP	PPPP	PPPP	PPPP
blowout grass	Redfieldia flexuosa	REFL	UUDU	UUDU	UUDU	UUDU	UUDU	UUDU
blue grama	Bouteloua gracilis	BOGR2	UDPU	UDPU	UDPU	UUDU	UUDU	UUDU
bluebunch wheatgrass	Pseudoroegneria spicata	PSSP6	DPDD	UPDD	DPDD	UDUU	UDUU	DPDD
bluejoint reedgrass	Calamagrostis canadensis	CACA4	UPDU	UDUU	UPDU	UDUU	UDUU	UPDU
bottlebrush squirreltail	Elymus elymoides	ELELE	DDDD	DDDD	DDDD	UUUU	UUUU	DDDD
Canada wildrye	Elymus canadensis	ELCA4	UDUU	NUNN	UDUU	NUNN	NUNN	UDUU
Canby bluegrass	Poa canbyi (syn. to Poa secunda)	POCA (POSE)	PPPP	PPPP	PPPP	PPPP	PPPP	PPPP
green needlegrass	Nassella viridula	NAVI4	DPPD	UPDU	DPPD	UDUU	UDUU	DPPD
Indian ricegrass	Achnatherum hymenoides	ACHY	DPPD	UPDU	DPPD	UDUU	UDUU	DPPD
inland saltgrass	Distichlis spicata	DISP	NUUN	NUUN	NUUN	NUUN	NUUN	NUUN
little bluestem	Schizachyrium scoparium	SCSC	UDPU	UPDU	UPDU	UUDU	UUDU	UDPU
mat muhly	Muhlenbergia richardsonis	MURI	UUUU	UUUU	UUUU	UUUU	UUUU	UUUU
mountain muhly	Muhlenbergia montana	MUMO	DDDD	DDDD	DDDD	DDDD	UUUU	DDDD
muttongrass	Poa fendleriana	POFE	PPPP	PPPP	PPPP	PPPP	PPPP	PPPP
Nebraska sedge	Carex nebrascensis	CANE2	UDUD	UPND	UDUD	UPND	UPND	UDUD
needleandthread	Hesperostipa comata ssp. comata	HECOC8	DPDD	UPDU	DPDD	UDUU	UDUU	DPDD
needleleaf sedge	Carex duriuscula	CADU6	UUUU	UUUU	UUUU	UUUU	UUUU	UUUU
northern reedgrass	Calamagrostis stricta ssp. inexpansa	CASTI3	UPDU	UDUU	UPDU	UDUU	UDUU	UPDU
Nuttall's alkaligrass	Puccinellia nuttalliana	PUNU2	DPUD	NPND	DPUD	UDUU	UDUU	DPPD
plains reedgrass	Calamagrostis montanensis	CAMO	UPDU	UDUU	UPDU	UDUU	UDUU	UPDU
prairie junegrass	Koeleria macrantha	KOMA	UDUU	NDNU	UDUU	UDUU	UDUU	UDUU
sand dropseed	Sporobolus cryptandrus	SPCR	NUUN	NUUN	NUUN	NUUN	NUUN	NUUN
Sandberg bluegrass	Poa secunda	POSE	NPUN	NPUN	NPUN	NDUN	NDUN	NPUN
slender wheatgrass	Elymus trachycaulus	ELTR7	DPDD	UPDD	DPDD	UDUU	UDUU	DPDD
thickspike wheatgrass	Elymus lanceolatus ssp. lanceolatus	ELLAL	DPDD	UPDD	DPDD	UDUU	UDUU	DPDD
threadleaf sedge	Carex filifolia	CAFI	UDUD	UPND	UDUD	UPND	UPND	UDUD
tufted hairgrass	Deschampsia caespitosa	DECA18	PPPP	PPPP	PPPP	DDDD	DDDD	PPPP
western wheatgrass	Pascopyrum smithii	PASM	DPDD	UPDD	DPDD	UDUU	UDUU	DPDD
FORBS								
American bistort	Polygonum bistortoides	POBI6	DDDD	DDDD	DDDD	DDDD	DDDD	DDDD
arrowgrass	Triglochin spp.	TRIGL	TTTT	TTTT	TTTT	TTTT	TTTT	TTTT
aster	Eucephalus spp.	EUCEP2	NNNN	NNNN	NNNN	NNNN	NNNN	NNNN
biscuitroot	Lomatium spp.	LOMAT	UDUU	UDDU	UDUU	UDDU	UDDU	UDDU
blue-eyed grass	Sisyrinchium spp.	SISYR	UUDU	UUPU	UUDU	UUDU	UUDU	UUDU
buckwheats	Eriogonum spp.	ERIOG	UUUU	UUUU	UUUU	UUUU	UUUU	UUUU
clovers	Trifolium spp.	TRIFO	PPPP	PPPP	PPPP	PPPP	PPPP	PPPP
deathcamas	Zigadenus venenosus	ZIVE	TTTT	TTTT	TTTT	TTTT	TTTT	TTTT
desert princesplume	Stanleya pinnata	STPI	TTTT	TTTT	TTTT	TTTT	TTTT	TTTT
dock	Rumex spp.	RUMEX	UUUU	UUUU	UUUU	UUUU	UUUU	UUUU
fleabanes	Erigeron spp.	ERIGE2	DDDD	DDDD	DDDD	DDDD	DDDD	DDDD
fringed sagewort	Artemisia frigida	ARFR4	UUUU	UUUU	UUUU	UUUU	UUUU	UUUU
hawksbeard	Crepis acuminata	CRAC2	UUUU	PPPP	UUUU	DDDD	DDDD	UUUU
Hoods phlox	Phlox hoodii	PHHO	UUUU	UUUU	UUUU	UUUU	UUUU	UUUU
horsetails	Equisetum spp.	EQUIS	UUUU	UUUU	UUUU	UUUU	UUUU	UUUU
iris	Iris spp.	IRIS	NUUN	NUUN	NNNN	NUUN	NUUN	NUUN
larkspur	Delphinium spp.	DELPH	TTTT	TTTT	TTTT	TTTT	TTTT	TTTT
milkvetch	Astragalus spp.	ASTRA	UDUU	UDUU	UDUU	UDUU	UDUU	UDUU
nailwort	Paronychia spp.	PARON	NNNN	NNNN	NNNN	NNNN	NNNN	NNNN
paintbrushes	Castilleja spp.	CAST	DDDD	DDDD	DDDD	DDDD	DDDD	DDDD
penstemons	Penstemon spp.	PENST	UPPU	UPPU	UPPU	UPPU	UPPU	UPPU
phlox	Phlox spp.	PHLOX	NNNN	NNNN	NNNN	NNNN	NNNN	NNNN
primrose	Primula spp.	PRIMU	UUUU	UUUU	UUUU	UUUU	UUUU	UUUU
pussytoes	Antennaria spp.	ANTEN	NNNN	NNNN	NNNN	NNNN	NNNN	NNNN
Rush skeletonplant	Lygodesmia juncea	LYJU	UUUU	UUUU	UUUU	UUUU	UUUU	UUUU
sagebrush gilia (granite prickly phlox)	Leptodactylon pungens	LEPU	UUUU	UUUU	UUUU	UUUU	UUUU	UUUU
sandwort	Arenaria spp.	ARENA	NNNN	NNNN	NNNN	NNNN	NNNN	NNNN
scarlet globemallow	Sphaeralcea coccinea	SPCO	UUDU	UDDU	UUDU	UPPU	UDDD	UDDD
scurfpea	Psoralidium spp.	PSORA2	NNNN	NUUN	NNNN	NUUN	NUUN	NUUN
stemless goldenweed	Stenotus acaulis	STAC	UUUU	UUUU	UUUU	UUUU	UUUU	UUUU
stonecrop	Sedum spp.	SEDUM	UUUU	UUUU	UUUU	UUUU	UUUU	UUUU
toadflax	Comandra umbellata	COUMP	UUUU	UUUU	UUUU	UUUU	UUUU	UUUU
violets	Viola spp.	VIOLA	DDDD	DDDD	DDDD	DDDD	DDDD	DDDD
water hemlock	Cicuta spp.	CICUT	TTTT	TTTT	TTTT	TTTT	TTTT	TTTT
waterleaf	Hydrophyllum	HYDRO4	DDDD	PPPP	DDDD	PPPP	DDDD	DDDD
western ragweed	Ambrosia psilostachya	AMPS	NNNN	NNNN	NNNN	NNNN	NNNN	NNNN
western yarrow	Achillea millefolium	ACMI2	NUUN	NUUN	NNNN	NUUN	NUUN	NUUN
wild onion	Allium textile	ALTE	UDUU	UDUU	UDUU	UDUU	UDUU	UDUU
woodyaster	Xylorhiza spp.	XYLOR	TTTT	TTTT	TTTT	TTTT	TTTT	TTTT
TREES, SHRUBS & HALF-SHRUBS								
antelope bitterbrush	Purshia tridentata	PUTR2	PDDD	PDDD	DDUD	PDDP	PDPP	PDDP
big sagebrush	Artemisia tridentata	ARTR2	UNUU	DUUD	UNNU	PPPP	PUDP	DUUU
birdfoot sagebrush	Artemisia pedatifida	ARPE6	UUUU	UUUU	UUUU	UUUU	UUUU	UUUU
black sagebrush	Artemisia nova	ARNO4	UUUU	PPPP	UUUU	PPPP	PPPP	UUUU
chokecherry (toxic in large amounts)	Prunus virginiana	PRVI	DDDD	DDDD	DDDD	PPPP	DDDD	DDDD
currant	Ribes spp.	RIBES	DDDD	DDDD	DDDD	PPPP	DDDD	DDDD
dogwood	Cornus spp.	CORNU	DDDD	DDDD	DDDD	DDDD	UUUU	DDDD
fourwing saltbush	Atriplex canescens	ATCA2	PDDP	PDDP	PDDP	PDDP	PDDP	PDDP
Gardner's saltbush	Atriplex gardneri	ATGA	PDDP	PDDP	DUUD	PDDP	PDDP	PDDP
greasewood (toxic in large amounts)	Sarcobatus vermiculatus	SAVE4	DUUD	DUUD	DUUD	DUUD	DUUD	DUUD
green rabbitbrush	Chrysothamnus viscidiflorus	CHVI8	DUUD	DUUD	UNNU	PUDD	PUDD	DUUD
greenmolly summercypress	Kochia americana	KOAM	UUUU	DDDD	UUUU	UUUU	UUUU	UUUU
junipers	Juniperus scopulorum	JUSC2	UUUU	UUUU	UUUU	UUUU	UUUU	UUUU
limber pine	Pinus flexilis	PIFL2	NNNN	NNNN	NNNN	NNNN	NNNN	NNNN
plains cottonwood	Populus deltoides ssp. monilifera	PODEM	DUDD	DUDD	DUDD	DUDD	DUDD	DUDD
rubber rabbitbrush	Ericameria nauseosa	ERNA10	UUUU	DUUD	UUUU	UDDU	DUUD	DUUU
serviceberry	Amelanchier alnifolia	AMAL2	DDDD	PPPP	DDDD	PPPP	DDDD	DDDD
shadscale saltbush	Atriplex confertifolia	ATCO	UUUU	DDDD	UUUU	DDDD	UUUU	UUUU
shrubby cinquefoil	Dasiphora floribunda	DAFL3	UUUU	UUUU	UUUU	UUUU	UUUU	UUUU
silver buffaloberry	Shepherdia argentea	SHAR	DUUU	DUUU	UUUU	UUUU	PUDP	DUUU
silver sagebrush	Artemisia cana	ARCA13	DUUD	DUUD	UNNU	PPPP	PDDP	DUUD
skunkbush sumac	Rhus trilobata	RHTR	DUUD	DUUD	UUUU	DUUD	DUUD	DUUD
spineless horsebrush	Tetradymia canescens	TECA2	UUUU	UUUU	UUUU	UUUU	UUUU	UUUU
spiny horsebrush	Tetradymia spinosa	TESP2	UUUU	UUUU	UUUU	UUUU	UUUU	UUUU
true mountainmahogany	Cercocarpus montanus	CEMO2	DDDD	PDDD	DDDD	UNNU	PDDP	PDDD
western snowberry	Symphoricarpos occidentalis	SYOC	UUUU	UUUU	UUUU	UUUU	DUDD	DUUU
wildrose	Rosa woodsii var. woodsii	ROWOW	UDDU	UDDU	NUUN	UDDU	UDDU	UDDU
willows	Salix spp.	SALIX	PUDP	PUDP	DUUD	UUUU	PUDP	PUDP
winterfat	Krascheninnikovia lanata	KRLA2	PPPP	PPPP	PPPP	PPPP	PPPP	PPPP

N = not used; U = undesirable; D = desirable; P = preferred; T = toxic

Animal Community – Grazing Interpretations

The following table lists suggested stocking rates for cattle under continuous season-long grazing under normal growing conditions. These are conservative estimates that should be used only as guidelines in the initial stages of the conservation planning process. Often, the current plant composition does not entirely match any particular plant community (as described in this ecological site description). Because of this, a field visit is recommended, in all cases, to document plant composition and production. More precise carrying capacity estimates should eventually be calculated using this information along with animal preference data, particularly when grazers other than cattle are involved. Under more intensive grazing management, improved harvest efficiencies can result in an increased carrying capacity. If distribution problems occur, stocking rates must be reduced to maintain plant health and vigor.

Plant Community	Production (lb./ac)	Carrying Capacity* (AUM/ac)
Rhizomatous Wheatgrass/ Birdfoot Sagebrush (HCPC)	500-900	0.2
Birdfoot Sagebrush/Short Grass	200-700	0.1
Woody Aster/Birdfoot Sagebrush	100-300	0.06

* - Continuous, season-long grazing by cattle under average growing conditions.

Grazing by domestic livestock is one of the major income-producing industries in the area. Rangeland in this area may provide yearlong forage for cattle, sheep, or horses. During the dormant period, the forage for livestock use needs to be supplemented with protein because the quality does not meet minimum livestock requirements.

Hydrology Functions

Water is the principal factor limiting forage production on this site. This site is dominated by soils in hydrologic group D. Infiltration ranges from slow to very slow. Runoff potential for this site varies from high to very high depending on ground cover (refer to Part 630, NRCS National Engineering Handbook for detailed hydrology information).

Rills and gullies should not typically be present. Water flow patterns should be barely distinguishable if at all present. Pedestals are only slightly present in association with bunchgrasses. Litter typically falls in place, and signs of movement are not common. Chemical and physical crusts are rare to non-existent. Cryptogrammic crusts are present, but only cover 1-2% of the soil surface.

Recreational Uses

This site provides limited hunting opportunities.

Wood Products

No appreciable wood products are present on the site.

Other Products

None noted.

Supporting Information

Associated Sites

Similar Sites

Inventory Data References (narrative)

Information presented here has been derived from NRCS clipping data and other inventory data. Field observations from range trained personnel were also used. Other sources used as references include: USDA NRCS Water and Climate Center, USDA NRCS National Range and Pasture Handbook, and USDA NRCS Soil Surveys from various counties.

Inventory Data References

Data Source	Number of Records	Sample Period	State	County
SCS-RANGE-417	69	1967-1988	WY	Carbon & others

State Correlation

Type Locality

Field Offices

Baggs, Casper, Lander, Laramie, Medicine Bow, Riverton, Saratoga

Relationship to Other Established Classifications

Other References

Site Description Approval

_____ _____

State Range Management Specialist Date