United States Department of Agriculture
Natural Resources Conservation Service

Ecological Site Description

Site Type: Rangeland

Site Name: Wetland (WL), 10-14" P.Z., High Plains Southeast

Site ID: R034AY378WY

Major Land Resource Area: 34A-Cool Central Desertic Basins and Plateaus

Physiographic Features

This site will usually occur on level or gently sloping bottomlands, near springs, seeps, and sloughs.

Landform: drainage ways, oxbows, and stream terraces **Aspect:** N/A

	Minimum	Maximum
Elevation (feet):	5500	7500
Slope (percent):	0	6
Water Table Depth (inches):	0	18
Flooding:		
Frequency:	occasional	frequent
Duration:	very brief	brief
Ponding:		
Depth (inches):	0	12
Frequency:	brief	very long
Duration:	none	none
Runoff Class:	negligible	high

Climatic Features

Annual precipitation ranges from 10-14 inches per year. Wide fluctuations may occur in yearly precipitation and result in more dry years than those with more than normal precipitation. Temperatures show a wide range between summer and winter and between daily maximums and minimums. This is predominantly due to the high elevation and dry air, which permits rapid incoming and outgoing radiation. Cold air outbreaks in winter move rapidly from northwest to southeast and account for extreme minimum temperatures. Extreme storms may occur during the winter, but most severely affect ranch operations during late winter and spring.

Daytime winds are generally stronger than nighttime and occasional strong storms may bring brief periods of high winds with gusts to more than 50 mph.

Growth of native cool season plants begins about April 15 and continues to about June 15. Some green up of cool season plants usually occurs in September.

The following information is from the “Laramie” climate station:

	Minimum	Maximum	5 yrs. out of 10 between
Frost-free period (days):	57	149	June 1 – September 16
Freeze-free period (days):	94	183	May 15 – September 28
Annual Precipitation (inches):	5.8	17.34	

Mean annual precipitation: 11.53 inches
Mean annual air temperature: 42.2°F (30.4°F Avg. Min. to 53.9°F Avg. Max.)

For detailed information visit the Natural Resources Conservation Service National Water and Climate Center at http://www.wcc.nrcs.usda.gov/ website. Other climate station(s) representative of this precipitation zone include "Dixon " and "Medicine Bow".

Influencing Water Features

Wetland Description:	System	Subsystem	Class	Sub-class
	Palustrine	None	Emergent vegetation	Persistent

Stream Type: C (Rosgen)

Representative Soil Features

This site consists of moderately deep organic and deep loamy or silty soils with a seasonal high water table at or very near the surface. They are on nearly level to slightly depressed areas with poor surface drainage. Subsoils are usually mottled or gleyed.

Major Soil Series correlated to this site include:

Parent Material Kind: alluvium
Parent Material Origin: mixed
Surface Texture: loam, clay loam, silty clay loam, thin peat layers common
Surface Texture Modifier: gravelly
Subsurface Texture Group: loam, clay loam, fine sandy loam, sandy clay loam
Surface Fragments ≤ 3" (% Cover): 0-20
Surface Fragments > 3" (%Cover): 0-5
Subsurface Fragments ≤ 3" (% Volume): 0-40
Subsurface Fragments > 3" (% Volume): 0-15

	Minimum	Maximum
Drainage Class:	very poorly	poorly
Permeability Class:	slow	moderate
Depth (inches):	20	>60
Electrical Conductivity (mmhos/cm) ≤20":	0	8
Sodium Absorption Ratio ≤20":	0	5
Soil Reaction (1:1 Water) ≤20":	6.1	8.4
Soil Reaction (0.1M CaCl2) ≤20":	5.6	7.3
Available Water Capacity (inches) ≤30":	2.25	6.0
Calcium Carbonate Equivalent (percent) ≤20":	0	15

Plant Communities

Ecological Dynamics of the Site:

As this site deteriorates species such as Baltic rush, low growing sedges, and forbs replace more desirable species. Production and density of native bunchgrasses such as tufted hairgrass and northern reedgrass are greatly reduced. Willows ,if present, may become decadent as a result of heavy browsing and the site becomes vulnerable to noxious weed invasion.

The Historic Climax Plant Community (description follows the plant community diagram) has been determined by the study of rangeland relic areas, or areas protected from excessive disturbance. Trends in plant communities going from heavily grazed areas to lightly grazed areas, seasonal use pastures, and historical accounts have also been used.

The following is a State and Transition Model diagram that illustrates the common plant communities (states) that can occur on the site and the transitions between these communities. The ecological processes will be discussed in more detail in the plant community narratives following the diagram.

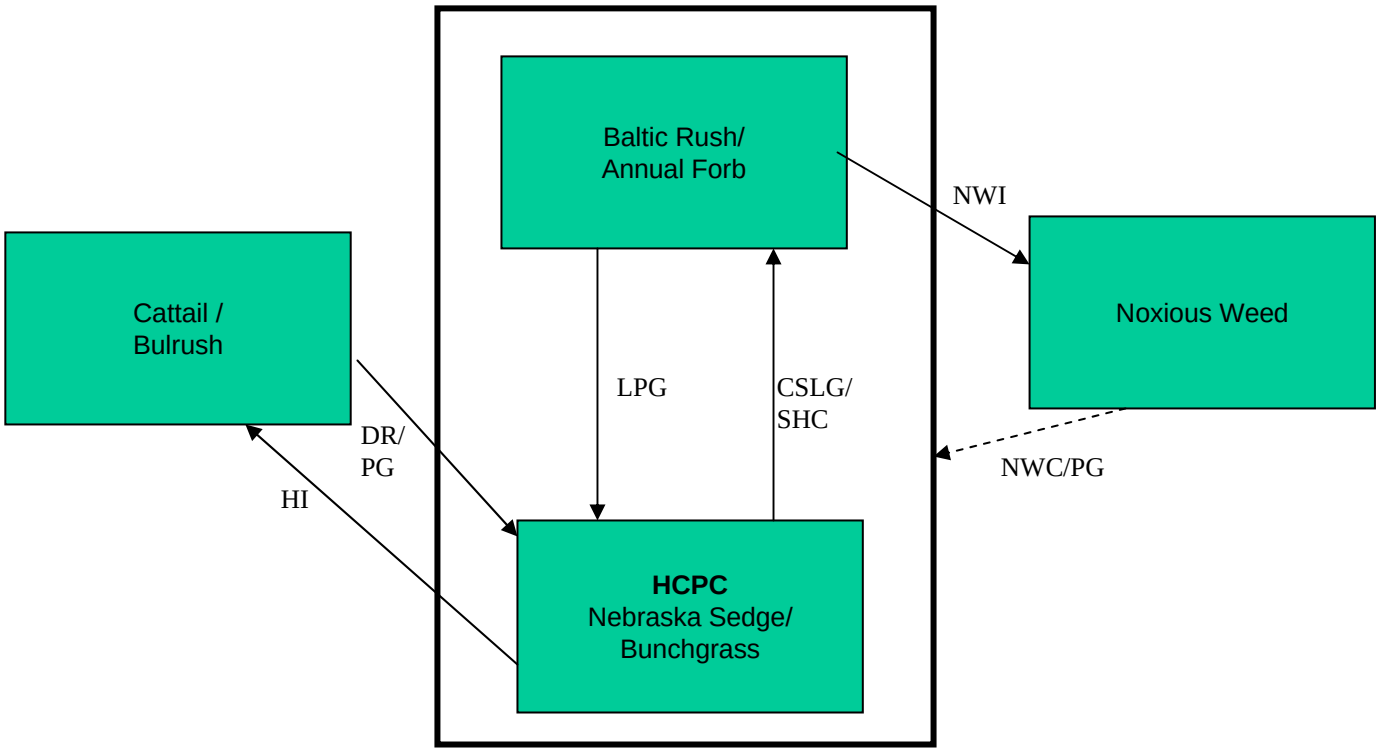

BMA – Brush Management (all methods)
BMC – Brush Management (chemical)
BMF – Brush Management (fire)
BMM – Brush Management (mechanical)
CSP – Chemical Seedbed Preparation
CSLG – Continuous Season-long Grazing
DR – Drainage
CSG – Continuous Spring Grazing
HB – Heavy Browse
HCSLG – Heavy Continuous Season-long Grazing
HI – Heavy Inundation
LPG – Long-term Prescribed Grazing
MT – Mechanical Treatment (chiseling, ripping, pitting)
MCSLG – Moderate Continuous Season Long Grazing
NF – No Fire
NS – Natural Succession
NWC – Noxious Weed Control
NWI – Noxious Weed Invasion
NU – Nonuse
P&C – Plow & Crop (including hay)
PG – Prescribed Grazing
RPT – Re-plant Trees
RS – Re-seed
SGD – Severe Ground Disturbance
SHC – Severe Hoof Compaction
WD – Wildlife Damage (Beaver)
WF – Wildfire

Plant Community Composition and Group Annual Production
Reference Plant Community (HCPC)

COMMON NAME/GROUP NAME	SCIENTIFIC NAME	SYMBOL	Annual Production (Normal Year) Total: 5000		
			Group	lbs./acre	% Comp.
GRASSES AND GRASS-LIKES					
GRASSES/GRASSLIKES					
Nebraska sedge	Carex nebrascensis	CANE2	1	1750 - 2500	35 - 50
Northern reedgrass	Calamagrostis stricta	CAST13	2	500 - 1000	10 - 20
Tufted hairgrass	Deschampsia caespitosa	DECA18	3	250 - 750	5 - 15
Bluejoint reedgrass	Calamagrostis canadensis	CACAM	4	250 - 500	5 - 10
MISC. GRASSES/GRASSLIKES			**5**	**250 - 500**	**5 - 10**
American mannagrass	Glyceria grandis	GLGR	5	0 - 250	0 - 5
Baltic rush	Juncus balticus	JUBA	5	0 - 250	0 - 5
other perennial grasses (native)		2GP	5	0 - 250	0 - 5
FORBS			**6**	**250 - 500**	**5 - 10**
American bistort	Polygonum bistortoides	POBI6	6	0 - 250	0 - 5
Arrowgrass	Triglochin spp.	TRIGL	6	0 - 250	0 - 5
Blue-eyed grass	Sisyrinchium spp.	SISYR	6	0 - 250	0 - 5
Horsetail	Equisetum hyemale	EQHY	6	0 - 250	0 - 5
Iris	Iris spp.	IRIS	6	0 - 250	0 - 5
Water hemlock	Cicuta spp.	CICUT	6	0 - 250	0 - 5
Waterleaf	Hydrophyllum ssp.	HYDRO4	6	0 - 250	0 - 5
other perennial forbs (native)		2FP	6	0 - 250	0 - 5
TREES/SHRUBS					
Willows	Salix spp.	SALIX	7	250 - 750	5 - 15
Roses	Rosa woodsii var. woodsii	ROWOW	8	0 - 250	0 - 5
other shrubs & half shrubs (native)		2SHRUB	9	0 - 250	0 - 5

This list of plants and their relative proportions are based on near normal years. Fluctuations in species composition and relative production may change from year to year dependent upon precipitation or other climatic factors.

Plant Community Narratives

Following are the narratives for each of the described plant communities. These plant communities may not represent every possibility, but they probably are the most prevalent and repeatable plant communities. The plant composition tables shown above have been developed from the best available knowledge at the time of this revision. As more data is collected, some of these plant communities may be revised or removed, and new ones may be added. None of these plant communities should necessarily be thought of as "Desired Plant Communities". According to the USDA NRCS National Range and Pasture Handbook, Desired Plant Communities (DPC's) will be determined by the decision-makers and will meet minimum quality criteria established by the NRCS. The main purpose for including any description of a plant community here is to capture the current knowledge and experience at the time of this revision.

Nebraska Sedge / Bunchgrass Plant Community (HCPC)

The interpretive plant community for this site is the Historic Climax Plant Community. Potential vegetation is estimated at 80% grasses or grass-like plants, 10% forbs and 10% woody plants. The major grasses/grasslikes include Nebraska sedge, northern reedgrass, tufted hairgrass, and bluejoint reedgrass. Other species that may occur on this site include Baltic rush, American mannagrass, and a variety of wetland sedges and rushes. Willows or rose may also be present.

A typical plant composition for this state consists of Nebraska sedge 35-50%, northern reedgrass 10-20%, tufted hairgrass 5-15%, bluejoint reedgrass 5-10%, perennial forbs 5-10%, and willows 5-15%. Ground cover, by ocular estimate, varies from 60-70%.

The total annual production (air-dry weight) of this state is about 5000 pounds per acre, but it can range from about 3000 lbs./acre in unfavorable years to about 6000 lbs./acre in above average years.

The following is the growth curve of this plant community expected during a normal year:
Growth curve number: WY0903
Growth curve name: 10-14SE, FREE WATER SITES
Growth curve description: WL,Sb,SS FREE WATER SITES

JAN	FEB	MAR	APR	MAY	JUN	JUL	AUG	SEP	OCT	NOV	DEC
0	0	0	0	20	40	20	15	5	0	0	0

(Monthly percentages of total annual growth)

This state is extremely stable and well adapted to the Cool Central Desertic Basins and Plateaus climate. The diversity in plant species allows for high drought resistance. This is a sustainable plant community (site/soil stability, watershed function, and biologic integrity).

Transitions or pathways leading to other plant communities are as follows:

- Continuous Season-long Grazing and Severe Hoof Compaction will convert the plant community to the *Baltic Rush/Annual Forbs*

- Heavy Inundation will convert this community to a *Cattail/Bulrush Plant Community.*

Baltic Rush / Annual Forbs Plant Community

This plant community evolved under continuous season long grazing and severe hoof compaction. Species such as Baltic rush, Horsetail, American licorice, annual forbs and introduced species replace native bunchgrasses and Nebraska sedge. Continued disturbance of this plant community may allow invasion of noxious weeds. This state is susceptible to down cutting and excessive erosion due to reduced hydrologic function and replacement of deep rooted perennials.

The total annual production (air-dry weight) of this state is about 2500 pounds per acre, but it can range from about 1500 lbs. /acre in unfavorable years to about 3500 lbs. /acre in above average years.

The following is the growth curve of this plant community expected during a normal year:
Growth curve number: WY0903
Growth curve name: 10-14SE, FREE WATER SITES
Growth curve description: WL,Sb,SS FREE WATER SITES

JAN	FEB	MAR	APR	MAY	JUN	JUL	AUG	SEP	OCT	NOV	DEC
0	0	0	0	20	40	20	15	5	0	0	0

(Monthly percentages of total annual growth)

Transitional pathways leading to other plant communities are as follows:

- Long-term Prescribed Grazing will return this state to one which is similar to the *Historic Climax Plant Community (Nebraska Sedge / Bunchgrass Plant Community).*

- Noxious Weed Invasion / Continuous Season Long grazing will convert the plant community to the *Noxious Weed Plant Community.*

Cattail / Bulrush Plant Community
This plant community is the result of heavy inundation or flooding conditions. The historic vegetation is replaced by cattails, bulrushes and other species tolerant of this condition. This state is very stable but often dependant on hydrology created by small man made structures or beavers.

The total annual production (air-dry weight) of this state is about 4500 pounds per acre, but it can range from about 3500 lbs. /acre in unfavorable years to about 5500 lbs. /acre in above average years.

The following is the growth curve of this plant community expected during a normal year:
Growth curve number: WY0903
Growth curve name: 10-14SE, FREE WATER SITES
Growth curve description: WL,Sb,SS FREE WATER SITES

JAN	FEB	MAR	APR	MAY	JUN	JUL	AUG	SEP	OCT	NOV	DEC
0	0	0	0	20	40	20	15	5	0	0	0

(Monthly percentages of total annual growth)

Transitional pathways leading to other plant communities are as follows:

- Drainage followed by Prescribed grazing may eventually return this state to near *Historic Climax Plant Community (Nebraska Sedge/Bunchgrass Plant Community).*

Noxious Weed Plant Community
This plant community is the result of continuous grazing use accompanied by noxious weed invasion. Species such as Canada thistle, arrowgrass, and American licorice dominate this state. Bare ground has increased. The soil of this state is not well protected. Degraded stream banks may erode. The watershed is at risk and may produce excessive runoff.

The total annual production (air-dry weight) of this state is about 1500 pounds per acre, but it can range from about 500 lbs./acre in unfavorable years to about 2500 lbs./acre in above average years.

The following is the growth curve of this plant community expected during a normal year:

Growth curve number: WY0903
Growth curve name: 10-14SE, FREE WATER SITES
Growth curve description: WL, SB, SS FREE WATER SITES

JAN	FEB	MAR	APR	MAY	JUN	JUL	AUG	SEP	OCT	NOV	DEC
0	0	0	0	20	40	20	15	5	0	0	0

(Monthly percentages of total annual growth)

Transitional pathways leading to other plant communities are as follows:

- Noxious Weed Control with Prescribed Grazing may eventually convert this plant community to one similar to HCPC or Baltic Rush/Annual Forbs plant communities

Ecological Site Interpretations

Animal Community – Wildlife Interpretations

Nebraska Sedge/ Bunchgrass (HCPC): This plant community is very important for most wildlife in the area. Over 80% of all wildlife use this site to fulfill some part of their habitat needs. It provides forage and thermal and hiding cover for mule deer and moose. It provides nesting habitat for shorebirds, songbirds, and waterfowl as well as ground nesting birds such as harriers. The lush herbaceous material produces insects for sage grouse brood rearing and foraging. Dense ground cover provides escape cover, forage, and breeding areas for small mammals which draw predators such as raptors, red fox and coyote. Other birds that would frequent this plant community include red-wing blackbirds, sandhill cranes, western meadowlarks, neotropical migrants, and golden eagles.

Cattail/Bulrush Plant Community: This plant community may be beneficial for the same wildlife that would use the Historic Climax Plant Community. However, the plant community composition is less diverse, and thus, less apt to meet the seasonal needs of these animals. Red-wing blackbird and sandhill crane habitat is excellent.

Baltic Rush/Annual Forbs Plant Community: This plant community may be beneficial for some of the same wildlife that would use the Historic Climax Plant Community. However, the forage component is typically reduced and unable to support the same numbers of grazing animals, structural diversity is lost for neo-tropical migrants, cover decreased for deer, and nesting habitat for birds is impacted. It may provide some brood rearing and foraging opportunities for sage grouse when it occurs proximal to woody cover.

Noxious Weed Plant Community: This plant community is less diverse, and thus, less able to meet the habitat needs of many wildlife. Herbaceous forage and cover is not as dense and will aid in successful predation of nesting birds, therefore improving habitat for predators such as raptors, red fox, and coyote. It may provide some brood rearing and foraging opportunities for sage grouse when it occurs proximal to woody cover.

Animal Preferences (Quarterly - 1,2,3,4) for commonly occuring plants in MLRA 34A, 10-14 inch High Plains Southeast

COMMON NAME/ GROUP NAME	SCIENTIFIC NAME	SCIENTIFIC SYMBOL	*Cattle*	*Sheep*	*Horses*	*Mule Deer*	*Antelope*	*Elk*
GRASSES/GRASSLIKES								
alkali bluegrass	Poa juncifolia	POJU	UDUD	NDNU	UDUD	UDUU	UDUU	DPDD
alkali sacaton	Sporobolus airoides	SPAI	UDPU	UPDU	UPDU	UUDU	UUDU	UDPU
American mannagrass	Glyceria grandis	GLGR	DDDD	DDDD	DDDD	UUUU	UUUU	DDDD
Baltic rush	Juncus balticus	JUBA	NNNN	NNNN	NNNN	NNNN	NNNN	NNNN
basin wildrye	Leymus cinereus	LECI4	DPDD	UPDU	DPDD	UDUU	UDUU	DPDD
Bloomer's ricegrass	Oryzopsis bloomeri	ORBL	PPPP	PPPP	PPPP	PPPP	PPPP	PPPP
blowout grass	Redfieldia flexuosa	REFL	UUDU	UUDU	UUDU	UUDU	UUDU	UUDU
blue grama	Bouteloua gracilis	BOGR2	UDPU	UDPU	UDPU	UUDU	UUDU	UUDU
bluebunch wheatgrass	Pseudoroegneria spicata	PSSP6	DPDD	UPDD	DPDD	UDUU	UDUU	DPDD
bluejoint reedgrass	Calamagrostis canadensis	CACA4	UPDU	UDUU	UPDU	UDUU	UDUU	UPDU
bottlebrush squirreltail	Elymus elymoides	ELELE	DDDD	DDDD	DDDD	UUUU	UUUU	DDDD
Canada wildrye	Elymus canadensis	ELCA4	UDUU	NUNN	UDUU	NUNN	NUNN	UDUU
Canby bluegrass	Poa canbyi (syn. to Poa secunda)	POCA (POSE)	PPPP	PPPP	PPPP	PPPP	PPPP	PPPP
green needlegrass	Nassella viridula	NAVI4	DPPD	UPDU	DPPD	UDUU	UDUU	DPPD
Indian ricegrass	Achnatherum hymenoides	ACHY	DPPD	UPDU	DPPD	UDUU	UDUU	DPPD
inland saltgrass	Distichlis spicata	DISP	NUUN	NUUN	NUUN	NUUN	NUUN	NUUN
little bluestem	Schizachyrium scoparium	SCSC	UDPU	UPDU	UPDU	UUDU	UUDU	UDPU
mat muhly	Muhlenbergia richardsonis	MURI	UUUU	UUUU	UUUU	UUUU	UUUU	UUUU
mountain muhly	Muhlenbergia montana	MUMO	DDDD	DDDD	DDDD	DDDD	UUUU	DDDD
muttongrass	Poa fendleriana	POFE	PPPP	PPPP	PPPP	PPPP	PPPP	PPPP
Nebraska sedge	Carex nebrascensis	CANE2	UDUD	UPND	UDUD	UPND	UPND	UDUD
needleandthread	Hesperostipa comata ssp. comata	HECOC8	DPDD	UPDU	DPDD	UDUU	UDUU	DPDD
needleleaf sedge	Carex duriuscula	CADU6	UUUU	UUUU	UUUU	UUUU	UUUU	UUUU
northern reedgrass	Calamagrostis stricta ssp. inexpansa	CASTI3	UPDU	UDUU	UPDU	UDUU	UDUU	UPDU
Nuttall's alkaligrass	Puccinellia nuttalliana	PUNU2	DPUD	NPND	DPUD	UDUU	UDUU	DPPD
plains reedgrass	Calamagrostis montanensis	CAMO	UPDU	UDUU	UPDU	UDUU	UDUU	UPDU
prairie junegrass	Koeleria macrantha	KOMA	UDUU	NDNU	UDUU	UDUU	UDUU	UDUU
sand dropseed	Sporobolus cryptandrus	SPCR	NUUN	NUUN	NUUN	NUUN	NUUN	NUUN
Sandberg bluegrass	Poa secunda	POSE	NPUN	NPUN	NPUN	NDUN	NDUN	NPUN
slender wheatgrass	Elymus trachycaulus	ELTR7	DPDD	UPDD	DPDD	UDUU	UDUU	DPDD
thickspike wheatgrass	Elymus lanceolatus ssp. lanceolatus	ELLAL	DPDD	UPDD	DPDD	UDUU	UDUU	DPDD
threadleaf sedge	Carex filifolia	CAFI	UDUD	UPND	UDUD	UPND	UPND	UDUD
tufted hairgrass	Deschampsia caespitosa	DECA18	PPPP	PPPP	PPPP	DDDD	DDDD	PPPP
western wheatgrass	Pascopyrum smithii	PASM	DPDD	UPDD	DPDD	UDUU	UDUU	DPDD
FORBS								
American bistort	Polygonum bistortoides	POBI6	DDDD	DDDD	DDDD	DDDD	DDDD	DDDD
arrowgrass	Triglochin spp.	TRIGL	TTTT	TTTT	TTTT	TTTT	TTTT	TTTT
aster	Eucephalus spp.	EUCEP2	NNNN	NNNN	NNNN	NNNN	NNNN	NNNN
biscuitroot	Lomatium spp.	LOMAT	UDUU	UDDU	UDUU	UDDU	UDDU	UDDU
blue-eyed grass	Sisyrinchium spp.	SISYR	UUDU	UUPU	UUDU	UUDU	UUDU	UUDU
buckwheats	Eriogonum spp.	ERIOG	UUUU	UUUU	UUUU	UUUU	UUUU	UUUU
clovers	Trifolium spp.	TRIFO	PPPP	PPPP	PPPP	PPPP	PPPP	PPPP
deathcamas	Zigadenus venenosus	ZIVE	TTTT	TTTT	TTTT	TTTT	TTTT	TTTT
desert princesplume	Stanleya pinnata	STPI	TTTT	TTTT	TTTT	TTTT	TTTT	TTTT
dock	Rumex spp.	RUMEX	UUUU	UUUU	UUUU	UUUU	UUUU	UUUU
fleabanes	Erigeron spp.	ERIGE2	DDDD	DDDD	DDDD	DDDD	DDDD	DDDD
fringed sagewort	Artemisia frigida	ARFR4	UUUU	UUUU	UUUU	UUUU	UUUU	UUUU
hawksbeard	Crepis acuminata	CRAC2	UUUU	PPPP	UUUU	DDDD	DDDD	UUUU
Hoods phlox	Phlox hoodii	PHHO	UUUU	UUUU	UUUU	UUUU	UUUU	UUUU
horsetails	Equisetum spp.	EQUIS	UUUU	UUUU	UUUU	UUUU	UUUU	UUUU
iris	Iris spp.	IRIS	NUUN	NUUN	NNNN	NUUN	NUUN	NUUN
larkspur	Delphinium spp.	DELPH	TTTT	TTTT	TTTT	TTTT	TTTT	TTTT
milkvetch	Astragalus spp.	ASTRA	UDUU	UDUU	UDUU	UDUU	UDUU	UDUU
nailwort	Paronychia spp.	PARON	NNNN	NNNN	NNNN	NNNN	NNNN	NNNN
paintbrushes	Castilleja spp.	CAST	DDDD	DDDD	DDDD	DDDD	DDDD	DDDD
penstemons	Penstemon spp.	PENST	UPPU	UPPU	UPPU	UPPU	UPPU	UPPU
phlox	Phlox spp.	PHLOX	NNNN	NNNN	NNNN	NNNN	NNNN	NNNN
primrose	Primula spp.	PRIMU	UUUU	UUUU	UUUU	UUUU	UUUU	UUUU
pussytoes	Antennaria spp.	ANTEN	NNNN	NNNN	NNNN	NNNN	NNNN	NNNN
Rush skeletonplant	Lygodesmia juncea	LYJU	UUUU	UUUU	UUUU	UUUU	UUUU	UUUU
sagebrush gilia (granite prickly phlox)	Leptodactylon pungens	LEPU	UUUU	UUUU	UUUU	UUUU	UUUU	UUUU
sandwort	Arenaria spp.	ARENA	NNNN	NNNN	NNNN	NNNN	NNNN	NNNN
scarlet globemallow	Sphaeralcea coccinea	SPCO	UUDU	UDDU	UUDU	UPPU	UDDD	UDDD
scurfpea	Psoralidium spp.	PSORA2	NNNN	NUUN	NNNN	NUUN	NUUN	NUUN
stemless goldenweed	Stenotus acaulis	STAC	UUUU	UUUU	UUUU	UUUU	UUUU	UUUU
stonecrop	Sedum spp.	SEDUM	UUUU	UUUU	UUUU	UUUU	UUUU	UUUU
toadflax	Comandra umbellata	COUMP	UUUU	UUUU	UUUU	UUUU	UUUU	UUUU
violets	Viola spp.	VIOLA	DDDD	DDDD	DDDD	DDDD	DDDD	DDDD
water hemlock	Cicuta spp.	CICUT	TTTT	TTTT	TTTT	TTTT	TTTT	TTTT
waterleaf	Hydrophyllum	HYDRO4	DDDD	PPPP	DDDD	PPPP	DDDD	DDDD
western ragweed	Ambrosia psilostachya	AMPS	NNNN	NNNN	NNNN	NNNN	NNNN	NNNN
western yarrow	Achillea millefolium	ACMI2	NUUN	NUUN	NNNN	NUUN	NUUN	NUUN
wild onion	Allium textile	ALTE	UDUU	UDUU	UDUU	UDUU	UDUU	UDUU
woodyaster	Xylorhiza spp.	XYLOR	TTTT	TTTT	TTTT	TTTT	TTTT	TTTT
TREES, SHRUBS & HALF-SHRUBS								
antelope bitterbrush	Purshia tridentata	PUTR2	PDDD	PDDD	DDUD	PDDP	PDPP	PDDP
big sagebrush	Artemisia tridentata	ARTR2	UNUU	DUUD	UNNU	PPPP	PUDP	DUUU
birdfoot sagebrush	Artemisia pedatifida	ARPE6	UUUU	UUUU	UUUU	UUUU	UUUU	UUUU
black sagebrush	Artemisia nova	ARNO4	UUUU	PPPP	UUUU	PPPP	PPPP	UUUU
chokecherry (toxic in large amounts)	Prunus virginiana	PRVI	DDDD	DDDD	DDDD	PPPP	DDDD	DDDD
currant	Ribes spp.	RIBES	DDDD	DDDD	DDDD	PPPP	DDDD	DDDD
dogwood	Cornus spp.	CORNU	DDDD	DDDD	DDDD	DDDD	UUUU	DDDD
fourwing saltbush	Atriplex canescens	ATCA2	PDDP	PDDP	PDDP	PDDP	PDDP	PDDP
Gardner's saltbush	Atriplex gardneri	ATGA	PDDP	PDDP	DUUD	PDDP	PDDP	PDDP
greasewood (toxic in large amounts)	Sarcobatus vermiculatus	SAVE4	DUUD	DUUD	DUUD	DUUD	DUUD	DUUD
green rabbitbrush	Chrysothamnus viscidiflorus	CHVI8	DUUD	DUUD	UNNU	PUDD	PUDD	DUUD
greenmolly summercypress	Kochia americana	KOAM	UUUU	DDDD	UUUU	UUUU	UUUU	UUUU
junipers	Juniperus scopulorum	JUSC2	UUUU	UUUU	UUUU	UUUU	UUUU	UUUU
limber pine	Pinus flexilis	PIFL2	NNNN	NNNN	NNNN	NNNN	NNNN	NNNN
plains cottonwood	Populus deltoides ssp. monilifera	PODEM	DUDD	DUDD	DUDD	DUDD	DUDD	DUDD
rubber rabbitbrush	Ericameria nauseosa	ERNA10	UUUU	DUUD	UUUU	UDDU	DUUD	DUUU
serviceberry	Amelanchier alnifolia	AMAL2	DDDD	PPPP	DDDD	PPPP	DDDD	DDDD
shadscale saltbush	Atriplex confertifolia	ATCO	UUUU	DDDD	UUUU	DDDD	UUUU	UUUU
shrubby cinquefoil	Dasiphora floribunda	DAFL3	UUUU	UUUU	UUUU	UUUU	UUUU	UUUU
silver buffaloberry	Shepherdia argentea	SHAR	DUUU	DUUU	UUUU	UUUU	PUDP	DUUU
silver sagebrush	Artemisia cana	ARCA13	DUUD	DUUD	UNNU	PPPP	PDDP	DUUD
skunkbush sumac	Rhus trilobata	RHTR	DUUD	DUUD	UUUU	DUUD	DUUD	DUUD
spineless horsebrush	Tetradymia canescens	TECA2	UUUU	UUUU	UUUU	UUUU	UUUU	UUUU
spiny horsebrush	Tetradymia spinosa	TESP2	UUUU	UUUU	UUUU	UUUU	UUUU	UUUU
true mountainmahogany	Cercocarpus montanus	CEMO2	DDDD	PDDD	DDDD	UNNU	PDDP	PDDD
western snowberry	Symphoricarpos occidentalis	SYOC	UUUU	UUUU	UUUU	UUUU	DUDD	DUUU
wildrose	Rosa woodsii var. woodsii	ROWOW	UDDU	UDDU	NUUN	UDDU	UDDU	UDDU
willows	Salix spp.	SALIX	PUDP	PUDP	DUUD	UUUU	PUDP	PUDP
winterfat	Krascheninnikovia lanata	KRLA2	PPPP	PPPP	PPPP	PPPP	PPPP	PPPP

N = not used; U = undesirable; D = desirable; P = preferred; T = toxic

Animal Community – Grazing Interpretations

The following table lists suggested stocking rates for cattle under continuous season-long grazing under normal growing conditions. These are conservative estimates that should be used only as guidelines in the initial stages of the conservation planning process. Often, the current plant composition does not entirely match any particular plant community (as described in this ecological site description). Because of this, a field visit is recommended, in all cases, to document plant composition and production. More precise carrying capacity estimates should eventually be calculated using this information along with animal preference data, particularly when grazers other than cattle are involved. Under more intensive grazing management, improved harvest efficiencies can result in an increased carrying capacity. If distribution problems occur, stocking rates must be reduced to maintain plant health and vigor.

Plant Community	Production (lb. /ac)	Carrying Capacity* (AUM/ac)
Nebraska Sedge/Bunchgrass	4000-6000	1.6
Cattail/Bulrush	3500-5500	1.4
Baltic Rush/ Annual Forbs	1500-3500	0.8
Noxious Weed	500-2500	0.5

* - Continuous, season-long grazing by cattle under average growing conditions.

Grazing by domestic livestock is one of the major income-producing industries in the area. Rangeland in this area may provide yearlong forage for cattle, sheep, or horses. During the dormant period, the forage for livestock use needs to be supplemented with protein because the quality does not meet minimum livestock requirements.

Hydrology Functions

Climate is the principal factor limiting forage production on this site. This site is dominated by soils in hydrologic group D. Infiltration rate is very slow and runoff potential high for the soils of this site due to a high water table and saturated soil conditions. However, high forage production on this site diminishes runoff potential as long as site is managed for maintaining adequate residual vegetation. (Refer to Part 630, NRCS National Engineering Handbook for detailed hydraulic information).

Rills and gullies should not typically be present. Water flow patterns may be present if associated with a perennial flowing stream. Litter typically falls in place, and signs of movement are not common unless associated with a perennial flowing stream. Chemical and physical crusts are rare to non-existent.

Recreational Uses

This site provides a variety of hunting and fishing opportunities as well as providing popular camping areas for recreationists when not saturated. Waterfowl hunting opportunities exist when associated with open water. The wide variety of plants which bloom from spring until fall have esthetic values that appeal to visitors.

Wood Products

No appreciable wood products are present on the site.

Other Products

None noted.

Supporting Information

Associated Sites

Similar Sites

Inventory Data References (narrative)

Information presented here has been derived from NRCS clipping data and other inventory data. Field observations from range trained personnel were also used. Other sources used as references include: USDA NRCS Water and Climate Center, USDA NRCS National Range and Pasture Handbook, and USDA NRCS Soil Surveys from various counties.

Inventory Data References

Data Source	Number of Records	Sample Period	State	County
SCS-RANGE-417	69	1967-1988	WY	Carbon & others

State Correlation

Type Locality

Field Offices

Baggs, Casper, Lander, Laramie, Medicine Bow, Riverton, Saratoga

Relationship to Other Established Classifications

Other References

Site Description Approval

State Range Management Specialist

Date