United States Department of Agriculture
Natural Resources Conservation Service

Ecological Site Description

Site Type: Rangeland

Site Name: Rocky Hills (RH) 15-19" Precipitation Zone

Site ID: R049XA134WY

Major Land Resource Area: 49XA - Southern Rocky Mountain Foothills, northern part

Physiographic Features
This site occurs on nearly level to steeply sloping uplands.

Landform: Hill slopes and alluvial fans **Aspect:** N/A

	Minimum	Maximum
Elevation (feet):	6500	8500
Slope (percent):	0	50
Water Table Depth (inches):	None within 60 inches	
Flooding:		
Frequency:	None	None
Duration:	None	None
Ponding:		
Depth (inches):	0	0
Frequency:	None	None
Duration:	None	None
Runoff Class:	slow	rapid

Climatic features

Annual precipitation ranges from 15-19 inches per year. Wide fluctuations may occur in yearly precipitation and result in more dry years than those with more than normal precipitation. Temperatures show a wide range between summer and winter and between daily maximums and minimums. This is predominantly due to the high elevation and dry air, which permits rapid incoming and outgoing radiation. Cold air outbreaks in winter move rapidly from northwest to southeast and account for extreme minimum temperatures. Extreme storms may occur during the winter, but most severely affect ranch operations during late winter and spring.

Prevailing winds are from the southwest and strong winds are less frequent than over other areas of Wyoming. Occasional storms, however, can bring brief periods of high winds with gusts exceeding 50 mph.

Growth of native cool season plants begins about May 1 and continues to about August 1.

The following information is from the "Hecla 1E" climate station:

	Minimum	Maximum	5 yrs. out of 10 between
Frost-free period (days):	93	151	May 20 – September 14
Freeze-free period (days):	106	184	May 9 – September 26
Annual Precipitation (inches):	9.56	24.23	

Mean annual precipitation: 16.04 inches
Mean annual air temperature: 44.7°F (32.1°F Avg. Min. to 57.2°F Avg. Max.)
For detailed information visit the Natural Resources Conservation Service National Water and Climate Center at http://www.wcc.nrcs.usda.gov/ website. Other climate station(s) representative of this precipitation zone include "Glenrock 14 SSE", "Foxpark" and "Horse Creek 2 NW".

Influencing Water Features

Wetland Description:	System	Subsystem	Class	Sub-class
None	None	None	None	None

Stream Type: None (Rosgen System)

REPRESENTATIVE SOIL FEATURES:

The soils of this site are shallow to very deep and well drained. They formed on alluvium, colluvium and residuum and have moderate permeability.

Major soil series correlated to this site:

Other series correlated to this site:
Parent Material Kind: Alluvium, colluvium and residuum
Parent Material Origin: Calcareous sandstone and shale
Surface Texture: Loam, clay loam
Surface Texture Modifier: Cobbly, very channery, extremely channery
Subsurface Texture Group: Loam, clay loam
Surface Fragments <3"(% cover): 10 to 40
Surface Fragments >3"(% cover): 10 to 40
Subsurface <3"(% volume): 10 to 60
Subsurface >3"(% volume):10 to 60

	Minimum	Maximum
DRAINAGE CLASS:	well drained	well drained
PERMEABILITY CLASS:	moderate	moderately rapid
DEPTH: (inches)	<20	>60
EC: (mmhos/cm) <20"	0	2
SAR: <20"	0	3
SOIL REACTION(1:1 WATER) <20"	6.6	8.4
AWC: (inches)	0.7	1.0
CALCIUM CARB EQUIV(%) < 20"	0	35

Plant Communities

Ecological Dynamics of the Site:

As this site begins to deteriorate from a combination of frequent and severe grazing during the growing season, grasses such as bluebunch wheatgrass and spike fescue will decrease in both frequency and production. Grasses such as Fendler's threeawn, Sandberg bluegrass and threadleaf sedge will increase. Under continued frequent and severe defoliation, with no rest periods, rhizomatous wheatgrasses and needleandthread will also begin to decrease. If continued, the plant community will become sparsely vegetated, and all mid to tall grasses can eventually be removed from the plant community. Continuous use in combination with high stock densities will result in areas of excessive bare ground and species such as cheatgrass, Japanese brome, pepperweed and broom snakeweed invading. Lack of fire on this site will cause the mountainmahogany to become decadent and the crude protein levels of the plant will drop. If this occurs, the stands of mountainmahogany will not provide adequate winter-feed for wildlife, such as mule deer and elk.

The historic climax plant community (description follows the State and Transition Model Diagram) has been determined by study of rangeland relic areas, or areas protected from excessive disturbance. Trends in plant communities going from heavily grazed areas to lightly grazed areas, seasonal use pastures, and historical accounts have also been used.

The following is a State and Transition Model Diagram that illustrates the common plant communities that can occur on the site and the transitions between these communities. The ecological processes will be discussed in more detail in the plant community narratives following the diagram.

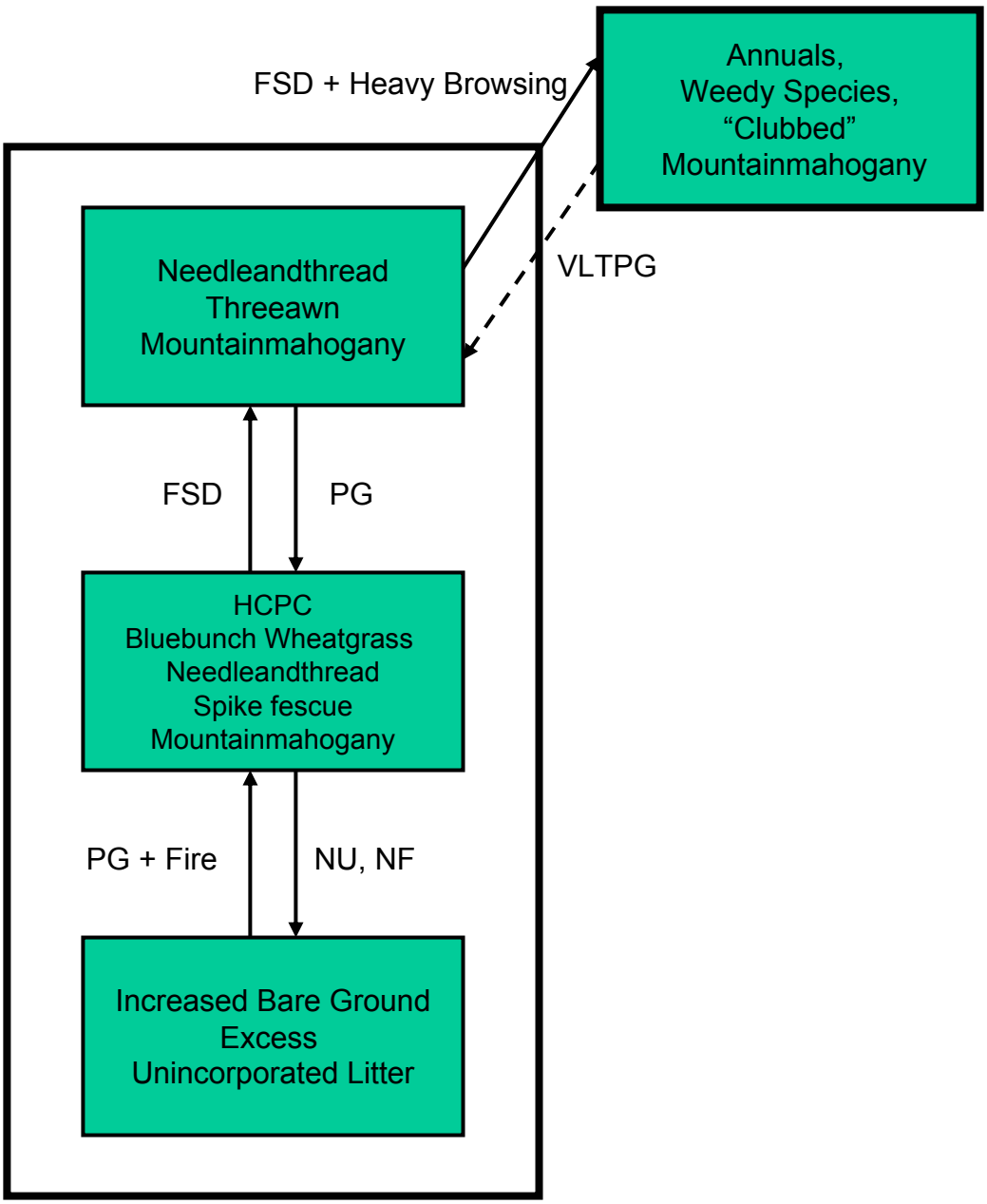

FSD - Frequent and Severe Defoliation
HCPC - Historic Climax Plant Community
PG - Prescribed Grazing (proper stocking rates with adequate recovery periods during the growing season.)
VLTPG - Very Long-term Prescribed Grazing
NU, NF - No Use, No Fire.

Plant Community Composition and Group Annual Production

Reference Plant Community (HCPC)

COMMON NAME/GROUP NAME	SCIENTIFIC NAME	SYMBOL	Annual Production (Normal Year) Total: 900		
			Group	lbs./acre	% Comp.
GRASSES AND GRASS-LIKES					
GRASSES/GRASSLIKES			**1**	**225 - 630**	**25 - 70**
bluebunch wheatgrass	Pseudoroegneria spicata	PSSP6	1	135 - 270	15 - 30
needleandthread	Hesperostipa comata	HECO26	1	90 - 180	10 - 20
spike fescue	Leucopoa kingii	LEKI2	1	90 - 180	10 - 20
MISC. GRASSES/GRASSLIKES			**2**	**90 - 180**	**10 - 20**
Canby bluegrass	Poa canbyi (syn. P. secunda)	POCA (POSE)	2	0 - 45	0 - 5
Fendler's threeawn	Aristida purpurea var. fendleriana	ARPUF	2	0 - 45	0 - 5
Indian ricegrass	Achnatherum hymenoides	ACHY	2	0 - 45	0 - 5
mountain muhly	Muhlenbergia montana	MUMO	2	0 - 45	0 - 5
prairie junegrass	Koeleria macrantha	KOMA	2	0 - 45	0 - 5
Sandberg bluegrass	Poa secunda	POSE	2	0 - 45	0 - 5
threadleaf sedge	Carex filifolia	CAFI	2	0 - 45	0 - 5
western wheatgrass	Pascopyrum smithii	PASM	2	0 - 45	0 - 5
other perennial grasses (native)		2GP	2	0 - 45	0 - 5
FORBS			**3**	**90 - 180**	**10 - 20**
buckwheats	Eriogonum spp.	ERIOG	3	0 - 45	0 - 5
fleabanes	Erigeron spp.	ERIGE2	3	0 - 45	0 - 5
fringed sagewort	Artemisia frigida	ARFR4	3	0 - 45	0 - 5
Hoods phlox	Phlox hoodii	PHHO	3	0 - 45	0 - 5
milkvetches	Astragalus	ASTRA	3	0 - 45	0 - 5
penstemons	Penstemon spp.	PENST	3	0 - 45	0 - 5
western yarrow	Achillea lanulosa	ACHIL	3	0 - 45	0 - 5
other perennial forbs (native)		2FP	3	0 - 45	0 - 5
TREES/SHRUBS					
true mountainmahogany	Cercocarpus montanus	CEMO2	4	180 - 360	20 - 40
antelope bitterbrush	Purshia tridentata	PUTR2	5	9 - 90	1 - 10
juniper	Juniperus scopulorum	JUSC2	6	0 - 45	0 - 5
Ponderosa pine	Pinus ponderosa	PIPO	7	0 - 45	0 - 5
MISC. SHRUBS			**8**	**45 - 135**	**5 - 15**
big sagebrush	Artemisia tridentata	ARTR2	8	0 - 45	0 - 5
black sagebrush	Artemisia nova	ARNO4	8	0 - 45	0 - 5
currant	Ribes spp.	RIBES	8	0 - 45	0 - 5
green rabbitbrush	Chrysothamnus viscidiflorus	CHVI8	8	0 - 45	0 - 5
western snowberry	Symphoricarpos occidentalis	SYOC	8	0 - 45	0 - 5
other perennial shrubs (native)		2SHRUB	8	0 - 45	0 - 5

This list of plants and their relative proportions are based on near normal years. Fluctuations in species composition and relative production may change from year to year dependent upon precipitation or other climatic factors.

Plant Community Narratives

Following are the narratives for each of the described plant communities. These plant communities may not represent every possibility that may occur on a given site, but they probably are the most prevalent and repeatable plant communities. The plant composition table shown above has been developed from the best available knowledge at the time of this revision. As more data is collected, some of these plant communities may be revised or removed, and new ones may be added. None of these plant communities should necessarily be thought of as "Desired Plant Communities". According to the USDA – NRCS National Range and Pasture Handbook, Desired Plant Communities will be determined by the decision-makers and will meet minimum quality criteria established by the NRCS. The main purpose for including any description of a plant community here is to capture the current knowledge and experience at the time of this revision.

Bluebunch Wheatgrass, Needleandthread, Spike fescue, Mountainmahogany Plant Community

This plant community is the interpretive plant community for this site and is considered to be the Historic Climax Plant Community (HCPC). The site evolved with grazing by large herbivores and is suited to grazing by domestic livestock. Historically, fires likely occurred frequently. Suppression of fire in the last 100 years has caused a decrease in the quality of this site for wildlife winter range. This plant community can be found on areas that are grazed and where the grazed plants receive adequate periods of rest during the growing season in order to recover. The potential vegetation is about 55% grasses, 10% forbs, and 45% woody plants. Mid-grasses and woody plants co-dominate the site. The principal grasses are bluebunch wheatgrass, needleandthread and spike fescue. Secondary grasses are Canby bluegrass, Fendler's threeawn and western wheatgrass. Other plants in the community are antelope bitterbrush, currant and western snowberry.

The diversity of plant species allows for high dry tolerance and a sustainable plant community. Soil erosion and runoff is moderate due to texture and topography. Infiltration is moderate because of soil texture and topography. Areas having lost all vegetation, such as livestock and vehicle trails are subject to high erosion rates and extreme runoff.

The total annual production (air-dry weight) of this state is about 900 lbs./acre, but it can range from about 650 lbs./acre in unfavorable years to about 1,150 lbs./acre in above average years.

The following is the growth curve of this plant community expected during a normal year:
Growth curve number:
Growth curve name:
Growth curve description:

JAN	FEB	MAR	APR	MAY	JUN	JUL	AUG	SEP	OCT	NOV	DEC
0	0	0	5	20	45	20	5	5	0	0	0

(Monthly percentages of total annual growth)

Transitions or pathways leading to other plant communities are as follows:

- Frequent and severe defoliation of mid-grasses will move this plant community to the *Needleandthread, Threeawn, Mountainmahogany Plant Community***.** The highly palatable plants are removed causing a decrease in diversity and productivity.

- No Use and No Fire will move this plant community to the *Increased Bare Ground, Excess Unincorporated Litter Plant Community***.** Lack of use causes the plants to become less vigorous, crowns of plants begin to die, and plant canopy begins to open up with more bare ground apparent.

Needleandthread, Threeawn, Mountainmahogany Plant Community
This plant community developed with frequent and severe defoliation during the growing season. The dominant grasses include needleandthread and Fendler's threeawn. Threadleaf sedge and Sandberg bluegrass begin to increase. Bluebunch wheatgrass is still present as a secondary grass in the community. Significant forbs include phlox, buckwheats, and western yarrow. The dominant shrub is mountainmahogany. Other plants are fringed sagewort and pricklypear cactus. Compared to HCPC, bluebunch wheatgrass and spike fescue have decreased. Needleandthread, Fendler's threeawn and undesirable forbs have increased.

Management changes cannot easily move this plant community toward HCPC. Soil erosion is moderate. Infiltration is minimal because runoff is high. Areas that are devoid of vegetation are subject to extreme erosion and runoff.

The total annual production (air-dry weight) is about 700 pounds per acre during an average year, but it can range from about 550 pounds per acre in unfavorable years to about 850 pounds per acre in above average years.

The following is the growth curve of this plant community expected during a normal year:
Growth curve number:
Growth curve name:
Growth curve description:

JAN	FEB	MAR	APR	MAY	JUN	JUL	AUG	SEP	OCT	NOV	DEC
0	0	0	5	20	45	20	5	5	0	0	0

(Monthly percentages of total annual growth)

Transitions or pathways leading to other plant communities are as follows:

- Frequent and severe defoliation of mid-grasses + heavy browsing of mountainmahogany will move this plant community to the *Annuals, Weedy Species, and "Clubbed" Mountainmahogany Plant Community*. Weedy species are starting to invade, and almost all mid-grasses are removed resulting in a decrease in palatable forage. Fire has been removed and shrubs are becoming decadent.

- Prescribed Grazing will shift this plant community towards the *Bluebunch Wheatgrass, Needleandthread, Spike fescue, Mountainmahogany Plant Community (HCPC)***.** The advantage of having this plant community at HCPC is increased desirable plant diversity, production and soil organic matter.

Increased Bare Ground, Excess Unincorporated Litter Plant Community
This plant community developed under many years with no defoliation and no fire. Plant litter accumulates in large amounts when this community first develops. Eventually, litter levels become high enough to crowd out plants and more of the area becomes bare ground. Bunchgrasses develop dead centers and rhizomatous wheatgrasses form small communities because of a lack of stimulation by grazers. The dominant grasses/grasslikes include needleandthread, Fendler's threeawn and western wheatgrass. Compared to the HCPC bluebunch wheatgrass, spike fescue, and perennial forbs have

decreased and noxious weeds have started to invade. The lack of fire causes the mountainmahogany to become decadent and crude protein levels to decrease.

Management changes can easily shift this plant community. Soil erosion is low when the surface litter is high, but increases when the litter disappears. Areas that are devoid of vegetation are subject to high erosion by wind and water.

The total annual production (air-dry weight) is about 750 pounds per acre during an average year, but it can range from about 600 pounds per acre in unfavorable years to about 900 pounds per acre in above average years.

The following is the growth curve of this plant community expected during a normal year:
Growth curve number:
Growth curve name:
Growth curve description:

JAN	FEB	MAR	APR	MAY	JUN	JUL	AUG	SEP	OCT	NOV	DEC
0	0	0	5	20	45	20	5	5	0	0	0

(Monthly percentages of total annual growth)

Transitions or pathways leading to other plant communities are as follows:

- Prescribed Grazing + Fire will shift this plant community towards the *Bluebunch Wheatgrass, Needleandthread, Spike fescue, Mountainmahogany Plant Community (HCPC)***.** The advantage of having this Plant Community at HCPC is increased desirable plant diversity, production, plant vigor and soil organic matter.

Annuals, Weedy Species, "Clubbed' Mountainmahogany Plant Community
This plant community developed under frequent and severe defoliation during the growing season. The dominant grasses include mountainmahogany, annual grasses such as cheatgrass and Japanese brome, annual forbs and other weedy species. At this time the plant community is highly prone to invasion by noxious weeds. Mid-grasses have been almost completely removed from the understory. The dominant forbs are western yarrow, phlox, and broom snakeweed. Other plants are fringed sagewort and pricklypear cactus. Compared to HCPC, nearly all mid-grasses are gone and weedy species have invaded the area. Undesirable grasses, forbs and other plants have increased.

Management changes cannot easily move this plant community toward HCPC. Soil erosion is severe. Infiltration is minimal because runoff is high. Areas that are devoid of vegetation are subject to extreme erosion and runoff.

The total annual production (air-dry weight) is about 400 pounds per acre during an average year, but it can range from about 300 pounds per acre in unfavorable years to about 500 pounds per acre in above average years.

The following is the growth curve of this plant community expected during a normal year:
Growth curve number:
Growth curve name:
Growth curve description:

JAN	FEB	MAR	APR	MAY	JUN	JUL	AUG	SEP	OCT	NOV	DEC
0	0	0	5	20	45	20	5	5	0	0	0

(Monthly percentages of total annual growth)

Transitions or pathways leading to other plant communities are as follows:

- Very Long Term Prescribed Grazing will move this plant community towards the *Needleandthread, Threeawn, Mountainmahogany Plant Community***.** Moving towards HCPC will increase production, desirable plant diversity and reduce soil erosion.

Ecological Site Interpretations

Animal Community – Wildlife Interpretations

Bluebunch wheatgrass, Needleandthread, Spike fescue, Mountainmahogany Community (HCPC): The predominance of high grass and forb diversity plus mountainmahogany in this community favors large browsers and grazers such as deer and elk. The shrub cover provides suitable thermal and escape cover for mule deer. White-tailed and black-tailed jackrabbit, badger, and coyote commonly use this community. This community also provides habitat for a wide array of smaller mammals, so diverse prey populations are available for raptors such as ferruginous and Swainson's hawks. Birds such as western kingbird, western meadowlark, lark bunting, and grasshopper sparrow will utilize this community for nesting and foraging. This community is especially favorable for ground-nesting birds because of the abundant residual vegetation available in the spring for nesting, escape and thermal cover.

Needleandthread, Threeawn, Mountainmahogany Community: The reduction in taller grasses in this community results in decreased use by lark buntings and western meadowlarks. Killdeer, horned larks, and McCown's longspurs will also make significant use of this community. Mule deer forage in this community.

Increased Bare Ground, Excess Unincorporated Litter Community: This community provides foraging for deer and other browsers. Ground-nesting birds favoring sparse vegetation may use this community. Generally, this is not a target vegetative community for wildlife habitat management.

Annuals, Weedy Species, "Clubbed" Mountainmahogany Community: Sparse vegetation and greater amounts of bare ground provide suitable habitat for horned larks and McCown's longspurs. However, a lack of complex vegetation structure and residual cover makes this community poor habitat in general for most ground nesting birds and big game species. Deer and elk may find limited forage in this community.

Animal Preferences (Quarterly - 1,2,3,4) for commonly occuring plants in MLRA 49XA, 15-19 inch Foothills & Mtns. Southeast

COMMON NAME/	SCIENTIFIC NAME	SCI. SYMBOL	*Cattle*	*Sheep*	*Horses*	*Mule Deer*	*Antelope*
GRASSES/GRASSLIKES							
Baltic rush	Juncus balticus	JUBA	DDDD	UUUU	DDDD	UUUU	UUUU
basin wildrye	Leymus cinereus	LECI4	PPPP	PPPP	PPPP	DDDD	DDDD
big bluegrass	Poa ampla (syn. to Poa secunda)	POAM (POSE)	PPPP	PPPP	PPPP	DDDD	DDDD
blue grama	Bouteloua gracilis	BOGR2	DDDD	DDDD	DDDD	DDDD	DDDD
bluebunch wheatgrass	Pseudoroegneria spicata	PSSP6	PPPP	PPPP	PPPP	DDDD	DDDD
bluejoint reedgrass	Calamagrostis canadensis	CACA4	PPPP	DDDD	PPPP	UUUU	UUUU
Canada wildrye	Elymus canadensis	ELCA4	PPPP	PPPP	PPPP	DDDD	DDDD
Canby bluegrass	Poa canbyi (syn. to Poa secunda)	POCA (POSE)	PPPP	PPPP	PPPP	PPPP	PPPP
Columbia needlegrass	Achnatherum nelsonii	ACNE3	PPPP	PPPP	DDDD	DDDD	DDDD
Fendler's threeawn	Aristida purpurea var. fendleriana	ARPUF	UUUU	UUUU	UUUU	UUUU	UUUU
golden sedge	Carex aurea	CAAU3	DDDD	DDDD	DDDD	UUUU	UUUU
Idaho fescue	Festuca idahoensis	FEID	PPPP	PPPP	PPPP	PPPP	PPPP
Indian ricegrass	Achnatherum hymenoides	ACHY	PPPP	PPPP	PPPP	PPPP	PPPP
Letterman needlegrass	Achnatherum lettermanii	ACLE9	PPPP	PPPP	DDDD	DDDD	DDDD
mat muhly	Muhlenbergia richardsonis	MURI	UUUU	UUUU	UUUU	UUUU	UUUU
Montana wheatgrass	Elymus albicans	ELAL7	DDDD	DDDD	DDDD	DDDD	DDDD
mountain brome	Bromus marginatus	BRMA4	PPPP	PPPP	DDDD	DDDD	UUUU
mountain muhly	Muhlenbergia montana	MUMO	DDDD	DDDD	DDDD	DDDD	UUUU
muttongrass	Poa fendleriana	POFE	PPPP	PPPP	PPPP	PPPP	PPPP
Nebraska sedge	Carex nebraskensis	CANE2	PPPP	PPPP	PPPP	DDDD	DDDD
needleandthread	Hesperostipa comata	HECO26	PPPP	PPPP	PPPP	PPPP	PPPP
nodding brome	Bromus anomalus (syn. B. porteri)	BRAN13 (BRPO2)	PPPP	PPPP	DDDD	DDDD	UUUU
northern reedgrass	Calamagrostis stricta	CAST13	PPPP	DDDD	PPPP	UUUU	UUUU
onespike oatgrass	Danthonia unispicata	DAUN	DDDD	PPPP	DDDD	PPPP	DDDD
Parry's oatgrass	Danthonia parryii	DAPA2	DDDD	PPPP	DDDD	DDDD	DDDD
plains reedgrass	Calamagrostis montanensis	CAMO	DDDD	DDDD	DDDD	DDDD	DDDD
prairie junegrass	Koeleria macrantha	KOMA	DDDD	DDDD	DDDD	DDDD	DDDD
Sandberg bluegrass	Poa secunda	POSE	DDDD	DDDD	DDDD	DDDD	DDDD
slender wheatgrass	Elymus trachycaulus	ELTR7	PPPP	DDDD	PPPP	DDDD	DDDD
slimstem muhly	Muhlenbergia filiculmis	MUFI	DDDD	DDDD	DDDD	UUUU	UUUU
slough sedge	Carex atherodes	CAAT2	DDDD	DDDD	DDDD	DDDD	DDDD
spike fescue	Leucopoa kingii	LEKI2	PPPP	DDDD	PPPP	PPPP	DDDD
spike sedge	Carex nardina	CANA2	DDDD	DDDD	DDDD	UUUU	UUUU
spike trisetum	Trisetum spicatum	TRSP2	PPPP	DDDD	PPPP	PPPP	DDDD
squirreltail	Elymus elymoides	ELELE	DDDD	DDDD	DDDD	UUUU	UUUU
tall mannagrass	Glyceria elata (syn. G. striata)	GLEL (GLST)	DDDD	UUUU	DDDD	UUUU	UUUU
threadleaf sedge	Carex filifolia	CAFI	DDDD	DDDD	DDDD	DDDD	PPPP
tufted hairgrass	Deschampsia caespitosa	DECA18	PPPP	PPPP	PPPP	DDDD	DDDD
western wheatgrass	Pascopyrum smithii	PASM	DDDD	DDDD	DDDD	DDDD	DDDD
FORBS							
American bistort	Polygonum bistortoides	POBI6	DDDD	DDDD	DDDD	DDDD	DDDD
arrowgrass	Triglochin spp.	TRIGL	T	T	T	T	T
biscuitroots	Lomatium spp.	LOMAT	DDDD	DDDD	UUUU	DDDD	DDDD
blue-eyed grass	Sisyrinchium spp.	SISYR	DDDD	PPPP	DDDD	DDDD	DDDD
buckwheats	Eriogonum spp.	ERIOG	UUUU	UUUU	UUUU	UUUU	UUUU
cinquefoils, herbaceous	Potentilla spp.	POTEN	UUUU	UUUU	UUUU	UUUU	UUUU
clovers	Trifolium spp.	TRIFO	PPPP	PPPP	PPPP	PPPP	PPPP
cudweed sagewort	Artemisia ludoviciana	ARLU	UUUU	UUUU	UUUU	UUUU	UUUU
fleabanes	Erigeron spp.	ERIGE2	DDDD	DDDD	DDDD	DDDD	DDDD
fringed sagewort	Artemisia frigida	ARFR4	UUUU	UUUU	UUUU	UUUU	UUUU
hairy goldenaster	Heterotheca villosa	HEVI4	UUUU	UUUU	UUUU	UUUU	UUUU
hawksbeard	Crepis acuminata	CRAC2	UUUU	PPPP	UUUU	DDDD	DDDD
Hoods phlox	Phlox hoodii	PHHO	UUUU	UUUU	UUUU	UUUU	UUUU
horsetails	Equisetum spp.	EQUIS	UUUU	UUUU	UUUU	UUUU	UUUU
iris	Iris spp.	IRIS	UUUU	UUUU	UUUU	UUUU	UUUU
larkspurs	Delphinium spp.	DELPH	T	T	T	T	T
lupines (toxic at certain times)	Lupinus spp.	LUPIN	DDDD	DDDD	DDDD	DDDD	DDDD
milkvetches	Astragalus	ASTRA	DDDD	DDDD	DDDD	DDDD	DDDD
paintbrushes	Castilleja spp.	CAST	DDDD	DDDD	DDDD	DDDD	DDDD
penstemons	Penstemon spp.	PENST	PPPP	PPPP	PPPP	PPPP	PPPP
rosy pussytoes	Antennaria rosea	ANRO2	UUUU	UUUU	UUUU	UUUU	UUUU
scarlet globemallow	Sphaeralcea coccinea	SPCO	DDDD	DDDD	DDDD	DDDD	DDDD
stonecrop	Sedum spp.	SEDUM	UUUU	UUUU	UUUU	UUUU	UUUU
violets	Viola spp.	VIOLA	DDDD	DDDD	DDDD	DDDD	DDDD
water hemlocks	Cicuta spp.	CICUT	T	T	T	T	T
waterleaf	Hydrophyllum	HYDRO4	DDDD	PPPP	DDDD	PPPP	DDDD
western yarrow	Achillea lanulosa	ACHIL	UUUU	UUUU	UUUU	UUUU	UUUU
TREES, SHRUBS & HALF-SHRUBS							
Antelope bitterbrush	Purshia tridentata	PUTR2	PPPP	PPPP	DDDD	PPPP	PPPP
big sagebrush	Artemisia tridentata	ARTR2	UUUU	DDDD	UUUU	DDDD	DDDD
black sagebrush	Artemisia nova	ARNO4	UUUU	PPPP	UUUU	PPPP	PPPP
bog kalmia	Kalmia microphylla	KAMI	T	T	T	T	T
currant	Ribes spp.	RIBES	DDDD	DDDD	DDDD	PPPP	DDDD
junipers	Juniperus scopulorum	JUSC2	UUUU	UUUU	UUUU	DDDD	UUUU
green rabbitbrush	Chrysothamnus viscidiflorus	CHVI8	DDDD	DDDD	DDDD	DDDD	DDDD
ponderosa pine (abortion in cattle)	Pinus ponderosa	PIPO	UUUU	UUUU	UUUU	UUUU	UUUU
rubber rabbitbrush	Ericameria nauseosa	ERNA10	UUUU	DDDD	UUUU	DDDD	DDDD
serviceberry	Amelanchier alnifolia	AMAL2	DDDD	PPPP	DDDD	PPPP	DDDD
shrubby cinquefoil	Dasiphora floribunda	DAFL3	UUUU	UUUU	UUUU	UUUU	UUUU
silver sagebrush	Artemisia cana	ARCAC5	DDDD	DDDD	DDDD	PPPP	PPPP
snowbrush ceanothus	Ceanothus velutinus	CEVE	PPPP	DDDD	DDDD	DDDD	UUUU
threetip sagebrush	Artemisia tripartita	ARTR4	UUUU	DDDD	UUUU	UUUU	DDDD
true mountainmahogany	Cercocarpus montanus	CEMO2	DDDD	PPPP	DDDD	PPPP	DDDD
water birch	Betula occidentalis	BEOC2	UUUU	UUUU	UUUU	UUUU	UUUU
western snowberry	Symphoricarpos occidentalis	SYOC	UUUU	UUUU	UUUU	DDDD	UUUU
wildrose	Rosa woodsii var. woodsii	ROWOW	DDDD	DDDD	UUUU	DDDD	DDDD
willows	Salix L.	SALIX	PPPP	PPPP	DDDD	PPPP	UUUU
winterfat	Krascheninnikovia lanata	KRLA2	PPPP	PPPP	PPPP	PPPP	PPPP

N = not used; U = undesirable; D = desirable; P = preferred; T = toxic

Animal Community – Grazing Interpretations

The following tables list suggested initial stocking rates for cattle under continuous grazing (year long grazing or growing season long grazing) under normal growing conditions; however, *continuous grazing is not typically recommended.* These are conservative estimates that should be used only as guidelines in the initial stages of the conservation planning process. Often, the current plant composition does not entirely match any particular plant community as described in this ecological site description. Because of this, a field visit is recommended, in all cases, to document plant composition and production. More precise carrying capacity estimates should eventually be calculated using the following stocking rate information along with animal preference data, particularly when grazers other than cattle are involved. Under more intensive grazing management, improved harvest efficiencies can result in an increased carrying capacity.

Plant Community	Production (lbs./acre)	Carrying Capacity (AUM/acre)
Bluebunch, Needleandthread, Spike fescue, Mountainmahogany	900	0.3
Needleandthread, Threeawn, Mountainmahogany	700	0.2
Increased Bare Ground, Excess Unincorporated Litter	750	0.25
Annuals, Weedy Species, "Clubbed" Mountainmahogany	400	0.15

Grazing by domestic livestock is one of the major income-producing industries in the area. Rangelands in this area provide yearlong forage under prescribed grazing for cattle, sheep, horses and other herbivores. During the dormant period, livestock may need supplementation based on reliable forage analysis.

Hydrology Functions

Water is the principal factor limiting forage production on this site. This site is dominated by soils in hydrologic group B and C, with localized areas in hydrologic group D. Infiltration ranges from moderately slow to moderate. Runoff potential for this site varies from moderate to moderately high depending on soil hydrologic group and ground cover. In many cases, areas with greater than 75% ground cover have the greatest potential for high infiltration and lower runoff. An example of an exception would be where short-grasses form a strong sod and dominate the site. Areas where ground cover is less than 50% have the greatest potential to have reduced infiltration and higher runoff (refer to Part 630, NRCS National Engineering Handbook for detailed hydrology information).

Rills and gullies should not typically be present. Water flow patterns should be barely distinguishable if at all present. Pedestals are only slightly present in association with bunchgrasses. Litter typically falls in place, and signs of movement are not common. Chemical and physical crusts are rare to non-existent. Cryptogamic crusts are present, but only cover 1-2% of the soil surface.

Recreational Uses

This site provides hunting, hiking, photography, bird watching and other opportunities. The wide varieties of plants that bloom from spring until fall have an esthetic value that appeals to visitors.

Wood Products

No appreciable wood products are present on the site.

Other Products

None noted.

Supporting Information

Associated Sites

(R049XA162WY) – Shallow Loamy 15-19 " P.Z.
(R049XA122WY) – Loamy 15-19" P.Z.
(R049XA176WY) – Very Shallow 15-19" P.Z.

Similar Sites

(R049XA122WY) – Loamy 15-19" P.Z. is more productive
(R049XA162WY) – Shallow Loamy 15-19" P.Z. has far less mountainmahogany
(R049XA176WY) – Very Shallow 15-19" P.Z. has far less mountainmahogany and less production

Inventory Data References (narrative)

Information presented here has been derived from NRCS clipping data and other inventory data. Field observations from range trained personnel were also used.

Inventory Data References

Data Source	Number of Records	Sample Period	State	County
SCS-RANGE-417	24	1963 -1987	WY	Albany & others

State Correlation

This site occurs entirely within Wyoming.

Type Locality

Field Offices

Wyoming: Baggs, Casper, Cheyenne, Douglas, Lander, Laramie, Riverton, Saratoga, and Wheatland

Relationship to Other Established Classifications

Other References

Other sources used as references include: High Plains Regional Climate Center, USDA NRCS Water and Climate Center, USDA NRCS National Range and Pasture Handbook, and USDA NRCS Soil Surveys from various counties.

Site Description Approval

_____ _____
State Range Management Specialist Date

Ecological Reference Worksheet

Author(s)/participant(s):_____

Contact for lead author: _____ **Reference site used? Yes/No**

Date: __3/05_ ___ **MLRA:** _ __49_ **Ecological Site:** R049XA134WY Rocky Hills (RH)

__ This *must* be verified based on soils and climate (see Ecological Site Description). Current plant community *cannot* be used to identify the ecological site.

Indicators. For each indicator, describe the potential for the site. Where possible, (1) use numbers, (2) include expected range of values for above- and below-average years for **each** community within the reference state, when appropriate & (3) cite data. Continue descriptions on separate sheet.
1. Number and extent of rills: Rills should not be present
2. Presence of water flow patterns: Barely observable
3. Number and height of erosional pedestals or terracettes: Essentially non-existent
4. Bare ground from Ecological Site Description or other studies (rock, litter, lichen, moss, plant canopy are *not* bare ground): Bare ground is 40-60% occurring in small areas throughout site
5. Number of gullies and erosion associated with gullies: Active gullies should be restricted to areas of concentrated water flow patterns on steeper slopes
6. Extent of wind scoured, blowouts and/or depositional areas: Small scoured sites may be observed
7. Amount of litter movement (describe size and distance expected to travel): Litter movement is little to none based on topography and water flow patterns
8. Soil surface (top few mm) resistance to erosion (stability values are averages – most sites will show a range of values for both plant canopy and interspaces, if different): Plant cover and litter is at 50% or greater of soil surface and maintains soil surface integrity. Soil Stability class is anticipated to be 4 or greater.
9. Soil surface structure and SOM content (include type and strength of structure, and A-horizon color and thickness for both plant canopy and interspaces, if different): Use Soil Series description for depth and color of A-horizon
10. Effect of plant community composition (relative proportion of different functional groups) & spatial distribution on infiltration & runoff: Grass canopy and basal cover should reduce raindrop impact and slow overland flow providing increased time for infiltration to occur. Infiltration is moderate.
11. Presence and thickness of compaction layer (usually none; describe soil profile features which may be mistaken for compaction on this site): No compaction layer or soil surface crusting should be present.
12. Functional/Structural Groups (list in order of descending dominance by above-ground weight using symbols: >>, >, = to indicate much greater than, greater than, and equal to): Mid stature Cool Season Bunch Grasses > Shrubs >Forbs
13. Amount of plant mortality and decadence (include which functional groups are expected to show mortality or decadence): Very Low
14. Average percent litter cover and depth : Average litter cover is 15-25% with depths of 0.25 to 0.5 inches
15. Expected annual production (this is all above-ground production, not just forage production): 900 lbs/ac
16. Potential invasive (including noxious) species (native and non-native). List species which characterize degraded states and which, after a threshold is crossed, "can, and often do, continue to increase regardless of the management of the site and may eventually dominate the site": Threadleaf sedge, Sandberg bluegrass, Threeawns, Broom snakeweed, Species found on Noxious Weed List
17. Perennial plant reproductive capability: All species are capable of reproducing