United States Department of Agriculture
Natural Resources Conservation Service

Ecological Site Description

Site Type: Rangeland

Site Name: Shallow Igneous (Swl), 20”+ P.Z., High Mountains

Site ID: R043BY160WY

Major Land Resource Area: 43B-Central Rocky Mountains

Physiographic Features
This site is found on rolling to steep mountain slopes and ridges.

Landform: hill sides, ridges & escarpments **Aspect:** commonly S and W

	Minimum	Maximum	
Elevation (feet):	6500	>12,000	
Slope (percent):	5	70	(mostly 15-30%)
Water Table Depth (inches):	none within 60 inches		
Flooding:			
Frequency:	none	none	
Duration:	none	none	
Ponding:			
Depth (inches):	0	0	
Frequency:	none	none	
Duration:	none	none	
Runoff Class:	negligible	high	

Climatic Features
Annual precipitation is fairly evenly distributed through the year and averages over 20 inches. Snows are heavy and usually remain in place during the winter. Annual snowfall averages 150 to 200 inches per year. Wide fluctuations may occur in yearly precipitation and result in more dry years than those with more than normal precipitation. Temperatures show a wide range between summer and winter and between daily maximums and minimums. This is predominantly due to the high elevation and dry air, which permits rapid incoming and outgoing radiation. Cold air outbreaks in winter move rapidly from northwest to southeast and account for extreme minimum temperatures.

Prevailing winds are from the southwest, and strong winds are less frequent than over other areas of Wyoming. Occasional storms, however, can bring brief periods of high winds with gusts exceeding 50 mph.

Growth of native cool season plants begins about June 1 at lower elevations, as late as July 15 at higher elevations, and continues until the beginning of September.

The following information is from the “Moran 5 WNW” climate station:

	Minimum	Maximum	5 yrs. out of 10 between
Frost-free period (days):	31	78	June 30 – August 24
Freeze-free period (days):	65	118	June 5 – September 9

Annual Precipitation (inches): <20.78 >29.35 (2 years in 10)

Mean annual precipitation: 25.23 inches

Mean annual air temperature: 36.5°F (22.1°F Avg. Min. to 50.9°F Avg. Max.)

For detailed information visit the Natural Resources Conservation Service National Water and Climate Center at http://www.wcc.nrcs.usda.gov/cgibin/state.pl?state=wy website. Other climate station representative of this precipitation zone include "Alta 1 NW", "Lake Yellowstone", "Moose", "Old Faithful", and "Snake River" in Teton County; "Bedford 3 SE" in Lincoln County; and "Bondurant" in Sublette County.

Influencing Water Features

Wetland Description:	System	Subsystem	Class	Sub-class
None	None	None	None	None

Stream Type: None

Representative Soil Features

These are shallow (10-20"), well-drained soils with medium to moderately coarse textures over igneous or volcanic bedrock. This site may also include some deep gravelly and/or cobbly soils on south and west facing slopes which react like shallow soils.

Major Soil Series correlated to this site include:

Parent Material Kind: residuum, colluvium
Parent Material Origin: granite, schist
Surface Texture: loam, sandy loam
Surface Texture Modifier: gravelly, cobbly, and very cobbly
Subsurface Texture Group: very cobbly sandy loam
Surface Fragments ≤ 3" (% Cover): 10 to 25
Surface Fragments > 3" (%Cover): 20 to 45
Subsurface Fragments ≤ 3" (% Volume): 15-30
Subsurface Fragments > 3" (% Volume): 30-50

	Minimum	Maximum
Drainage Class:	well	somewhat excessive
Permeability Class:	moderate	moderately rapid
Depth (inches):	10	20
Electrical Conductivity (mmhos/cm) ≤20":	0	0
Sodium Absorption Ratio ≤20":	0	0
Soil Reaction (1:1 Water) ≤20":	5.6	7.2
Soil Reaction (0.1M CaCl2) ≤20":	NA	NA
Available Water Capacity (inches) ≤30":	0.6	1.2
Calcium Carbonate Equivalent (percent) ≤20":	0	0

Plant Communities

Ecological Dynamics of the Site:

As this site deteriorates, species such as rhizomatous wheatgrass, bottlebrush squirreltail, three-tip and mountain big sagebrush, and snowberry will increase. Bluebunch wheatgrass, spike fescue, and bitterbrush will decrease in frequency and production.

The Historic Climax Plant Community (description follows the plant community diagram) has been determined by study of rangeland relic areas, or areas protected from excessive disturbance. Trends in plant communities going from heavily grazed areas to lightly grazed areas, seasonal use pastures, and historical accounts have also been used.

The following is a State and Transition Model Diagram that illustrates the common plant communities (states) that can occur on the site and the transitions between these communities. The ecological processes will be discussed in more detail in the plant community narratives following the diagram.

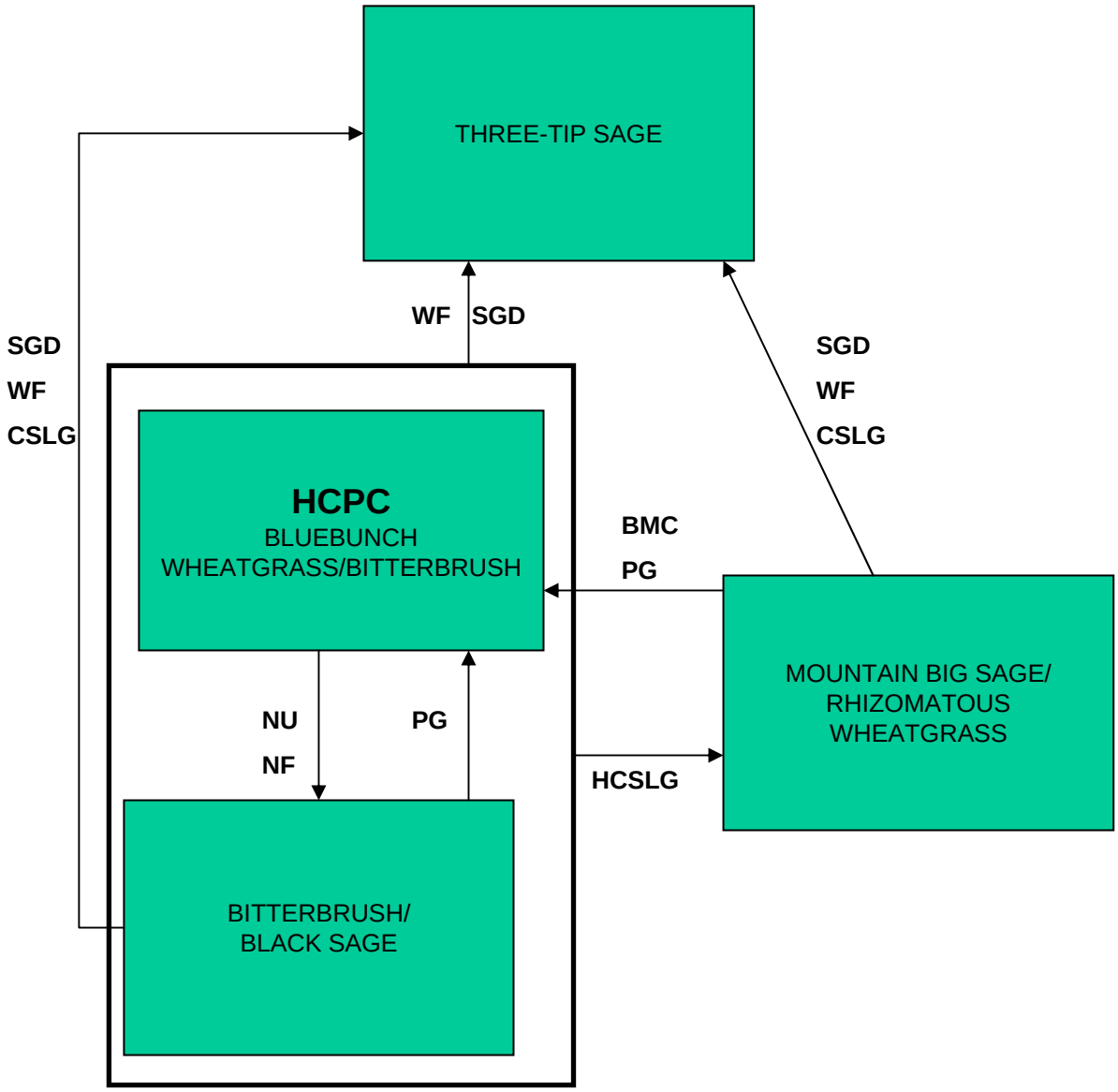

BMA – Brush Management (all methods)
BMC – Brush Management (chemical)
BMF – Brush Management (fire)
BMM – Brush Management (mechanical)
CSP – Chemical Seedbed Preparation
CSLG – Continuous Season-long Grazing
DR – Drainage
CSG – Continuous Spring Grazing
HB – Heavy Browse
HCSLG – Heavy Continuous Season-long Grazing
HI – Heavy Inundation
LPG – Long-term Prescribed Grazing
MT – Mechanical Treatment (chiseling, ripping, pitting)
NF – No Fire
NS – Natural Succession
NWC – Noxious Weed Control
NWI – Noxious Weed Invasion
NU – Nonuse
P&C – Plow & Crop (including hay)
PG – Prescribed Grazing
RPT – Re-plant Trees
RS – Re-seed
SGD – Severe Ground Disturbance
SHC – Severe Hoof Compaction
WD – Wildlife Damage (Beaver)
WF - Wildfire

Plant Community Composition and Group Annual Production
Reference Plant Community (HCPC)

COMMON NAME/GROUP NAME	SCIENTIFIC NAME	SYMBOL	Annual Production (Normal Year) Total: 1500		
			Group	lbs./acre	% Comp.
GRASSES AND GRASS-LIKES					
Bluebunch wheatgrass	Pseudoroegneria spicata	PSSP6	**1**	**525 - 675**	**35 - 45**
Spike fescue	Leucopoa kingii	LEKI2	**2**	**225 - 375**	**15 - 25**
Thickspike wheatgrass	Elymus lanceolatus ssp. lanceolatus	ELLAL	**3**	**75 - 225**	**5 - 15**
MISC. GRASSES/GRASSLIKES			**4**	**150 - 300**	**10 - 20**
Bentgrass	Agrostis spp.	AGROS2	4	0 - 75	0 - 5
Big bluegrass	Poa ampla (syn. P. secunda)	POAM (POSE)	4	0 - 75	0 - 5
Bottlebrush squirreltail	Elymus elymoides ssp. elymoides	ELELE	4	0 - 75	0 - 5
California oatgrass	Danthonia californica	DACA3	4	0 - 75	0 - 5
Canby bluegrass	Poa canbyi (syn. P. secunda)	POCA (POSE)	4	0 - 75	0 - 5
Columbia needlegrass	Achnatherum nelsonii	ACNE9	4	0 - 75	0 - 5
Idaho fescue	Festuca idahoensis	FEID	4	0 - 75	0 - 5
Letterman needlegrass	Achnatherum lettermanii	ACLE9	4	0 - 75	0 - 5
Mountain bromegrass	Bromus marginatus	BRMA4	4	0 - 75	0 - 5
Mountain muhly	Muhlenbergia montana	MUMO	4	0 - 75	0 - 5
Mutton bluegrass	Poa fendleriana	POFE	4	0 - 75	0 - 5
One-spike oatgrass	Danthonia unispicata	DAUN	4	0 - 75	0 - 5
Oniongrass	Melica bulbosa	MEBU	4	0 - 75	0 - 5
Prairie junegrass	Koeleria macrantha	KOMA	4	0 - 75	0 - 5
Spike trisetum	Trisetum spicatum	TRSP2	4	0 - 75	0 - 5
Timber oatgrass	Danthonia intermedia	DAIN	4	0 - 75	0 - 5
Western needlegrass	Achnatherum occidentale	ACOC3	4	0 - 75	0 - 5
other perennial grasses (native)		2GP	4	0 - 75	0 - 5
FORBS			**5**	**75 - 150**	**5 - 10**
American vetch	Vicia americana	VIAM	5	0 - 75	0 - 5
Aster	Symphyotrichum/Eucephalus spp.	SYMPH4/EUCEP2	5	0 - 75	0 - 5
Balsamroot	Balsamorhiza spp.	BALSA	5	0 - 75	0 - 5
Bluebell	Mertensia spp.	MERTE	5	0 - 75	0 - 5
Buckwheat	Eriogonum spp.	ERIOG	5	0 - 75	0 - 5
Clover	Trifolium spp.	TRIFO	5	0 - 75	0 - 5
Fleabane	Erigeron spp.	ERIGE2	5	0 - 75	0 - 5
Goldenweed	Stenotus acaulis ssp. acaulis	STACA	5	0 - 75	0 - 5
Groundsel	Packera spp.	PACKE	5	0 - 75	0 - 5
Milkvetch	Astragalus spp.	ASTRA	5	0 - 75	0 - 5
Mountain dandelion	Agoseris spp.	AGOSE	5	0 - 75	0 - 5
Oregon grape	Mahonia repens	MARE11	5	0 - 75	0 - 5
Paintbrush	Castilleja spp.	CAST	5	0 - 75	0 - 5
Phlox	Phlox spp.	PHLOX	5	0 - 75	0 - 5
Pussytoes	Antennaria spp.	ANTEN	5	0 - 75	0 - 5
Ragwort	Senecio spp.	SENEC	5	0 - 75	0 - 5
Stonecrop	Sedum spp.	SEDUM	5	0 - 75	0 - 5
Stoneseed	Lithospermum spp.	LITHO3	5	0 - 75	0 - 5
Violet	Viola spp.	VIOLA	5	0 - 75	0 - 5
Western yarrow	Achillea millefolium	ACMI2	5	0 - 75	0 - 5
other perennial forbs (native)		2FP	5	0 - 75	0 - 5
TREES/SHRUBS					
Bitterbrush	Purshia tridentata	PUTR2	**6**	**150 - 225**	**10 - 15**
Black sagebrush	Artemisia nova	ARNO4	**7**	**75 - 150**	**5 - 10**
MISC. SHRUBS			**8**	**75 - 225**	**5 - 15**
Mountain big sagebrush	Artemisia tridentata ssp. vaseyana	ARTRV	8	0 - 75	0 - 5
Snowberry	Symphoricarpus spp.	SYMPH	8	0 - 75	0 - 5
Snowbrush ceanothus	Ceanothus velutinus	CEVE	8	0 - 75	0 - 5
Three-tip sagebrush	Artemisia tripartitia	ARTR4	8	0 - 75	0 - 5
other shrubs & half shrubs (native)		2SD/2SE/2TD/2TE	8	0 - 75	0 - 5

This list of plants and their relative proportions are based on near normal years. Fluctuations in species composition and relative production may change from year to year dependent upon precipitation or other climatic factors.

Plant Community Narratives

Following are the narratives for each of the described plant communities. These plant communities may not represent every possibility, but they probably are the most prevalent and repeatable plant communities. The plant composition tables shown above have been developed from the best available knowledge at the time of this revision. As more data is collected, some of these plant communities may be revised or removed, and new ones may be added. None of these plant communities should necessarily be thought of as "Desired Plant Communities". According to the USDA NRCS National Range and Pasture Handbook, Desired Plant Communities (DPC's) will be determined by the decision-makers and will meet minimum quality criteria established by the NRCS. The main purpose for including any description of a plant community here is to capture the current knowledge and experience at the time of this revision.

Bluebunch Wheatgrass/Bitterbrush Plant Community (HCPC)

The interpretive plant community for this site is the Historic Climax Plant Community. Potential vegetation is about 65% grasses or grass-like plants, 10% forbs, and 25% woody plants.
The major grasses include bluebunch wheatgrass, spike fescue, and thickspike wheatgrass. Other grasses include mutton, big, and Canby bluegrass, Columbia needlegrass, bottlebrush squirreltail, California and timber oatgrass, Idaho fescue, Letterman and western needlegrass, mountain brome, mountain muhly, oniongrass, spike trisetum, bentgrass, and prairie junegrass. Bitterbrush and black sagebrush are the dominant woody plants. Other woody plants include snowberry, snowbrush ceanothus, mountain big sagebrush, and three-tip sagebrush.

A typical plant composition for this state consists of bluebunch wheatgrass 35-45%, spike fescue 15-25%, thickspike wheatgrass 5-15%, other grasses and grass-like plants 10-20%, perennial forbs 5-10%, bitterbrush 10-15%, black sagebrush 5-10%, and 5-15% other woody species. Ground cover, by ocular estimate, varies greatly depending on the amount of exposed parent material, and herbage cover ranges from 15-25%.

The total annual production (air-dry weight) of this state is about 1500 pounds per acre, but it can range from about 1200 lbs./acre in unfavorable years to about 1800 lbs./acre in above average years.

The following is the growth curve of this plant community expected during a normal year:
Growth curve number: WY0101
Growth curve name: 20+M, UPLAND SITES
Growth curve description: ALL UPLAND SITES

JAN	FEB	MAR	APR	MAY	JUN	JUL	AUG	SEP	OCT	NOV	DEC
0	0	0	0	5	30	40	20	5	0	0	0

(Monthly percentages of total annual growth)

The state is stable and well adapted to the Central Rocky Mountains climatic conditions. The diversity in plant species allows for high drought resistance. This is a sustainable plant community (site/soil stability, watershed function, and biologic integrity).

Transitions or pathways leading to other plant communities are as follows:

- Nonuse and No Fire will convert this plant community to the *Bitterbrush/Black Sage State.*
- Heavy Continuous Season-Long Grazing will convert this plant community to the *Mountain Big Sage/Rhizomatous Wheatgrass State.*
- Wildfire or Severe Ground Disturbance will convert this plant community to the *Three-tip Sage State.*

Bitterbrush/Black Sage Plant Community
This plant community is a result of nonuse and protection from fire. Bitterbrush, mountain big sagebrush, and black sagebrush are significant components of this plant community, often making up 50-75% of the annual production. Dominant grasses include bluebunch wheatgrass and Columbia needlegrass.

The total annual production (air-dry weight) of this state is about 1200 pounds per acre, but it can range from about 1000 lbs./acre in unfavorable years to about 1600 lbs./acre in above average years.

The following is the growth curve of this plant community expected during a normal year:
Growth curve number: WY0101
Growth curve name: 20+M, UPLAND SITES
Growth curve description: ALL UPLAND SITES

JAN	FEB	MAR	APR	MAY	JUN	JUL	AUG	SEP	OCT	NOV	DEC
0	0	0	0	5	30	40	20	5	0	0	0

(Monthly percentages of total annual growth)

The state is stable and protected from excessive erosion. The biotic integrity of this plant community is usually intact, however forage value will decrease and wildlife values will shift toward different species. The watershed is functioning.

Transitional pathways leading to other plant communities are as follows:

- Prescribed Grazing will return this state to near *Historic Climax Plant Community (Bluebunch Wheatgrass/Bitterbrush State).*
- Heavy Continuous Season-long Grazing will convert this plant community to the *Mountain Big Sage/Rhizomatous Wheatgrass State.*
- Continuous Season-Long Grazing with Severe Ground Disturbance or Wildfire will convert this plant community to the *Three-tip Sage State.*

Mountain Big Sage/Rhizomatous Wheatgrass Plant Community
This plant community results from heavy, continuous season-long grazing. Mountain big sagebrush, green rabbitbrush and various forbs are significant components of this plant community. Dominant grasses in the understory include rhizomatous wheatgrass, Canby bluegrass, and Letterman needlegrass. Phlox and goldenweed are common forbs found in this state.

The total annual production (air-dry weight) of this state is about 1000 pounds per acre, but it can range from about 800 lbs./acre in unfavorable years to about 1400 lbs./acre in above average years.

The following is the growth curve of this plant community expected during a normal year:
Growth curve number: WY0101
Growth curve name: 20+M, UPLAND SITES
Growth curve description: ALL UPLAND SITES

JAN	FEB	MAR	APR	MAY	JUN	JUL	AUG	SEP	OCT	NOV	DEC
0	0	0	0	5	30	40	20	5	0	0	0

(Monthly percentages of total annual growth)

Soil erosion is accelerated because of increased bare ground. The biotic community is relatively stable. The watershed is functioning, but is at risk of further degradation. Water flow patterns and pedestals are obvious. Infiltration is reduced and runoff is increased.

Transitional pathways leading to other plant communities are as follows:

- Chemical Brush Management followed by deferment for 1 to 2 years as part of a Prescribed Grazing plan will return this state to near *Historic Climax Plant Community (Bluebunch Wheatgrass/Bitterbrush State).* Care should be taken when planning brush management to consider wildlife habitat and critical winter ranges.
- Continuous Season-Long Grazing with Severe Ground Disturbance or Wildfire will convert this plant community to the *Three-tip Sage State.*

Three-Tip Sage Plant Community
This vegetation state currently is a result of improper grazing management techniques followed by wildfire or severe ground disturbance. Three-tip sage flourishes and rhizomatous wheatgrass is the dominant understory grass. Other grasses/ grasslikes include needleleaf sedge and Letterman needlegrass.

The total annual production (air-dry weight) of this state is about 700 pounds per acre, but it can range from about 500 lbs./acre in unfavorable years to about 1200 lbs./acre in above average years.

The following is the growth curve of this plant community expected during a normal year:
Growth curve number: WY0101
Growth curve name: 20+M, UPLAND SITES
Growth curve description: ALL UPLAND SITES

JAN	FEB	MAR	APR	MAY	JUN	JUL	AUG	SEP	OCT	NOV	DEC
0	0	0	0	5	30	40	20	5	0	0	0

(Monthly percentages of total annual growth)

The state is vulnerable to excessive erosion. The biotic integrity of this plant community is at risk depending on how far a shift has occurred in plant composition toward sprouting shrubs and annual forbs. The watershed is at risk as bare ground increases.

Transitional pathways leading to other plant communities are as follows:
It is not often practicable or economically feasible to convert this plant community.

Ecological Site Interpretations

Animal Community – Wildlife Interpretations

Bluebunch Wheatgrass/Bitterbrush Plant Community (HCPC): Suitable thermal and escape cover for most wildlife is limited due to the low height and density of woody plants. Bitterbrush and sagebrush provide important winter forage for mule deer and elk.

Bitterbrush/Black Sage Plant Community: This plant community may be beneficial for the same wildlife that would use the Historic Climax Plant Community.

Mountain Big Sage/Rhizomatous Wheatgrass Plant Community: This plant community may be beneficial for the same wildlife that would use the Historic Climax Plant Community. However, the plant community composition is less diverse, and thus, less apt to meet the seasonal needs of these animals.

Three-Tip Sage Plant Community: This plant community exhibits a low level of plant species diversity. In most cases it is not a desirable plant community to select as a wildlife habitat management objective.

Animal Preferences (Quarterly - 1,2,3,4) for common plants in MLRA 43B, 20+M

COMMON NAME/GROUP NAME	SCIENTIFIC NAME	SYMBOL	*Cattle*	*Sheep*	*Horses*	*Mule Deer*	*Antelope*	*Elk*	*Moose*	*Mtn. Sheep*
GRASSES/GRASSLIKES										
Alpine bluegrass	Poa alpina	POAL2	DDDD	DDDD	DDDD	DDDD	DDDD	DDDD	DDDD	DDDD
Alpine timothy	Phleum alpinum	PHAL2	PPPP	PPPP	PPPP	DDDD	NNNN	PPPP	DDDD	DDDD
American sloughgrass	Beckmannia syzigachne	BESY	DDDD	UUUU	DDDD	UUUU	UUUU	DDDD	UUUU	UUUU
Baltic rush	Juncus balticus	JUBA	DDDD	UUUU	DDDD	UUUU	UUUU	DDDD	UUUU	UUUU
Basin wildrye	Leymus cinereus	LECI4	PPPP	PPPP	PPPP	DDDD	DDDD	PPPP	DDDD	PPPP
Beaked sedge	Carex rostrata	CARO6	DDDD	UUUU	DDDD	UUUU	UUUU	DDDD	DDDD	UUUU
Bearded wheatgrass	Elymus trachycaulus ssp. subsecundus	ELTRS	PPPP	DDDD	PPPP	DDDD	DDDD	PPPP	DDDD	DDDD
Bentgrass	Agrostis spp.	AGROS2	PPPP	DDDD	PPPP	DDDD	DDDD	PPPP	DDDD	DDDD
Big bluegrass	Poa ampla (syn. to P. secunda)	POAM (POSE)	PPPP	DDDD	PPPP	PPPP	PPPP	PPPP	PPPP	PPPP
Blue wildrye	Elymus glaucus	ELGL	PPPP	DDDD	PPPP	DDDD	UUUU	PPPP	DDDD	DDDD
Bluebunch wheatgrass	Pseudoroegneria spicata	PSSP6	DPUD	DPUD	DPUD	DDDD	DDDD	PPPP	DDDD	DDDD
Bluejoint reedgrass	Calamagrostis canadensis	CACA4	PPPP	DDDD	PPPP	UUUU	UUUU	PPPP	DDDD	DDDD
Bottlebrush squirreltail	Elymus elymoides ssp. elymoides	ELELE	UDUU	UDUU	UDUU	UDUU	UDUU	UDUU	UDUU	UDUU
Bulbous bluegrass	Poa bulbosa	POBU	UDUU	UDUU	UDUU	UDUU	UDUU	UDUU	UDUU	UDUU
Bulrush	Scirpus spp.	SCIRP	DDDD	UUUU	DDDD	UUUU	UUUU	DDDD	DDDD	UUUU
Bur-reed	Sparganium spp.	SPARG	UUUU	UUUU	UUUU	UUUU	UUUU	UUUU	UUUU	UUUU
California oatgrass	Danthonia californica	DACA3	PPPP	DDDD	DDDD	DDDD	DDDD	PPPP	DDDD	DDDD
Canada wildrye	Elymus canadensis	ELCA4	PPPP	PPPP	PPPP	DDDD	DDDD	PPPP	PPPP	PPPP
Canby bluegrass	Poa canbyi (syn. to Poa secunda)	POCA (POSE)	PPPP	DPDD	DPPD	DPPD	DPPD	PPPP	DPPD	DPPD
Cattail	Typha spp.	TYPHA	DUUD	DUUD	DUUD	DUUD	DUUD	DUUD	DUUD	DUUD
Columbia needlegrass	Achnatherum nelsonii	ACNE9	PPPP	DDDD	PPPP	DDDD	DDDD	PPPP	DDDD	DDDD
Cusick bluegrass	Poa cusickii	POCU3	PPPP	PPPP	PPPP	PPPP	PPPP	PPPP	PPPP	PPPP
Dunehead sedge	Carex phaeocephala	CAPH2	UUUU	UUUU	UUUU	UUUU	UUUU	UUUU	UUUU	UUUU
Elk sedge	Carex geyeri	CAGE2	UDDU	UUUU	UDUU	UUUU	UUUU	DDDD	UUUU	UUUU
Fowl bluegrass	Poa palustris	POPA2	DDDD	DDDD	DDDD	UUUU	UUUU	DDDD	DDDD	UUUU
Green needlegrass	Nassella viridula	NAVI4	PPPP	PPPP	PPPP	PPPP	PPPP	PPPP	PPPP	PPPP
Idaho fescue	Festuca idahoensis	FEID	DDPD	DDPD	DDPD	DDDD	DDDD	DDPD	DDDD	PDPP
Indian ricegrass	Achnatherum hymenoides	ACHY	PPPP	PPPP	PPPP	PPPP	PPPP	PPPP	PPPP	PPPP
Inland sedge	Carex interior	CAIN11	DDDD	DDDD	DDDD	UUUU	UUUU	DDDD	DDDD	DDDD
Letterman needlegrass	Achnatherum lettermanii	ACLE9	DPDD	DPDD	UDUU	DDDD	DDDD	PPPP	DDDD	DDDD
Little barley	Hordeum pusillum	HOPU	UDUU	UDUU	UDUU	UDUU	UDUU	UDUU	UDUU	UDUU
Little ricegrass	Piptatherum exiguum	PIEX3	PPPP	PPPP	PPPP	PPPP	PPPP	PPPP	PPPP	PPPP
Mannagrass	Glyceria spp.	GLYCE	DDDD	UUUU	DDDD	UUUU	UUUU	DDDD	DDDD	UUUU
Meadow barley	Hordeum brachyantherum	HOBR2	UDUU	UDUU	UDUU	UDUU	UDUU	UDUU	UDUU	UDUU
Montana wheatgrass	Elymus albicans	ELAL7	DDDD	DDDD	DDDD	DDDD	DDDD	DDDD	DDDD	DDDD
Mountain brome	Bromus marginatus	BRMA4	PPPP	PPPP	DDDD	DDDD	UUUU	PPPP	DDDD	DDDD
Mountain muhly	Muhlenbergia montana	MUMO	DDDD	DDDD	DDDD	DDDD	DDDD	DDDD	DDDD	DDDD
Nebraska sedge	Carex nebrascensis	CANE2	PPPP	PPPP	PPPP	DDDD	DDDD	PPPP	DDDD	DDDD
Needleleaf sedge	Carex duriuscula	CADU6	UUUU	UUUU	UUUU	UUUU	UUUU	UUUU	UUUU	UUUU
Nodding bluegrass	Poa reflexa	PORE	DDDD	DDDD	DDDD	DDDD	DDDD	DDDD	DDDD	DDDD
Nodding brome	Bromus porteri	BRPO2	PPPP	PPPP	DDDD	DDDD	UUUU	PPPP	DDDD	DDDD
Northern reedgrass	Calamagrostis stricta ssp. inexpansa	CASTI3	PPPP	DDDD	PPPP	UUUU	UUUU	PPPP	DDDD	DDDD
Onespike oatgrass	Danthonia unispicata	DAUN	DDDD	PPPP	DDDD	PPPP	DDDD	DDDD	DDDD	DDDD
Oniongrass	Melica bulbosa	MEBU	PPPP	PPPP	PPPP	PPPP	PPPP	PPPP	PPPP	PPPP
Pinegrass	Calamagrostis rubescens	CARU	UDUU	UUUU	UDUU	UDUU	UDUU	DDDD	UDUU	UDUU
Prairie junegrass	Koeleria macrantha	KOMA	DDDD	DDDD	DDDD	DDDD	DDDD	DDDD	DDDD	DDDD
Reed canarygrass	Phalaris arundinacea	PHAR3	DDDD	UUUU	DDDD	UUUU	UUUU	DDDD	UUUU	UUUU
Redtop	Agrostis stolonifera	AGST2	PPPP	DDDD	PPPP	DDDD	DDDD	PPPP	DDDD	PPPP
Richardson needlegrass	Achnatherum richardsonii	ACRI8	PPPP	PPPP	DDDD	DDDD	DDDD	PPPP	DDDD	PPPP
Ross sedge	Carex rossii	CARO5	DDDD	DDDD	DDDD	DDDD	DDDD	DDDD	DDDD	DDDD
Roughleaf ricegrass	Oryzopsis asperifolia	ORAS	PPPP	PPPP	PPPP	PPPP	PPPP	PPPP	PPPP	PPPP
Sandberg bluegrass	Poa secunda	POSE	UDUU	UDUU	UDUU	UDUU	UDUU	UDUU	UDUU	UDUU
Shortawn foxtail	Alopecurus aequalis	ALAE	DDDU	DDDU	DDDU	DDDU	DDDU	DDDU	DDDU	DDDU
Slender wheatgrass	Elymus trachycaulus	ELTR7	PPPP	DDDD	PPPP	DDDD	DDDD	PPPP	DDDD	DDDD
Spikefescue	Leucopoa kingii	LEKI2	PPPP	DDDD	PPPP	PPPP	DDDD	PPPP	DDDD	DDDD
Spikerush	Eleocharis spp.	ELEOC	UUUU	UUUU	UUUU	UUUU	UUUU	UUUU	UUUU	UUUU
Spike trisetum	Trisetum spicatum	TRSP2	PPPP	DDDD	PPPP	DDDD	DDDD	PPPP	DDDD	DDDD
Sun sedge	Carex inops ssp. heliophila	CAINH2	PPPP	DDDD	PPPP	DDDD	UUUU	PPPP	UUUU	DDDD
Thickspike wheatgrass	Elymus lanceolatus ssp. lanceolatus	ELLAL	DDDD	DDDD	DDDD	DDDD	DDDD	DDDD	DDDD	DDDD
Threadleaf sedge	Carex filifolia	CAFI	DDDD	DDDD	DDDD	DDDD	PPPP	DDDD	DDDD	DDDD
Thurber's bentgrass	Agrostis humilus	AGHU	PPPP	DDDD	PPPP	DDDD	DDDD	PPPP	DDDD	DDDD
Timber oatgrass	Danthonia intermedia	DAIN	DDDD	DDDD	DDDD	UUUU	UUUU	DDDD	DDDD	DDDD
Tufted hairgrass	Deschampsia caespitosa	DECA18	PPPP	PPPP	PPPP	DDDD	DDDD	PPPP	DDDD	DDDD
Water hemlock	Cicuta spp.	CICUT	TTTT	TTTT	TTTT	TTTT	TTTT	TTTT	TTTT	TTTT
Water sedge	Carex aquatilis ssp. aquatilis	CAAQA	DDDD	UUUU	DDDD	UUUU	UUUU	DDDD	DDDD	UUUU
Western needlegrass	Achnatherum occidentale	ACOC3	PPPP	PPPP	PPPP	DDDD	DDDD	PPPP	DDDD	DDDD
Western wheatgrass	Pascopyrum smithii	PASM	DDDD	DDDD	DDDD	DDDD	DDDD	DDDD	DDDD	DDDD
Wheeler bluegrass	Poa nervosa	PONE2	DDDD	DDDD	DDDD	DDDD	DDDD	DDDD	DDDD	DDDD
FORBS										
Alumroot	Heuchera spp.	HEUCH	UUUU	UUUU	UUUU	UUUU	UUUU	UUUU	UUUU	UUUU
American bistort	Polygonum bistortoides	POBI6	DDDD	DDDD	DDDD	DDDD	DDDD	DDDD	DDDD	DDDD
American vetch	Vicia americana	VIAM	PPPP	PPPP	PPPP	PPPP	PPPP	PPPP	PPPP	PPPP
Anemone	Anemone spp.	ANEMO	UTTU	UTTU	UTTU	UTTU	UTTU	UTTU	UTTU	UTTU
Arnica	Arnica spp.	ARNIC	UUUU	UUUU	UUUU	DDDD	UUUU	UUUU	UUUU	UUUU
Arrowgrass	Triglochin maritimum	TRMA4	TTTT	TTTT	TTTT	TTTT	TTTT	TTTT	TTTT	TTTT
Arrowhead	Sagitarria spp.	SAGIT	UUUU	UUUU	UUUU	UUUU	UUUU	UUUU	UUUU	UUUU
Aster	Eucephalus & Symphyotrichum spp.	EUCEP2/ SYMPH4	UUUU	UUUU	UUUU	UUUU	UUUU	UUUU	UUUU	UUUU
Avens (prairie smoke)	Geum spp.	GEUM	UUUU	UUUU	UUUU	UUUU	UUUU	UUUU	UUUU	UUUU
Balsamroot	Balsamorhiza spp.	BALSA	DPDD	PPPP	DPDD	PPPP	PPPP	PPPP	PPPP	PPPP
Baneberry	Actaea rubra	ACRU2	UUUU	UUUU	UUUU	UUUU	UUUU	UUUU	UUDU	UUUU
Bedstraw	Galium spp.	GALIU	UUUU	UUUU	UUUU	UUUU	UUUU	UUUU	UUUU	UUUU
Biscuitroot	Lomatium spp.	LOMAT	DDDD	DDDD	UUUU	DDDD	DDDD	DDDD	DDDD	DDDD
Bitterroot	Lewisia rediviva ssp. Rediviva	LERER	UDUU	UDUU	UDUU	UDUU	UDUU	UDUU	UDUU	UDUU
Bladderpod	Lesquerella spp.	LESQU	UUUU	DDDD	UUUU	DDDD	DDDD	UUUU	DDDD	DDDD
Blanketflower	Gaillardia aristata	GAAR	UUUU	UUUU	UUUU	UUUU	UUUU	UUUU	UUUU	UUUU
Bluebell	Mertensia spp.	MERTE	DDDD	DDDD	DDDD	DDDD	DDDD	DDDD	DDDD	DDDD
Blue-eyed grass	Sisyrinchium spp.	SISYR	DDDD	PPPP	DDDD	DDDD	DDDD	DDDD	UUUU	NNNN

Animal Preferences (Quarterly - 1,2,3,4) for common plants in MLRA 43B, 20+M

COMMON NAME/GROUP NAME	SCIENTIFIC NAME	SYMBOL	*Cattle*	*Sheep*	*Horses*	*Mule Deer*	*Antelope*	*Elk*	*Moose*	*Mtn. Sheep*
Buckwheat	Eriogonum spp.	ERIOG	UUUU	DDDD	UUUU	UUUU	UUUU	UUUU	UUUU	UUUU
Buttercup	Ranunculus spp.	RANUN	DDDD	DDDD	DDDD	DDDD	DDDD	DDDD	UUUU	DDDD
Cinquefoil (herbaceous)	Potentilla spp.	POTEN	UUUU	UUUU	UUUU	UUUU	UUUU	UUUU	UUUU	UUUU
Clematis	Clematis spp.	CLEMA	UUUU	DDDD	UUUU	DDDD	DDDD	UUUU	DDDD	DDDD
Clover	Trifolium spp.	TRIFO	PPPP	PPPP	PPPP	PPPP	PPPP	PPPP	PPPP	PPPP
Columbine	Aquilegia spp.	AQUIL	DDDD	DDDD	DDDD	DDDD	DDDD	DDDD	DDDD	DDDD
Cow parsnip	Heralcleum maximum	HEMA80	PPPP	PPPP	PPPP	PPPP	PPPP	PPPP	DDDD	PPPP
Daisy	Townsendia spp.	TOWNS	DDDD	DDDD	UUUU	DDDD	DDDD	DDDD	NNNN	NNNN
Deathcamas, meadow	Zigadenus venenosus	ZIVE	TTTT	TTTT	TTTT	TTTT	TTTT	TTTT	TTTT	TTTT
Dock	Rumex spp.	RUMEX	UUUU	UUUU	UUUU	UUUU	UUUU	UUUU	UUUU	UUUU
Dustymaiden (morningbride)	Chaenactic douglasii var. alpina	CHDOA2	UUUU	UUUU	UUUU	UUUU	UUUU	UUUU	UUUU	UUUU
Elephanthead lousewort	Pedicularis groenlandica	PEGR2	UUUU	DDDD	UUUU	DDDD	UUUU	UUUU	DDDD	DDDD
Elk thistle	Cirsium foliosum	CIFO	UUDU	UUUU	UDPU	UDDU	UUUU	UDPU	UUUU	UUUU
False hellebore	Veratrum viride	VEVI	UTTU	UTTU	UTTU	UTTU	UTTU	UTTU	UTTU	UTTU
False solomonseal	Maianthemum spp. (syn. Smilacina spp.)	MAIAN	UUUU	UUUU	UUUU	UUUU	UUUU	UUUU	UUUU	UUUU
Fireweed	Chamerion angustifolium (syn. Epilobium angustifolium)	CHAN9	PPPP	DDDD	UUUU	PPPP	DDDD	PPPP	PPPP	DDDD
Fleabane	Erigeron spp.	ERIGE2	DDDD	DDDD	DDDD	DDDD	DDDD	DDDD	DDDD	DDDD
Forget-me-not	Myosotis spp.	MYOSO								
Gentian	Gentiana spp.	GENTI	UUUU	UUUU	UUUU	UUUU	UUUU	UUUU	UUUU	UUUU
Geranium	Geranium spp.	GERAN	UUUU	DDDD	UUUU	PPPP	DDDD	DPPD	DPDD	DDDD
Gilia	Gilia spp.	GILIA	UUUU	UUUU	UUUU	UUUU	UUUU	UUUU	UUUU	UUUU
Goldenpea	Thermopsis spp.	THERM	TTTT	TTTT	TTTT	TTTT	TTTT	TTTT	TTTT	TTTT
Goldenrod	Solidago spp.	SOLID	UUUU	UUUU	UUUU	UUUU	UUUU	UUUU	UUUU	UUUU
Goldenweed	Stenotus acaulis ssp. acaulis (syn. Happlopappus acaulis)	STACA	UUUU	UUUU	UUUU	UUUU	UUUU	UUUU	UUUU	UUUU
Green gentain	Frasera speciosa	FRSP	DDDD	DDDD	DDDD	DDDD	DDDD	DDDD	DDDD	DDDD
Groundsel	Packera spp.	PACKE	TTTT	UUUU	TTTT	UUUU	UUUU	UUUU	UUUU	UUUU
Harebell (bellflower)	Campanula spp.	CAMPA	UUUU	UUUU	UUUU	UUUU	UUUU	UUUU	UUUU	UUUU
Hawksbeard	Crepis spp.	CREPI	UUUU	PPPP	UUUU	DDDD	DDDD	UUUU	DDDD	DDDD
Hawkweed	Hieracium spp.	HIERA	UUUU	DDDD	UUUU	DDDD	DDDD	DDDD	DDDD	DDDD
Horsemint (Hyssop)	Agastache spp.	AGAST	DDDD	DDDD	UUUU	DDDD	DDDD	DDDD	NNNN	NNNN
Horsetail	Equisetum spp.	EQUIS	UUUU	UUUU	TTTT	UUUU	UUUU	UUUU	UUUU	UUUU
Iris (Rocky Mountain)	Iris missouriensis	IRMI	UUUU	UUUU	UUUU	UUUU	UUUU	UUUU	UUUU	UUUU
Larkspur (b)	Delphinium spp.	DELPH	DTDD	DTDD	DTDD	DTDD	DTDD	DTDD	DTDD	DTDD
Licorice-root	Ligusticum spp.	LIGUS	DDDD	DDDD	DDDD	DDDD	DDDD	DDDD	DDDD	DDDD
Locoweed	Oxytropis spp.	OXYTR	TTUU	TTUU	TTUU	TTUU	TTUU	TTUU	TTUU	TTUU
Lousewort	Pedicularis spp.	PEDIC	UUUU	UUUU	UUUU	UUUU	UUUU	UUUU	NNNN	NNNN
Lupine (c)	Lupinus spp.	LUPIN	DDTT	DDTT	DDTT	DDTT	DDTT	DDTT	DDTT	DDTT
Marsh marigold	Caltha leptosepala ssp. leptosepala	CALEL7	UUUU	UUUU	UUUU	UUUU	UUUU	UUUU	UUUU	UUUU
Meadow-rue	Thalictrum occidentale	THOC	DDDD	PPPP	DDDD	PPPP	PPPP	DDDD	PPPP	PPPP
Milkvetch	Astragalus spp.	ASTRA	DDDD	DDDD	DDDD	DDDD	DDDD	DDDD	DDDD	DDDD
Miner's-candle	Cryptantha spp.	CRYPT	UUUU	UUUU	UUUU	UUUU	UUUU	UUUU	UUUU	UUUU
Mint	Mentha arvensis	MEAR4	UUUU	UUUU	UUUU	UUUU	UUUU	UUUU	UUUU	UUUU
Miterwort	Mitella spp.	MITEL	UUUU	UUUU	UUUU	UUUU	UUUU	UUUU	UUUU	UUUU
Monkeyflower	Mimulus spp.	MIMUL	UDUU	UDUU	UDUU	UDUU	UDUU	UDUU	UDUU	UDUU
Monkshood	Aconitum spp.	ACONI	TTTT	TTTT	TTTT	TTTT	TTTT	TTTT	TTTT	TTTT
Mountain dandelion	Agoseris spp.	AGOSE	DDDD	PPPP	DDDD	PPPP	DDDD	DDDD	DDDD	DDDD
Mountain hollyhock	Iliamna rivularis	ILRI	PPPP	PPPP	UUUU	PPPP	NNNN	PPPP	NNNN	NNNN
Mule-ears	Wyethia amplexicaulis	WYAM	UUUU	UUUU	UUUU	UUUU	UUUU	UUUU	UUUU	UUUU
Mustard	Draba spp.	DRABA	UUUU	UUUU	UUUU	UUUU	UUUU	UUUU	UUUU	UUUU
Nailwort	Paronychia spp.	PARON	UUUU	UUUU	UUUU	UUUU	UUUU	UUUU	UUUU	UUUU
Onion	Allium spp.	ALLIU	DPDD	DPDD	DPDD	DPDD	DPDD	DPDD	DPDD	DPDD
Orange sneezeweed (rubberweed)	Hymenoxys spp.	HYMEN7	TTTT	TTTT	TTTT	TTTT	TTTT	TTTT	TTTT	TTTT
Oregon grape	Mahonia repens	MARE11	UUUU	DDDD	UUUU	PPPP	UUUU	UUUU	DDDD	NNNN
Owl's-clover	Orthocarpus luteus	ORLU2	UUUU	UUUU	UUUU	UUUU	UUUU	UUUU	UUUU	UUUU
Paintbrush	Castilleja spp.	CAST	DDDD	DDDD	DDDD	DDDD	DDDD	DDDD	DDDD	DDDD
Pale bastard toadflax	Comandra umbellata	COUMP	UUUU	UUUU	UUUU	UUUU	UUUU	UUUU	UUUU	UUUU
Pasqueflower	Pulsatilla patens	PUPA5	UTTU	UTTU	UTTU	UTTU	UTTU	UTTU	UTTU	UTTU
Peavine	Lathyrus spp.	LATHY	DDDD	DDDD	DDDD	DDDD	DDDD	DDDD	DDDD	DDDD
Penstemon	Penstemon spp.	PENST	PPPP	PPPP	PPPP	PPPP	PPPP	PPPP	PPPP	PPPP
Phacelia	Phacelia spp.	PHACE	DDDD	DDDD	DDDD	DDDD	DDDD	DDDD	DDDD	DDDD
Phlox	Phlox spp.	PHLOX	UUUU	UUUU	UUUU	UUUU	UUUU	UUUU	UUUU	UUUU
Plantain	Plantago spp.	PLANT	UUUU	UUUU	UUUU	UUUU	UUUU	UUUU	UUUU	UUUU
Primrose	Primula spp.	PRIMU	UUUU	UUUU	UUUU	UUUU	UUUU	UUUU	UUUU	UUUU
Pussytoes	Antennaria spp.	ANTEN	UUUU	UUUU	UUUU	UUUU	UUUU	UUUU	UUUU	UUUU
Ragwort (groundsel)	Senecio spp.	SENEC	TTTT	TTTT	TTTT	TTTT	TTTT	TTTT	TTTT	TTTT
Rockcress	Arabis spp.	ARABI2	UUUU	UUUU	UUUU	UUUU	UUUU	UUUU	UUUU	UUUU
Rockjasmine	Androsace spp.	ANDRO3	UUUU	UUUU	UUUU	UUUU	UUUU	UUUU	UUUU	UUUU
Sandwort	Arenaria spp.	ARENA	UUUU	UUUU	UUUU	UUUU	UUUU	UUUU	NNNN	NNNN
Saxifrage	Saxifraga spp.	SAXIF	UUUU	DDDD	UUUU	DDDD	DDDD	DDDD	DDDD	DDDD
Scarlet gilia	Ipomopsis aggregata	IPAG	UUUU	UUUU	UUUU	UUUU	UUUU	UUUU	UUUU	UUUU
Shootingstar	Dodecatheon spp.	DODEC	DDDD	DDDD	UUUU	DDDD	UUUU	UUUU	UUUU	UUUU
Smartweed (knotweed)	Polygonum spp.	POLYG4	UUUU	UUUU	UUUU	DDDD	UUUU	UUUU	UUUU	UUUU
Speedwell	Veronica spp.	VERON	DDDD	DDDD	DDDD	DDDD	DDDD	DDDD	DDDD	DDDD
Springbeauty	Claytonia spp.	CLAYT	UDUU	UDUU	UDUU	UDUU	UDUU	UDUU	UDUU	UDUU
Starwort	Stellaria spp.	STELL	UUUU	UUUU	UUUU	UUUU	UUUU	UUUU	UUUU	UUUU
Stingine nettle	Urtica dioica	URDI	UUUU	UUUU	UUUU	UUUU	UUUU	UUUU	UUUU	UUUU
Stonecrop	Sedum spp.	SEDUM	UUUU	UUUU	UUUU	UUUU	UUUU	UUUU	UUUU	UUUU
Stoneseed	Lithospermum spp.	LITHO3	UUUU	UUUU	UUUU	UUUU	UUUU	UUUU	UUUU	UUUU
Strawberry	Frageria vesca	FRVE	DDDD	DDDD	DDDD	DDDD	DDDD	DDDD	DDDD	DDDD
Sunflower	Helianthus spp.	HELIA3	PPPP	PPPP	PPPP	PPPP	PPPP	PPPP	PPPP	PPPP
Sweetcicely	Osmorhiza beteroi	OSBE	UUUU	DDDD	UUUU	DDDD	DDDD	DDDD	DDDD	DDDD
Sweetroot	Osmorhiza occidentalis	OSOC	DDDD	DDDD	DDDD	DDDD	DDDD	DDDD	DDDD	DDDD
Sweetvetch	Hedysarum spp.	HEDYS	DDDD	DDDD	DDDD	DDDD	DDDD	DDDD	DDDD	DDDD
Trillium	Trillium spp.	TRILL	UUUU	DDDD	UUUU	DDDD	DDDD	UUUU	UUUU	DDDD
Twinflower	Linnaea borealis ssp. americana	LIBOA	UUUU	UUUU	UUUU	UUUU	UUUU	UUUU	UUUU	UUUU
Twinpod	Physaria spp.	PHYSA2	UUUU	DDDD	UUUU	DDDD	DDDD	DDDD	DDDD	DDDD
Valerian (tobacco root)	Valeriana spp.	VALER	DDDD	PPPP	DDDD	DDDD	DDDD	DDDD	DDDD	PPPP
Violet	Viola spp.	VIOLA	DDDD	DDDD	DDDD	DDDD	DDDD	DDDD	DDDD	DDDD

Animal Preferences (Quarterly - 1,2,3,4) for common plants in MLRA 43B, 20+M

COMMON NAME/GROUP NAME	SCIENTIFIC NAME	SYMBOL	*Cattle*	*Sheep*	*Horses*	*Mule Deer*	*Antelope*	*Elk*	*Moose*	*Mtn. Sheep*
Waterleaf	Hydrophyllum spp.	HYDRO4	DDDD	DDDD	DDDD	PPPP	DDDD	DDDD	DDDD	DDDD
Wavyleaf thistle	Cirsium undulatum var. undulatum	CIUNU	UUDU	UUUU	UDPU	UDDU	UUUU	UDPU	UUUU	UUUU
Western coneflower	Rudbeckia occidentalis	RUOC2	UUUU	UUUU	UUUU	UUUU	UUUU	UUUU	UUUU	UUUU
Woodland-star	Lithophragma spp.	LITHO2	UUUU	DDDD	UUUU	DDDD	DDDD	DDDD	DDDD	DDDD
Yarrow	Achillea millefolium	ACMI2	UUUU	UUUU	UUUU	UUUU	UUUU	UUUU	UUUU	NNNN
Yellowbells	Fritillaria pudica	FRPU2	UUUU	UUUU	UUUU	UUUU	UUUU	UUUU	UUUU	UUUU
Yellow sneezeweed	Helenium autumnale	HEAU	TTTT	TTTT	TTTT	TTTT	TTTT	TTTT	NNNN	NNNN
TREES, SHRUBS & HALF-SHRUBS										
Alpine laurel (bog kalmia)	Kalmia microphylla	KAMI	TTTT	TTTT	TTTT	TTTT	TTTT	TTTT	TTTT	TTTT
Antelope bitterbrush	Purshia tridentata	PUTR2	PPPP	PPPP	DDDD	PPPP	PPPP	PPPP	PDDP	PPPP
Aspen	Populus tremuloides	POTR5	PPPP	DDDD	DDDD	PPPP	DDDD	PPPP	PDPP	DDDD
Beebalm (wild bergamot)	Monarda fistulosa ssp. fistulosa var. menthifolia	MOFIM2	DDDD	DDDD	UUUU	DDDD	DDDD	DDDD	DDDD	DDDD
Black sagebrush	Artemisia nova	ARNO4	DUUD	DDDD	UUUU	DDDD	DDDD	DDDD	DDDD	DDDD
Chokecherry (d)	Prunus virginiana	PRVI	DTTD	DTTD	DDDD	PPPP	UUUU	DDDD	DDDD	DDDD
Common juniper	Juniperus communis var. depressa	JUCOD	UUUU	UUUU	UUUU	DUUD	UUUU	UUUU	UUUU	UUUU
Cottonwood (narrowleaf)	Populus angustifolia	POAN3	DDDD	DDDD	DDDD	DDDD	UUUU	DDDD	DDDD	DDDD
Curl-leaf mountain mahogany	Cercocarpus ledifolius	CELE3	PPPP	PPPP	DDDD	PPPP	UUUU	PPPP	PPPP	PPPP
Currant	Ribes spp.	RIBES	DDDD	DDDD	DDDD	PPPP	UUUU	DDDD	DDDD	DDDD
Dogwood	Cornus spp.	CORNU	DDDD	DPDD	DDDD	DPDD	DDDD	DPDD	DPDD	DDDD
Douglas fir	Pseudotsuga menziesii	PSME	UUUU	UUUU	UUUU	UUUU	UUUU	UUUU	UUUU	UUUU
Dwarf huckleberry	Vaccinium caespitosum	VACA13	UUUU	UUUU	UUUU	UUUU	UUUU	UUUU	UUUU	UUUU
Elderberry	Sambucus spp.	SAMBU	DDDD	DDDD	UUUU	PPPP	UUUU	DDDD	DDDD	DDDD
Goldenweed, shrubby	Ericameria suffruticosus (syn. Happlopappus suffruticosus)	ERSU13	UUUU	UUUU	UUUU	UUUU	UUUU	UUUU	UUUU	UUUU
Green rabbitbrush	Chrysothamnus viscidiflorus	CHVI8	UUUU	UUUU	UUUU	DUUD	DUUD	UUUU	UUUU	UUUU
Green sagewort	Artemisia dracunculus	ARDR4	UUUU	UUUU	UUUU	UUUU	UUUU	UUUU	UUUU	UUUU
Grouse whortleberry	Vaccinium scoparium	VASC	UUUU	UUUU	UUUU	UUUU	UUUU	UUUU	UUUU	UUUU
Honeysuckle, Utah	Lonicera utahensis	LOUT2	UUUU	DDDD	UUUU	DDDD	UUUU	UUUU	PPPP	DDDD
Kinnikinnick (bearberry)	Arctostaphylos uva-ursi	ARUV	UUUU	UUUU	UUUU	UUUU	UUUU	UUUU	UUUU	UUUU
Limber pine	Pinus flexilis	PIFL2	UUUU	UUUU	UUUU	UUUU	UUUU	UUUU	UUUU	UUUU
Littleleaf mountain mahogany	Cercocarpus intricatus	CEIN7	DDDD	PPPP	UUUU	PPPP	UUUU	DDDD	DDDD	PPPP
Lodgepole pine	Pinus contorta	PICO	UUUU	UUUU	UUUU	UUUU	UUUU	UUUU	UUUU	UUUU
Low sagebrush	Artemisia arbuscula ssp. arbuscula	ARAR8	UUUU	DDDD	UUUU	DDDD	DDDD	DDDD	DDDD	DDDD
Mountain ash (e)	Sorbus scopulina var. scopulina	SOSCS	DDDD	DDDD	DDDD	DDDD	DDDD	DDDD	PPPP	DDDD
Mountain big sagebrush	Artemisia tridentata ssp. vaseyana	ARTRV	UUUU	DDDD	UUUU	DDDD	DDDD	DDDD	UUUU	DDDD
Oregon boxleaf	Paxistima myrsinites	PAMY	UUUU	UUUU	UUUU	DDDD	NNNN	DDDD	DDDD	DDDD
Raspberry	Rubus idaeus	RUID	UUUU	UUUU	UUUU	DDDD	UUUU	DDDD	DDDD	DDDD
Rocky Mountain juniper	Juniperus scopulorum	JUSC2	UUUU	UUUU	UUUU	DUUD	UUUU	UUUU	UUUU	UUUU
Rocky Mountain maple	Acer glabrum	ACGL	DDDD	DDDD	DDDD	DDDD	DDDD	DDDD	DDDD	DDDD
Russet buffaloberry	Shepherdia canadensis	SHCA	UUUU	UUUU	UUUU	UUUU	UUUU	UUUU	UUUU	UUUU
Rubber rabbitbrush	Ericameria nauseosa	ERNA10	UUUU	DDDD	UUUU	DDDD	PPPP	DDDD	UUUU	DDDD
Serviceberry	Amelanchier alnifolia	AMAL2	DDDD	PPPP	UUUU	PPPP	DDDD	DDDD	DDDD	DDDD
Shrubby cinquefoil	Dasiphora floribunda	DAFL3	UUUU	UUUU	UUUU	UUUU	UUUU	UUUU	UUUU	UUUU
Silverberry	Elaeagnus commutata	ELCO	DDUU	DDDD	UUUU	DDUU	DDDD	DDDD	DDUU	DDDD
Silver sagebrush	Artemisia cana	ARCA13	UUUU	DDDD	UUUU	DDDD	PPPP	DDDD	DDDD	DDDD
Snowberry	Symphoricarpus spp.	SYMPH	UUUU	UUUU	UUUU	DDDD	UUUU	UUUU	UUUU	UUUU
Snowbrush ceanothus	Ceanothus velutinus	CEVE	UUUU	UUUU	UUUU	DDDD	UUUU	DUUD	UUUU	DDDD
Spiked big sagebrush	Artemisia tridentata ssp. spiciformis	ARTRS2	UUUU	UUUU	UUUU	UUUU	UUUU	DDDD	UUUU	DDDD
Spirea	Spiraea spp.	SPIRA	UUUU	UUUU	UUUU	UUUU	UUUU	UUUU	UUUU	UUUU
Spruce	Picea spp.	PICEA	UUUU	UUUU	UUUU	UUUU	UUUU	UUUU	UUUU	UUUU
Subalpine fir	Abies lasiocarpa	ABLA	UUUU	UUUU	UUUU	UUUU	UUUU	UUUU	DNNN	UUUU
Threetip sagebrush	Artemisia tripartita	ARTR4	UUUU	DDDD	UUUU	DDDD	DDDD	UUUU	DDDD	DDDD
True mountain mahogany	Cercocarpus montanus	CEMO2	PPPP	PPPP	DDDD	PPPP	UUUU	PPPP	PPPP	PPPP
Twinberry	Lonicera spp.	LONIC	UUUU	DDDD	UUUU	DDDD	UUUU	UUUU	PPPP	DDDD
Water birch	Betula occidentalis	BEOC2	DDDD	DDDD	DDDD	DDDD	DDDD	DDDD	DDDD	DDDD
Whitebark pine	Pinus albicaulis	PIAL	UUUU	UUUU	UUUU	UUUU	UUUU	DUUU	UUUU	UUUU
Wild rose	Rosa woodsii var. woodsii	ROWOW	DDDD	DDDD	UUUU	DDDD	DDDD	DDDD	DDDD	DDDD
Willows:	Salix spp.	SALIX	DDDD	DDDD	UUUU	PPPP	DDDD	DDDD	PPPP	DDDD
Arctic (alpine)	Salix arctica	SAAR27	DDDD	DDDD	DDDD	PPPP	NNNN	DDDD	PPPP	PPPP
Barrenground (short-fruit)	Salix brachycarpa	SABR	DDDD	DDDD	DDDD	DDDD	UUUU	DDDD	PPPP	DDDD
Bebbs	Salix bebbiana	SABE2	DDDD	DDDD	DDDD	DDDD	UUUU	DDDD	PPPP	DDDD
Blueberry	Salix myrtillifolia	SAMY	PPPP	PPPP	PPPP	PPPP	UUUU	PPPP	PDDD	PPPP
Booths	Salix boothii	SABO2	PPPP	PPPP	PPPP	PPPP	PPPP	PPPP	PPPP	PPPP
Coyote (sandbar)	Salix exigua	SAEX	DDDD	DDDD	DDDD	DDDD	UUUU	DDDD	DDDD	DDDD
Drummonds	Salix drummondiana	SADR	PPPP	PPPP	DDDD	PPPP	UUUU	PPPP	PDDD	PPPP
Geyers	Salix geyeriana	SAGE2	PPPP	PPPP	DDDD	PPPP	UUUU	PPPP	PPPP	PPPP
Grayleaf	Salix glauca	SAGL	PPPP	PPPP	PPPP	PPPP	DDDD	PPPP	PPPP	PPPP
Interior	Salix interior	SAIN3	DDDD	DDDD	DDDD	PPPP	UUUU	PPPP	DDDD	DDDD
Peachleaf	Salix amygdaloides	SAAM2	PPPP	PPPP	DDDD	PPPP	UUUU	PPPP	PPPP	PPPP
Planeleaf (diamondleaf)	Salix planifolia	SAPL2	PPPP	PPPP	DDDD	PPPP	DDDD	PPPP	PPPP	PPPP
Pussy	Salix discolor	SADI	DDDD	DDDD	DDDD	DDDD	UUUU	DDDD	DDDD	DDDD
Scoulers	Salix scouleriana	SASC	PPPP	PPPP	DDDD	PPPP	DDDD	PPPP	PPPP	PPPP
Snow	Salix nivalis	SANI8	PPPP	PPPP	DDDD	PPPP	DDDD	PPPP	PPPP	PPPP
Tweedy	Salix tweedyi	SATW	PPPP	PPPP	DDDD	PPPP	DDDD	PPPP	PPPP	PPPP
Whiplash	Salix lucida ssp. caudata (syn. S. lasiandra)	SALUC	DDDD	PPPP	DDDD	PPPP	DDDD	DDDD	PPPP	DDDD
Wolf	Salix wolfii	SAWO	UUUU	UUUU	UUUU	UUUU	UUUU	UUUU	UUDD	UUDD
Yellow	Salix lutea	SALU2	PPPP	PPPP	DDDD	PPPP	UUUU	PPPP	PPPP	PPPP
Wintergreen	Pyrola spp.	PYROL	UUUU	UUUU	UUUU	UUUU	UUUU	UUUU	UUUU	UUUU
Wyoming Big sagebrush	Artemisia tridentata ssp. wyomingensis	ARTRW8	UUUU	DDDD	UUUU	PPPP	PPPP	DDDD	UUUU	NNNN

N = not used; U = undesirable; D = desirable; P = preferred; T = toxic

(a) Toxic In large amounts.
(b) Poisonous in spring before flowering.
(c) May be posonous after seedpods mature.
(d) Leaves are poisonous to sheep and cattle.
(e) Young shoots are poisonous.

Animal Community – Grazing Interpretations

The following table lists suggested stocking rates for cattle under continuous season-long grazing under normal growing conditions. These are conservative estimates that should be used only as guidelines in the initial stages of the conservation planning process. Often, the current plant composition does not entirely match any particular plant community (as described in this ecological site description). Because of this, a field visit is recommended, in all cases, to document plant composition and production. More precise carrying capacity estimates should eventually be calculated using this information along with animal preference data, particularly when grazers other than cattle are involved. Under more intensive grazing management, improved harvest efficiencies can result in an increased carrying capacity. If distribution problems occur, stocking rates must be reduced to maintain plant health and vigor.

Plant Community	Production (lb./ac)	Carrying Capacity* (AUM/ac)
Bluebunch Wheatgrass/Bitterbrush (HCPC)	1200-1800	.45
Bitterbrush/Black Sage	1000-1600	.3
Mountain Big Sage/Rhizomatous Wheatgrass	800-1400	.2
Three-Tip Sage	500-1200	.1

* - Continuous, season-long grazing by cattle under average growing conditions.

Grazing by domestic livestock is one of the major income-producing industries in the area. Rangeland in this area may provide yearlong forage for cattle, sheep, or horses. During the dormant period, the forage for livestock use needs to be supplemented with protein because the quality does not meet minimum livestock requirements.

Hydrology Functions

Water is the principal factor limiting forage production on this site. This site is highly variable and is dominated by soils in hydrologic group B and C, with localized areas in hydrologic group D. Infiltration ranges from slow to very rapid. Runoff potential for this site varies from moderate to high depending on soil hydrologic group, depth and degree of bedrock fracturing, slope, and ground cover (refer to Part 630, NRCS National Engineering Handbook for detailed hydrology information.)

Rills and gullies may be present, but should be small. Water flow patterns should be barely distinguishable. Pedestals are only slightly present in association with bunchgrasses such as bluebunch wheatgrass. Litter typically falls in place, and signs of movement are not common. Chemical and physical crusts are rare to non-existent. Cryptogamic crusts are present, but only cover 1-2% of the soil surface.

Recreational Uses

This site provides limited hunting opportunities for upland game species.

Wood Products

No appreciable wood products are present on the site.

Other Products

Supporting Information

Associated Sites

Shallow Loamy	R043BY162WY
Igneous	R043BY116WY

Similar Sites

R043BY260WY – Shallow Igneous (SwI) 15-19W has lower production.
R043BY116WY – Igneous (Ig) 20+M has lower production and less bitterbrush.

Inventory Data References (narrative)

Information presented here has been derived from NRCS clipping data and other inventory data. Field observations from range trained personnel were also used. Those involved in developing this site include: Bill Christensen, Range Management Specialist, NRCS; Karen Clause, Range Management Specialist, NRCS; and Everet Bainter, Range Management Specialist, NRCS. Other sources used as references include: USDA NRCS Water and Climate Center, USDA NRCS National Range and Pasture Handbook, and USDA NRCS Soil Surveys from various counties.

Inventory Data References

Data Source	Number of Records	Sample Period	State	County

State Correlation

Type Locality

Field Offices

Afton, Baggs, Buffalo, Casper, Cody, Cokeville, Douglas, Dubois, Fort Washakie, Greybull, Jackson, Kaycee, Lander, Laramie, Lovell, Lyman, Pinedale, Powell, Saratoga, Sheridan, Thermopolis, Worland.

Relationship to Other Established Classifications

Other References

Site Description Approval

_____ _____
State Range Management Specialist Date