U.S. DEPARTMENT OF AGRICULTURE Natural Resources Conservation Service	**MICROIRRIGATION GENERAL PLANNING WORKSHEET**	WV Eng WS 441B 07/12/09

General Introduction to WV Irrigation

Drip irrigation of row crops is increasing throughout the United States. This irrigation method has the advantage of precisely applying irrigation water in both location and amount, thus offering the potential of increased profit due to reduced water, fertilizer, and cultural costs and increased revenue due to increased yield. Originally, drip irrigation was used in landscapes, as a means to reduce water costs for homeowners and commercial sites. In agriculture, drip was first used to irrigate specialty crops like grapes and tree crops. Surface drip systems are used to maximize yield and quality by taking advantage of the management control provided by drip irrigation.

Water supply in WV can be a challenge because most wells are adequate for domestic water use or light livestock use, but many are not able to supply the required water necessary for orchard, vegetable or greenhouse irrigation. Microirrigation is the most preferred method of water application to plants because the operator can accurately control the amount and rate of water applied, the location as well as timing. It is designed to apply water slowly and directly to the root zone and the water is applied daily, to prevent moisture stress in the plant and to keep the soil moist.

Most of WV generally uses two types of irrigation. They are overhead sprinklers (solid set, traveling gun, etc.) and microirrigation. Overhead sprinklers water the entire crop field area every 2-3 days and have an application efficiency of 55% to 70%. Microirrigation directly applies water (daily) to the plant roots and at a 90% (very efficient) water application rate.

Advantages and Disadvantages of Microirrigation

As good as microirrigation is, it may not meet everyone's needs.

Advantages:

A) A smaller volume of water is required to supply the plants needs, (50% or less than sprinkler methods).
B) Lower operating pressures and lower flow rates, requiring less energy (smaller pumps) and less time of operation.
C) A high degree of water control is possible.
D) It can be used for various types of crops, i.e. bedded plants, orchards or greenhouses. It is very flexible.
E) Disease and insect damage is reduced because the soil is moistened, not the leaves.
F) Chemicals and fertilizers can be directly injected into the system, requires less chemicals.
G) Less labor and operating expenses.
H) Fields with slope can be designed with a uniform application using pressure compensated point source emitters or line source emitters, assuring equal amounts of water applied throughout the area.

I) Normally less weed growth since the water moistens the beds but not the area between the rows.
J) Work best with a plastic or mulch cover, further reducing water losses.

Disadvantages:
A) Small emissions orifices tend to clog more often.
B) Distribution area of moisture is limited. Sands have more vertical water movement (gravitational forces predominate) than clays, clays are more uniform and capillary action predominates
C) Microirrigation always requires a filtration system that must be often checked.
D) System cannot provide any frost protection.
E) Rodents and insects may damage pieces.
F) Not suitable for cereal grains or closely planted crops.
G) Higher level of management is required.
H) Initial investment and annual cost of maintenance may be higher.

The basic microirrigation system components are similar to other irrigation systems. However, as noted above, microirrigation uses much less water, is very efficient and is used daily to maintain soil moisture within the soil profile. Starting from at the water source the following is a list of typical items found on a system.

- Water supply or source (well, river, pond, other)
- Pumping Plant - Delivers water at a rate (GPM) and required pressure (ft or psi) must have two check valves on system if water supply is from a well.
- Filtration system - Filters water so the microirrigation won't plug.
- Main and Sub-main line - Distributes water from the pumping plant to irrigation system.
- Main Control Valve - Valve to submain(s) or manifold(s).
- Manifold or Header - Field/zone polyethylene or PVC line on which the irrigation laterals or tape are attached.
- Laterals (line source) or emitters (point source) microirrigation – Laterals are manufactured drip lines with a pre-selected emitter spacing and application rate (GPH/emitter). Emitters are individual drippers that are punched into a polyethylene flexible line (not pre-set). Either one delivers water to the plant at a predetermined rate and pressure requirement.

Filters

All drip systems require filtration of the water. The manufacturer specifies the required filter mesh size or opening measured in microns (filtration of 120 Mesh is equivalent to 125 Microns) which is placed downstream of the control valve. Most well water is relatively clean and so a typical disc and or screen filter is used. If the water source comes from a river or pond, in addition to the pump suction strainers, a centrifugal sand filter (10-12 psi) and a disc filter, (pressure loss typically 5 psi) may be needed for secondary protection.

Drip Tape Spacing and Configurations

For most vegetable or fruit crops, a single drip tape is placed in the bed under plastic. For wide beds (4 feet or wider), two tapes may be placed in the bed for a better wetting pattern. If the bed is on the contour, place the tape upslope of the seed or plant. Try to place the valve at the highest elevation in the row so the water flows down slope, this will aid in draining and flushing the tape.

The depth at which the drip tape is in the soil varies quite a bit. For the most part, drip tape is buried about 8 -30 cm. (3-12 in.) below the soil surface. Depending on soil type and past experiences, growers may vary this depth. If the tape is buried too deep, the amount of water required to germinate the seed may be prohibitive.

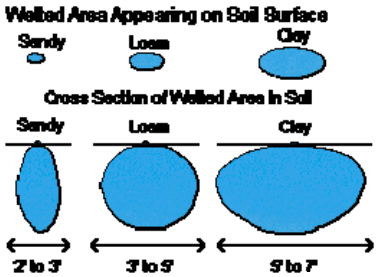

Another major factor when determining the type of lateral or dripperline is the spacing of the emitters. The type of soil more than the type of plant influences the emitter spacing. Every soil has a slightly different wetting pattern (see diagram to the right). Crops placed on heavy clay soils normally select emitters with a 30 cm (12 inch) to 46 cm (18 inch) spacing verses the lighter very sandy soils. Sandy soils usually require a 10 cm (4 inch) emitter spacing, because the water drains more vertically than horizontally. Again, these decisions are based on the soil type, soil amendments and the crops to be grown.

Because WV soils are typically clay or clay loam, most microirrigation tape selected for brambles, vegetables or flowers in West Virginia have a 305 mm (12”) spacing and either 6 mm (5/8”) or 22 mm (7/8”) in diameter. Most tapes selected in West Virginia are medium flow (0.45-0.6 GPM/100’ of tape), which supply the required amount of water to the plant in approximately one (1) hour. Low flow tapes may be selected when there is a limited rate (GPM) available to a crop or when more area needs to be irrigated (requiring a longer time to irrigate to meet crop consumptive use demand); however, they may tend to clog more frequently.

Microirrigation Drip Tapes or Laterals

There are numerous types of drip tape manufactured. Each manufacture will provide a general description, spacing, flow/100’ of length, emitter flow rate, allowable pressure variation, optimum pressure for 90% Emitter Uniformity (EU), diameter and thickness of the tape well the required filtration.

Many drip tapes are now on the market and offer a range of tape diameters, wall thickness, emitter spacing’s, and emitter flow rates and are either pressure compensated (PC) or not. PC microirrigation tapes are always required when any part of the planted row exceeds a 2 % slope.

The laterals (dripper tape or drip lines) provide water to the plants. The emitters on the lateral allow the water to discharge of at very low rates through small orifices. Emitters are divided into two categories; Point Source and Line Source, and are unique to

microirrigation. The line is either solid or manufactured with emitters set at various spacings.

<u>Point source emitters</u> are individual emitters manually placed/punched (by operator) into a plastic pipe.

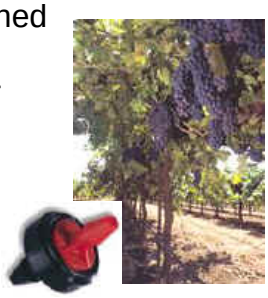

- Used mainly for fruit crops, tree crops, nursery containers or where crops are not evenly spaced or are spaced far apart.
- Have operating pressures 5-60 psi and application rates ranging from 0.5 to 2.0 gallons/per hour per emitter
- Require a 100 -200 mesh filtration unit.
- Depending on the terrain select for flat grades or hilly terrain (pressure compensated).

<u>Line source emitters</u> are pre-manufactured and embedded at equally spaced distances (6”-24”) with a uniform flow rate.

- They are for closely spaced crops such as vegetables, small fruit or irrigation mats in greenhouses (emitter spaced from 4” – 24”).
- Operating pressure ranges from 10-30 psi, 10 psi is most typical.
- Discharge rates ranging from 0.1 -1.0 GPM/100’ feet of line.
- Require a 120 -200 mesh filtration unit.
- Line source emitters are normally used on level ground with lines installed in rows up to 300 feet long (limited by ground slope and carrying capacity).
- On rolling or hilly terrain (2-10% slope), a Pressure Compensated Line Source must be selected. These have emitters that supply the same flow rate over a wide range of line pressure.

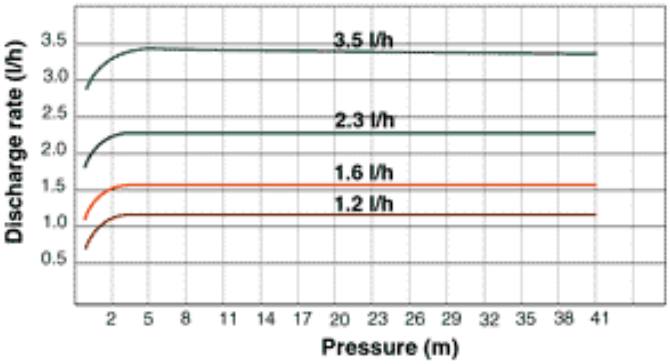

<u>Distribution Lines</u>

The water distribution is a network of main, submain pipes in graduated sizes. Water at the well or pump is carried to the edge of the field by a single large line called the main. Smaller submains or manifolds carry the water to the microirrigation lateral lines. The lateral lines may be line source or have point source emitters as discussed above and may be pressure compensated or not. Below is a chart that provides a quick reference for general planning of the size of a manifold, submain and main lines.

FOR A FIELD OR ZONE PIPELINE TYPICAL FLOW (MAX. 5 FT/SEC) FOR MANIFOLD, SUBMAIN OR MAIN PIPE DIAMETER.							
Manifold PE SDR 15	1/2" Dia.	3/4" Dia.	1.0" Dia.	1.25" Dia.	1.5" Dia.	1-1/2" Dia. Lay Flat (Max. 21 PSI)	2" Dia. Lay Flat (Max. 21 PSI)
Max. GPM	4	8	13	22	30	24	40
Main/Submain Sch 40 PVC	1/2" Dia.	3/4" Dia.	1.0" Dia.	1.5" Dia.	2.0" Dia.	3.0" Dia.	4.0" Dia.
Max. GPM	4	8	12	38	50	110	190

The thicker the microirrigation tape (lateral) wall thickness the more durable (but stiffer) it is. The thickness depends on how the grower plans to use the tape. If a grower plans to re-use the lateral, permanently bury (blackberries) it or suspend it as in a vineyard, a a 12-16 mil thickness normally is selected. A "one time" use lateral would typically be 6-8 mil tape. Table 1 and Table 2 provide typical manufacturer information, tape characteristics, specifications for various tapes, diameters, spacing and flow rates of microirrigation tapes.

The quality of the majority of drip tapes is generally excellent as shown in Table 3. Coefficients of manufacturing variation generally are less than 0.05. Emitter discharge exponents generally are between 0.50 and 0.60. Filtration requirements of 120 to 200 mesh is recommended for most of the drip tapes.

Drip tape can be buried or installed on the surface. Installation and extraction equipment is available for drip tape. Several manufacturers offer a method of heat-welding tape to repair leaks and to couple tape as it is extracted from the field.

Therefore, when planning a microirrigation system, consider the quality, rate and quantity of water delivered by the source location. Verify the required amount of water is available throughout the flowering and growing season, especially during drought conditions. Not only is the amount of water delivered daily to the crop important, but how uniform the water is applied is of equal importance. An improperly selected dripline may provide water to all of the plants, but some may get to much and others too little or none at all. This will impact the overall quality and quantity of the crop, wasting precious resources and time. So take the time it takes, select the correct system so it can run at the best possible conditions providing optimum yields.

U.S. DEPARTMENT OF AGRICULTURE Natural Resources Conservation Service	**MICROIRRIGATION GENERAL PLANNING WORKSHEET**	WV Eng WS 441B 07/12/09

GENERAL MICROIRRIGATION INFORMATION

Example of a typical microirrigation layout:

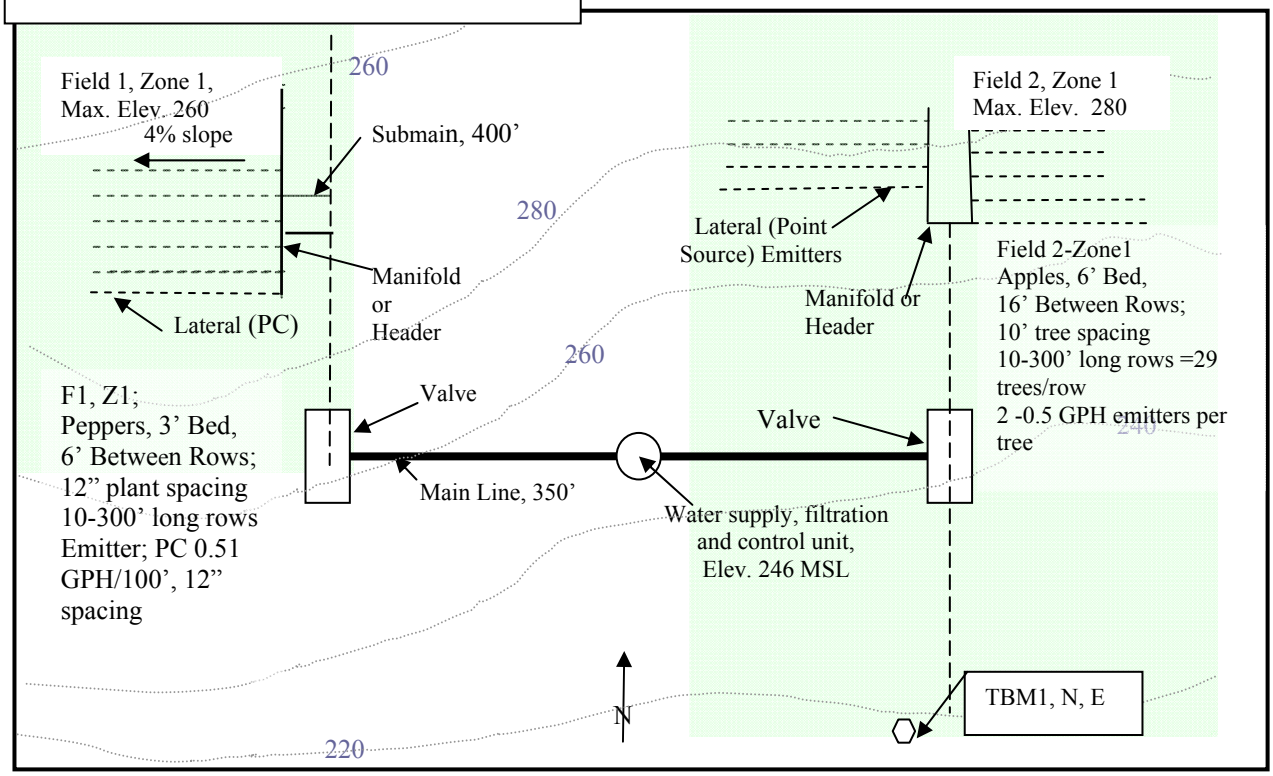

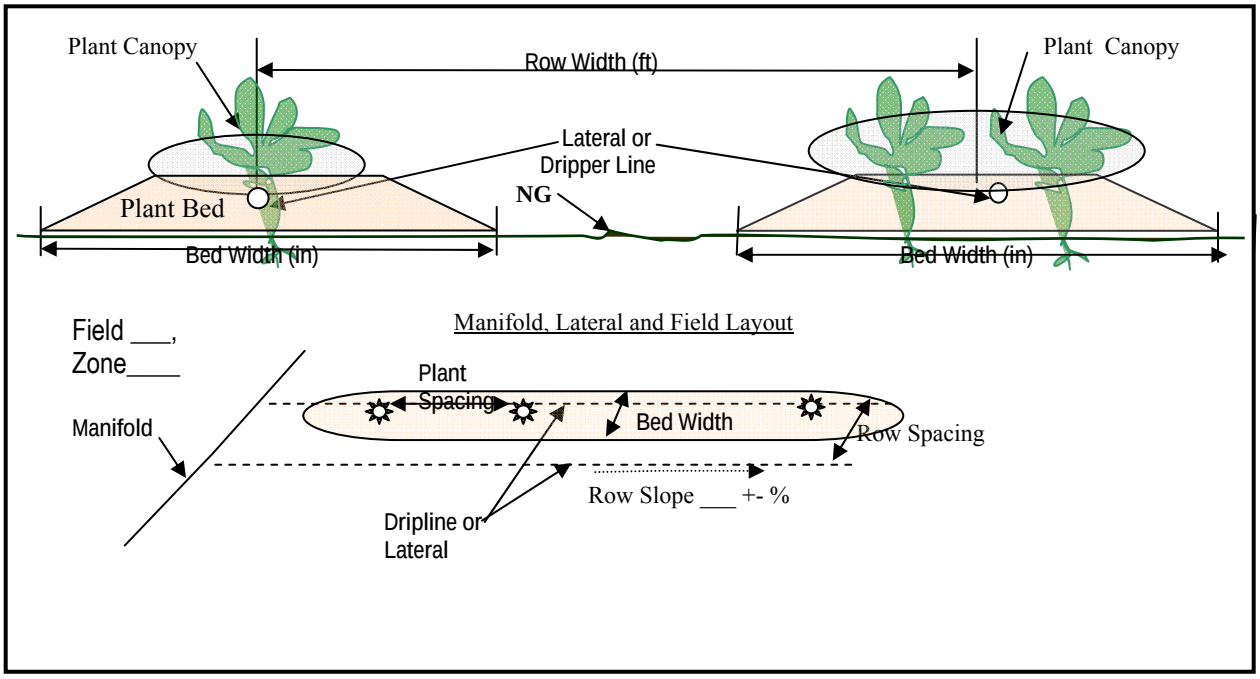

U.S. DEPARTMENT OF AGRICULTURE Natural Resources Conservation Service	**MICROIRRIGATION GENERAL PLANNING WORKSHEET**	WV Eng WS 441B 07/12/09

Answer the following questions to begin the microirrigation planning process and follow the guidelines 1-4 to determine the required amount of water needed for a specific crop (gallons/day) as well as the application rate (GPM) and duration of irrigation (hours/day).

Microirrigation Preliminary Planning Information :

1) Have you gathered general information required for microirrigation planning such as soil maps, topographic maps (NRCS can provide this to the landowner), location and layout of crop rows, information about the crop (fruit, vegetable or nut crop) that will be irrigated and water source location.

2) How much water does the microirrigation need to provide to the crop daily (Gallons/day)?

3) What is the rate (GPM) of application (based on the type of microirrigation selected)?

4) How long should the irrigation run (minutes or hours per day) to deliver the required amount of water to the plant (GPD)?

1) Gathering Basic Information

   a) NRCS can assist with planning the microirrigation system, but first , the following information must be gathered to determine if the microirrigation system and water supply will meet your specific crop needs (circle or fill in the blank).

   b) Land Owners Name: _____ County: _____ F.O. _____, WV

   c) Outline the planned irrigation areas (usually smaller than the field) on a topographic map and locate the water source. Provide a general plan map showing the planned row direction, number of rows and the average row length. Draw or locate the preferred location of the manifold (attaches to the dripline), submain (attaches to manifold) and main lines may be located (if known).

   d) What is the soil like in these area(s)? Clay, Sandy Clay, Karst, rocky, high water table, other____? Attach soil map with the soil name and provide various chemical, engineering and limitation features (refer to WVEngWS 441 442 F Soil Water Holding Capacity).

   e) Is the general terrain flat, hilly or steep? _____ (provide slope and spot elevations irrigation rows, maximum and minimum low and high elevations within total area, water source and pipeline as required for final design).

   f) Is there a elevation change within the plant rows? Yes, No. Is it more than 2 feet for every 100 feet? Yes, No. If yes, a pressure compensated emitter and/or dripline (lateral) is required.

   g) Will the crop rows' be placed on the contour? Yes, No. If not, why not? _____

   h) What is the difference in elevation from the well or source of water to the highest and lowest point in any of the fields where water will be delivered? highest (+____ FT); lowest (-_____ FT)

i) What is your source of water? well, spring, pond, river, other_____. If a well, supply certified well drillers report and estimated _____ GPM; Dry weather spring _____ GPM; Dry weather pond volume _____ gallons (above 4.0') with a _____ ac. Watershed; River or Stream Name_____, average velocity at low water _____ ft/sec and _____ width. What is the maximum duration of pumping? _____ hours/day

j) Will the water source be used for multiple purposes? Yes, No. If Yes, How many gallons per day is required from the other purpose? _____ gal/day.

k) How dependable is the water source during a drought? _____

l) Do you know the history of the water supply?

m) What is the quality of your water? Does it stain or have iron in it?____ Is it cloudy?____ Is there algae in it?_____ Is there a filter on it?_____ Has it ever gone dry?_____ Filtration is required for all systems and depends on the source of water and manufacturer recommendation. All ponds require sand filters to remove algae with a secondary mesh filter.

n) Do you have an existing pump? Yes, No. If yes what is the _____type, _____ make, _____ HP, _____Model _____number, ____ pump curve and _____ age? What is the elevation of the pump relative to natural ground? _____ .

o) Do you know the available pressure at your pump? _____ PSI. Do you have a pressure tank on the system? _____ If so how large is it _____ gallons and what is pressure _____ (psi) rating.

p) What is the distance from the water source to the furthest irrigation or watering tank?_____ Ft.

q) Will the system be automated (electrical) or manually operated? _____

r) Will fertilizer or chemicals be injected into the system? Yes or No

s) Are there any other concerns or needs that need to be reported? _____

t) Fill in the Chart 1 below. Include crops grown throughout the season.

CHART 1- BASIC CROP INFORMATION								
Name of VEG., FRUIT, BERRY, TREE, ETC.	Planting and Harvest Date	Field Zone/ Name:	Plant Spacing in Bed (in)	Bed Width (BW) (in)	Row Width (RW) (ft)	Row Length (RL) (ft)	Number of Rows (No.)	Total Row Length (ft) RL x No.

u) Now that the basic information is gathered, document the microirrigation manufacture information for the dripline you prefer and/or contact your irrigation supplier and supply them with the above information.
   i) Manufacture Name:_____
   ii) Pressure Compensated Required? Yes or No
   iii) Will the emitter(s) be a Point Source _____
   iv) Will the emitter(s) be Line Source_____
   v) Diameter: _____
   vi) Thickness (mil)_____
   vii) Emitter Spacing _____
   viii) GPM/100'_____
   ix) GPH/Emitter _____
   x) Recommended Pressure _____PSI
   xi) Manufacture Filtration Requirements _____ mesh _____ micron

2) How much water does the crop require daily (GPD)? To estimate the required daily water required daily (Gallons/day) to meet your specific crop needs. The total amount of water needed to irrigate a crop is based on the "Average Daily Peak Consumptive Use (ADPCU" for a Specific Crop (SC). This is amount of water used by the plants (transpiration) plus water lost from evaporation, together called evapotranspiration (ET). The ET is maximum on a sunny, hot, long daylight day. For a most crops in WV, an estimated ADPCUSC is 0.2"/day (WV ENG WS 441A). For microirrigation systems only, the volume of water required to irrigate the plant is determined by knowing the type of crop, location and the plant's canopy diameter or plant bed width (which ever is greater).

a) Chart 2 below estimates the gallons of water needed per day for an orchard or vegetable crop requiring 0.2''/day and a vegetable crop requiring 0.18"/day (Reference WV ENG WS 441A).
To calculate the Crop Microirrigation Water Needs (CMN), convert ADPCUSP (in/day) to feet/day, multiply by the area to be irrigated (SF) and 7.48 Gal/CF, then divide by the irrigation efficiency.

CHART 2 –DETERMINE GALLONS OF WATER NEEDED USING MICROIRRIGATION AND 100% BED WIDTH WATERED DAILY AT 90% APPLICATION EFFICIENCY.

(A) Bed Width (FT)	(B) Row Length (FT)	(C) No. of Rows	(D) Area to be Irrigated (SF)	(E) ADPCUSC* (In/Day)	(F) ADPCUSC (FT)	(G) Required Crop GPD (Gallons/Day)

* (E) = WV NRCS Average Daily Peak Consumptive Use for a Specific Crop (WV ENG WS 441A)
D= A X B X C; E= ADPCU X SC F= E/12; G= D X F X 7.48

3) <u>What is the Rate of Application?</u>
The microirrigation manufacturer's information (specifications) provide the emitter rate of application required (GPM) for a specific pressure. They will provide you information such as the required pressure (at the point in the field required to deliver the water), the efficiency of the system, the rate of application (GPH/emitter or GPM/100"), the emitter spacing on the line (typ. 12 " in WV), the required filtration unit and other pertinent data such as the application efficiency (90%).

a) Estimate for the Rate of Application (RA) for each zone;
   i) Field #_____ and Zone# ____
   ii) Microirrigation Emitter Application Rate (AR) _____ GPM/100' (according to manufacture) or GPH/emitter
   iii) Total length (TL) of laterals within the zone _____ (FT)
   iv) Rate of Application (RA) GPM=

RA _____ GPM = $\frac{\text{AR } _____ \text{ GPM/100' X } _____ \text{ TL (FT)}}{100}$

RA _____ GPM = $\frac{\text{AR Emitter } _____ \text{ GPH X } _____ \text{ Number of Emitters}}{60 \text{ min/hr}}$

Estimate the size of the PE manifold line that will serve the laterals in each zone.
Field #_____, Zone No._____, RA_____ GPM, PE _____ Diameter (inches)

4) <u>How many hours/day should the crop be irrigated when no rainfall occurs?</u>

a) The amount of time to irrigate (MI Time) the crop is determined by knowing the amount of water to be applied daily GPD (see above graph) and dividing it by the Rate Application (RA GPM) and the efficiency of the microirrigation (normally 90%).

$\frac{_____ \text{ Required (GPD)}}{(_____ \text{ RA (GPM) x } 90\%)}$ = _____ Min/day = _____ Min. /day /60 = _____Hours/day

5) Repeat for all the zones and summerize in Chart 3.

CHART 3: ZONE/FIELD IRRIGATION (GPM); ZONE/FIELD IRRIGATION TIME (HOURS/DAY); EST. PIPELINE DIA.						
Field No	Zone No	Crop GPD (Gal/day)	RA Microirrigation rate of application (GPM)	MI Time Hours per day to irrigate (90% Eff.) (hr/day)	Estimated PE manifold dia. (inches)	Estimated PVC Submain or main Dia. (inches)

EXAMPLE

1) Irrigation Zone F1,Z1- Pepper crop planted in 3.0' beds with 6' wide rows and there are 10 rows; 300' long. The bed slope is 4% and will be 100% watered. A pressure compensated microirrigation line source emitter is chosen and it delivers 0.45 GPM/100' (AR). System is irrigated from a well.

   a) F1, Z1-How many gallons per day (GPD) of water is applied?
      i) Peppers ADPCUSC = 0.2"/day water X 0.9 (Crop Coefficient) = 0.18 (WV ENG WS 441 A);convert to 0.015 Ft/day
      ii) Crop area irrigation area is 3 ft wide x 30 ft long rows x 10 rows = 900 SF area to be irrigated
      iii) Daily Crop Microirrigation Volume (GPD) =ADPCUSC (Ft/day) X Irrigated Area (SF) X 7.48 Gal/CF= 0.015 Ft/day X 900 SF X 7.48 Gal/CF = 101 Gal/day
   b) What is the Rate of Application (RA) for F1,Z1 in GPM.
      i) The RA is equal to the AR of line (0.45 GPM per 100) X 30 Ft long rows X 10 Rows /100 Ft = 1.35 GPM or 1.4 GPM)
   c) What is the required well pump rate for R1,Z1 irrigation system (reference WV Conservation Practice Pumping Plant (533))?
      i) The well pump should deliver 125% of RA = 1.35 GPM x 125% = 1.68 or 1.7 GPM
   d) How many hours/day will F1,Z1 be irrigated (when no rainfall occurs) with a application efficiency of 90%?
      i) MI Time = 101 GPD / (1.35 GPM x 90%) = 83 minutes/day = 1.4 hours/day

2) Irrigation Zone F2,Z1- Apple trees spaced 16' X 10'; rows are 16 ft. apart, trees planted 10 ft apart. There are 12 rows of tree, rows are 200' long with 1% to 2% slopes. Two point source emitters (1.0 GPH/emitter) irrigate each tree. System is irrigated from a well.

   a) F2,Z1 - How many gallons per day (GPD) of is be applied?
      i) Apples ADPCUSC = 0.2"/day (ADPCU) water X 1.0 (SC) = 0.2/12 = 0.0167 ft/day of water
      ii) Canopy diameter of mature tree is 5 feet; irrigation area per tree is ((5/2) x (5/2) x 3.1425) = 19.6 SF area
      iii) How many GPD does each tree need? Each tree requires 0.0167 ft/day x 9.6 SF/tree x 7.48 Gal/CF = 2.4 GPD irrigation water.
      iv) The rows are 200 ft. long, trees are planted 10 ft. apart so there are 21 trees per row ((200/10) + 1).
      v) There are 21 trees/row x 12' rows = 252 trees;
      vi) The zone irrigates 252 trees and each tree receives 2.4 GPD = 252 trees x 2.4 GPD = 605 GPD
   b) What is the Rate of Application (RA) for F2,Z1?
      i) Two point source emitters (1.0 GPH/emitter) are placed at each tree = 2 X 1.0 GPH = 2.0 GPH/tree.
      ii) The RA = 252 trees x 2.0 GPH/tree = 504 GPH = 8.4 GPM
   c) What is the required well pump rate for R1,Z1 irrigation system (reference WV Conservation Practice Pumping Plant (533))?
      i) The well should deliver 125% of RA = 8.4 GPM x 125% = 10.5 or 11 GPM
   d) How many hours/day will F2,Z1 be irrigated (when no rainfall occurs) with an efficiency of 90%?
      i) MI Time = 605 GPD /(8.4 GPM x 90%)= 80 minutes/day = 1.3. hours/day

Consideration must be given to the water source location (pumping plant) and it's rate of delivery. Verify it can deliver the required rate and volume of water for crop growth during drought conditions. This may limit the number of zones to be irrigated. The above example indicates F1,Z1 requires 1.4 GPM and F2,Z1 requires 8.4 GPM. If both are zones are irrigated at the same time, they require 9.8 GPM and the well should be able to provide 12.25 GPM. The maximum duration for a well of this capacity is 8 hours per day. This allows for well recharge. If the irrigation well cannot deliver the required rate of water, then consider splitting the system into more zones.

TABLE 1. TYPICAL MICROIRRIGATION TAPE INFORMATION									
TYPICAL Tape Diameter (1MM = 0.03937 INCH)									
mm	10	12	16	22	35				
Inch	0.39	.48	0.63	0.875	1.37				
Fraction In	2/5	1/2	5/8	7/8	1 3/8				
TAPE EMITTER SPACING (1MM = 0.03937 INCH)									
mm	102	203	305	406	610				
Inch	4	8	12	16	24				
Typical Flow Rates (1 Liter/Hr = 0.264172 Gal/Hr)									
Liter/hour	.53	.79	.91	.57	2.27	.4	1	1.2	1.8
GPH	.14	.2086	.240	.1505	.5996	.1056	.2641	.3170	.4755

TABLE 2. TYPICAL MICROIRRIGATION MANUFACTURER* INFORMATION

Typical Manufacturer (Drip Tape Name)	Diameter (inch)	Wall Thickness	Emitter Spacing in Tape (in)	Flow Rate gpm/100'
Trickle-eez (T-Tape), 150 filtration (0 % slope w/ 90% EU) @ 8 psi , 12" spacing	5/8"	4, 6, 12, 15 mil	8 12	0.34 0.22
Netafim -(UniRam Heavywall)- Vineyards, undulating fields; 0.42 GPH/ emitter; 120 Mesh Filtration; 90% EU @ 7-60 psi	5/8", 7/8"	17 mm	18 24 36	0.47 0.35 0.23
ToroAg (Aqua-Traxx); 0.27 GPH / emitter, 200 Mesh Filtration, (0 to 1.0% slope with 90% EU) @ 10 psi, 12" spacing	5/8"	4, 6, 8, 10, 12, 15	8 12 24	0.67 0.45 0.22
ToroAg (Aqua-Traxx PC); 0.27 GPH / emitter; 200 Mesh Filtration (4-25 psi operatoring pres.with 90% EU), 12" spacing	5/8", 7/8"	8,10,12,15	8 12 24	0.67 0.45 0.22
Queen-Gil; 0.85GPH/emitter, (-2.00 to 2.0% slope with 90% EU)@10psi	5/8"	6, 8, 10,12, 16 mil	8" 12"	0.13 (low); 0.66 (med); 1.0 (high) 0.51 (med); 1.0 (high)

* No manufacture is endorsed by NRCS; the above information is only used for example.

TABLE 3. PERFORMANCE CHARACTERISTICS OF DRIP TAPES

Manufacturer (Drip Tape Name)	CVa	x[b]
T-Systems International (T-Tape)	0.03[c]	0.50-0.52[c]
Netafim (Streamline, Typhoon)	0.03[d]	0.44-0.48[d]
Roberts Irrigation Products (RO-DRIP)	0.03[d]	0.52, 0.57[d]
ToroAg (Aqua-Traxx)	0.02-0.04[d]	0.50, 0.54[d]
Queen-Gil <0.05	[d]	0.56[d]

[a] Coefficient of Manufacturing Variation; [b] Emitter Discharge Exponent; [c] Obtained from CATI Publication 990102, Irrigation Equipment Performance Report – Drip Emitters and Microsprinklers, CIT- California State University, Fresno; [d] Supplied by manufacturer