Form 1220-5
(January 1974)

T/N 305
Filing Code 6720-4112

Date Issued September 1977

TECHNICAL NOTE

U.S. DEPARTMENT OF THE INTERIOR - BUREAU OF LAND MANAGEMENT

GUIDELINES AND RECOMMENDATIONS FOR DESIGN AND MODIFICATION OF LIVESTOCK WATERING DEVELOPMENTS TO FACILITATE SAFE USE BY WILDLIFE

By Lanny O. Wilson
Wildlife Biologist
Idaho State Office

Illustrated by David Hannans
Cartographer
Idaho State Office

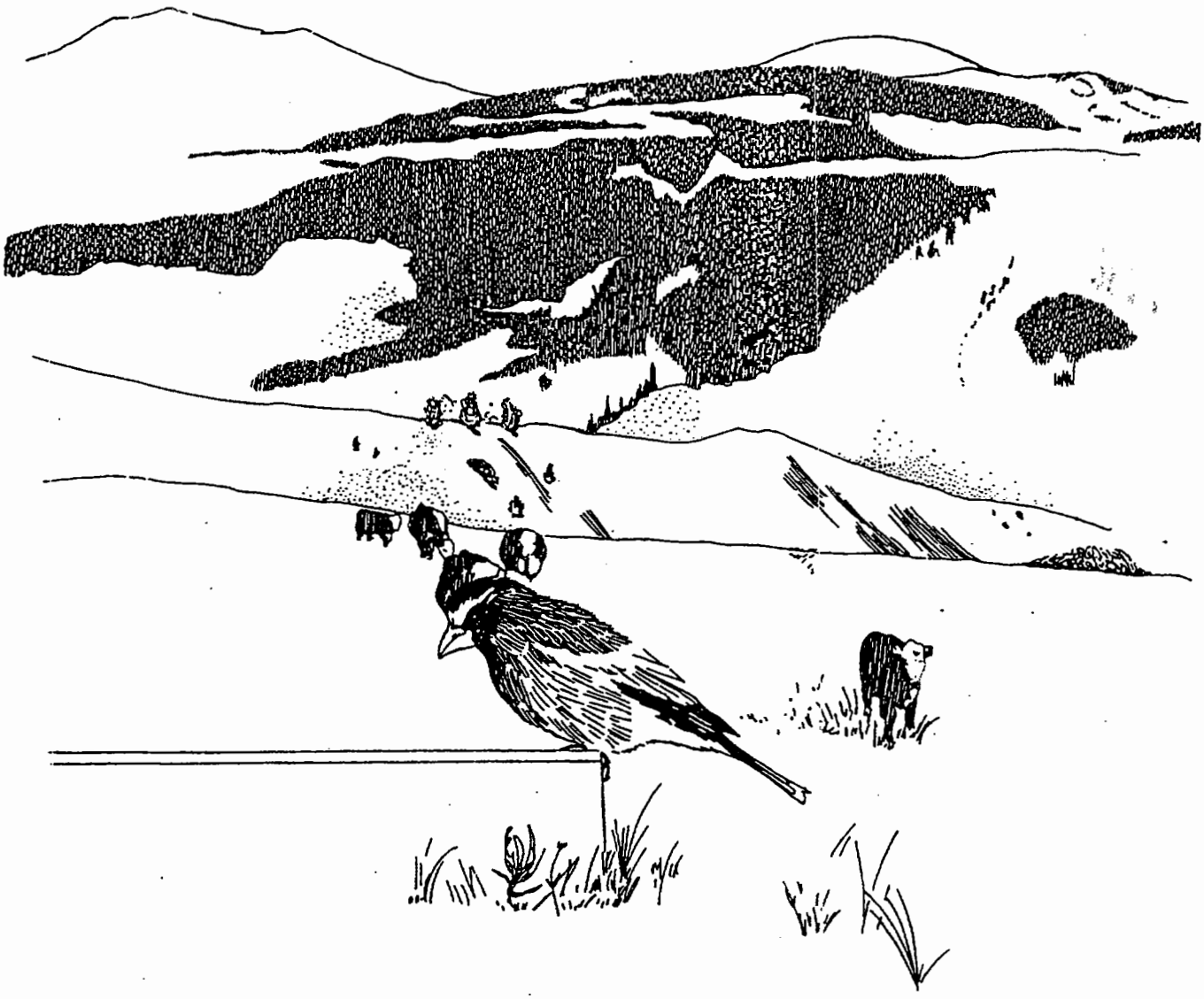

Additional copies of Technical Notes are available from DSC, Federal Center Building 50, Denver, Colo., 80225

Introduction

All livestock developments should be constructed to provide water both safely and continually to wildlife. To accomplish this, and to minimize the drowning of small wild animals trapped in deep water, numerous types of exit ramps and floating platforms have been designed for installation in and around livestock watering facilities. Because the Bureau of Land Management (BLM) had no standards for such platforms, ramps, and other developments to provide water for wildlife, each BLM district was asked to submit plans, drawings, photographs, and narratives concerning techniques then in use by field offices. This Technical Note was prepared from the district submissions. All contributors, who are too numerous to mention, are hereby acknowledged for their interest in better wildlife habitat management on BLM-administered lands.

General Guidelines

The primary purpose of developing livestock watering facilities is to provide water where it is scarce, intermittently available, or lacking completely. Any time a new source of water is developed in such an area, there is potential not only for increasing livestock use but also for greater wildlife carrying capacity. Some wildlife species, most notably large ungulates, often expand their ranges in response to water developments, provided the water is easily accessible.

Rarely, however, are livestock water developments located in areas where terrain and cover conditions promote maximum utilization by wildlife. Thus separate watering opportunities for wildlife should be provided in association with other water developments. This can be accomplished in a number of ways, such as piping water into smaller troughs or to areas where water might collect naturally and create a seep surrounded by suitable cover vegetation.

Fencing of such wildlife water facilities in a manner which will allow wildlife use, but exclude livestock, is nearly always necessary to preserve water quality and to ensure growth of adequate protective cover. This is most easily and aesthetically accomplished through the use of pole or buck and pole fences as opposed to wire fences.

Although migratory animals may use a particular water development only during certain seasons, most resident animals require water on a continuing basis. The development of water facilities for livestock carries with it an obligation to provide water year round for the wild animals that are attracted. Thus water should be available in all BLM watering facilities at all times, except in those areas where freezing during the winter could result in damage to the facility. This would prevent animals from being placed under stress or dying of thirst when water is suddenly shut off at facilities far from existing natural sources of water.

Livestock Trough Modifications

Immature wild ungulates (fawn deer, bighorn sheep lambs, calf elk, etc.) cannot utilize watering facilities that exceed 20 inches above ground level (illustration 1). Wherever ground-level wildlife drinking facilities are not provided in association with other water developments, the height of livestock troughs or other containers must not exceed 20 inches. Larger troughs may be set below ground level to reach the desired height (illustration 2).

Often cattle, domestic sheep, and other large ungulates will push, crowd, or fight adjacent to a water facility. With the lip of the trough 20 inches above ground level there is the possibility of some ungulates (e.g., domestic sheep, calves, fawn deer, antelope, etc.) falling into the trough. If the water level exceeds 20 inches, the animal may not be able to reach the bottom and stand.

Consider installing safety barricades in all livestock watering developments to prevent accidental entry (illustrations 3a and 3b) and possible drowning. The horizontal distance from the rim of the trough to the barricade also must not exceed 20 inches.

In addition, escape from a trough by a large ungulate may be more difficult than an accidental entry. Consider installation of concrete blocks and/or rocks to form escape ramps in all livestock water facilities where water depth exceeds 20 inches (illustration 2).

When the lip of a trough is more than a few inches above the ground, use by small wildlife species (rabbits, squirrels, birds, etc.) is often precluded. If the quantity of water is insufficient to provide separate livestock and wildlife developments, the livestock facility must serve a dual role. This can be accomplished by constructing wildlife ladders which lead into water facilities (illustrations 4, 5, and 6). These ladders can be constructed of expanded metal or rebar and hardware cloth and should be protected by posts or protective fencing. Without this protection, large ungulates can easily damage the ladders and may even injure themselves. Protective fencing will also permit vegetation to grow adjacent to the water facility thereby providing cover for wildlife.

An alternative method of providing access by small animals to raised troughs is to construct concrete ramps or rock ramps topped with concrete (illustration 7). Advantages of such ramps include minimal maintenance and decreased chance of injury to livestock. Protective fencing would be optional if concrete/rock ramps are used.

Perhaps the most important open trough modifications to protect small wildlife are escape ramps or ladders installed inside the troughs. Illustrations 8 and 9 show the recommended wildlife escape ladder construction for most types of livestock troughs. Dimensions can be changed accordingly, but the following general design guidelines should be followed.

Birds, lizards, rodents, rabbits, and other small animals generally swim the circumference of a tank trying to find their way out. Therefore, wildlife escape ladders must be constructed and installed to intercept the line of travel around the edge of the tank (illustrations 10 and 11). Improper screening may result in animals being trapped and drowned unnecessarily (illustration 12).

All wildlife escape ladders should be attached to the watering facility by a hinge or bracket to facilitate trough and ladder cleaning and to reduce the possibility of the ladder being stolen or otherwise removed (illustration 9). The recommended brackets have proved to be more effective than hinges. If not installed properly, hinges tend to bind and will break with prolonged use.

Wildlife escape ladders should have a minimum slope of 30 degrees, but the incline should not exceed 45 degrees (illustrations 8 and 9). Many small birds cannot negotiate a ladder with a slope over 45 degrees once their feathers become soaked or they are near exhaustion. Basically, the more gradual the slope of an escape ladder (within the limits stated above), the more effective it will be.

A minimum of one escape ladder per 30 linear feet of trough perimeter should be installed (illustrations 10 and 11). Existing data indicate that many small animals become exhausted and drown if forced to swim more than 30 feet.

It is possible to make wildlife escape ramps or ladders serve purposes other than wildlife protection. In water facilities where float valves are installed, the escape ramp may provide a protective cover for the valve, as well as a safe landing from which animals can drink and a method by which trapped animals can escape (illustration 13).

Open Storage Tank Modifications

In many grazing areas large open water storage tanks are used, the majority of which are out of reach of livestock, big game animals, and most small wildlife species (except birds and bats). The livestock trough modifications described in the previous section are impractical,

and in most cases unnecessary, in storage tanks, but some provision to allow trapped birds to escape the deep water is needed.

A floating wildlife platform should be installed in all large open water storage tanks (illustrations 14 and 15). Such a platform will allow birds both to escape and to drink.

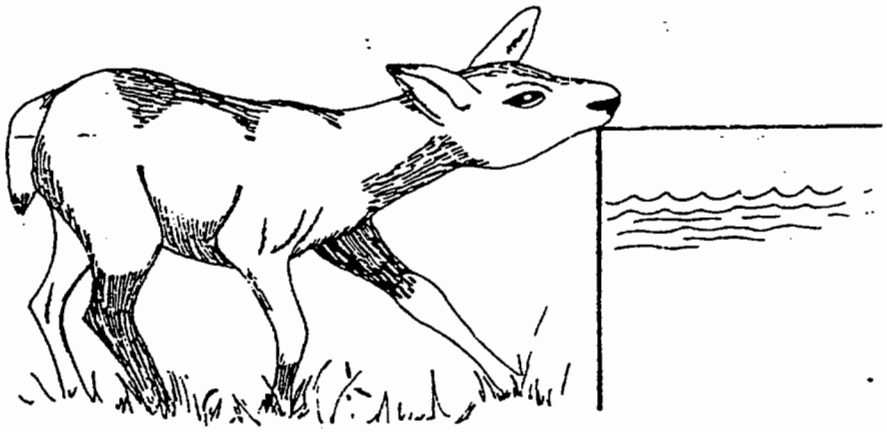

TROUGH HEIGHT ABOVE 20 IN WATER NOT AVAILABLE

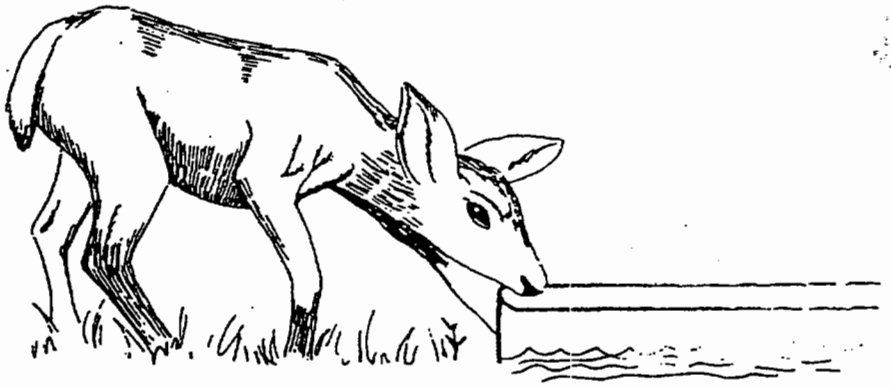

TROUGH HEIGHT 20 IN OR LESS WATER IS AVAILABLE

ILLUSTRATION 1 These two drawings illustrate the need for trough height not to exceed 20 inches above ground level.

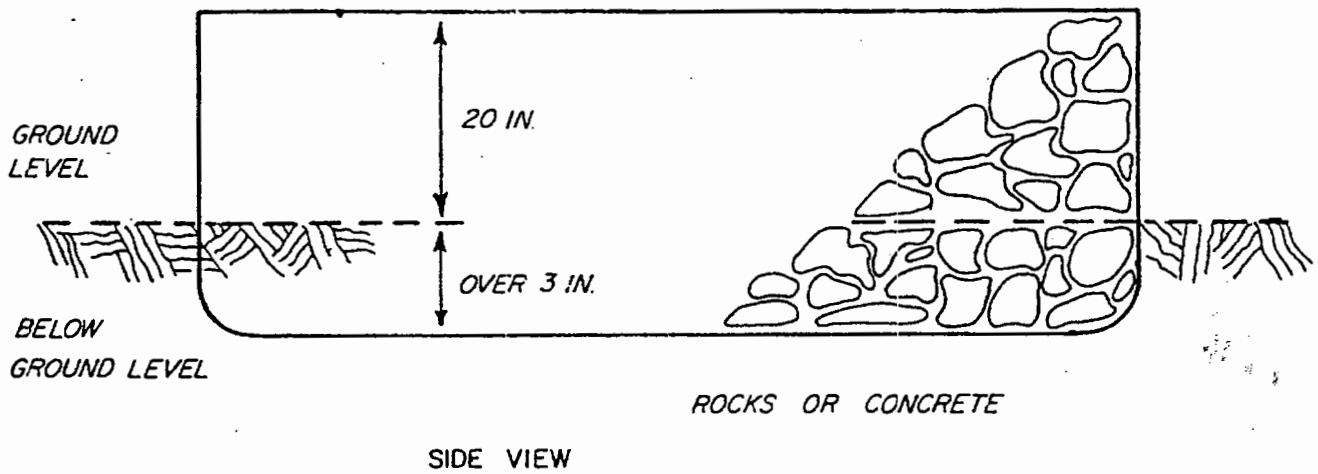

ILLUSTRATION 2 Placing of rocks, concrete blocks or other ramp facilities provide an escape route for large ungulates. where the water depth exceeds 20 inches

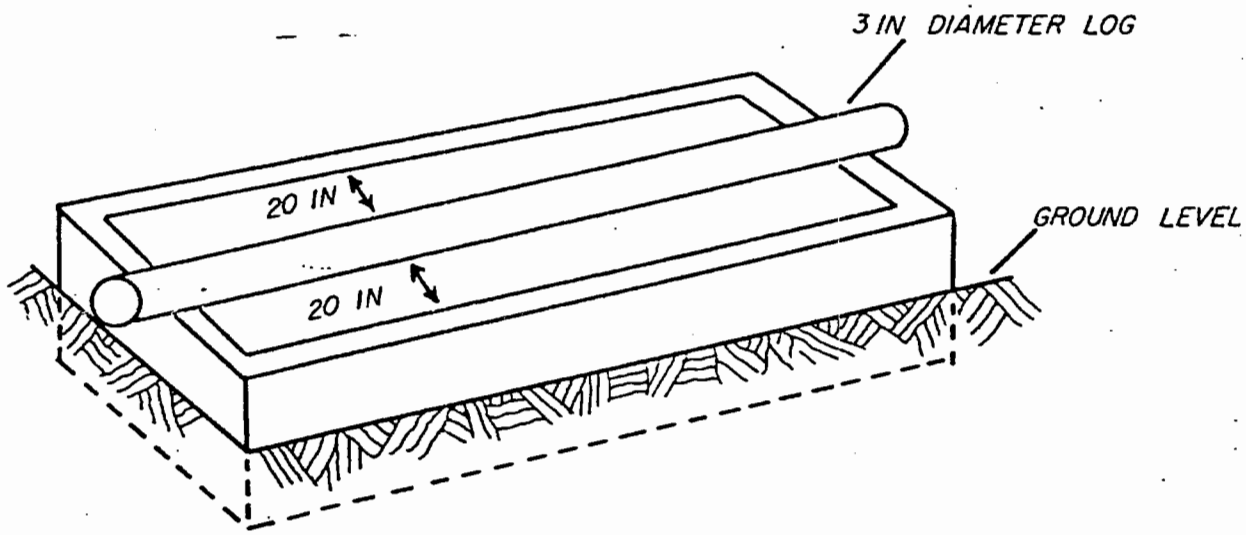

ILLUSTRATION 3a. Possible baracade developements depending on livestock trough configuration.

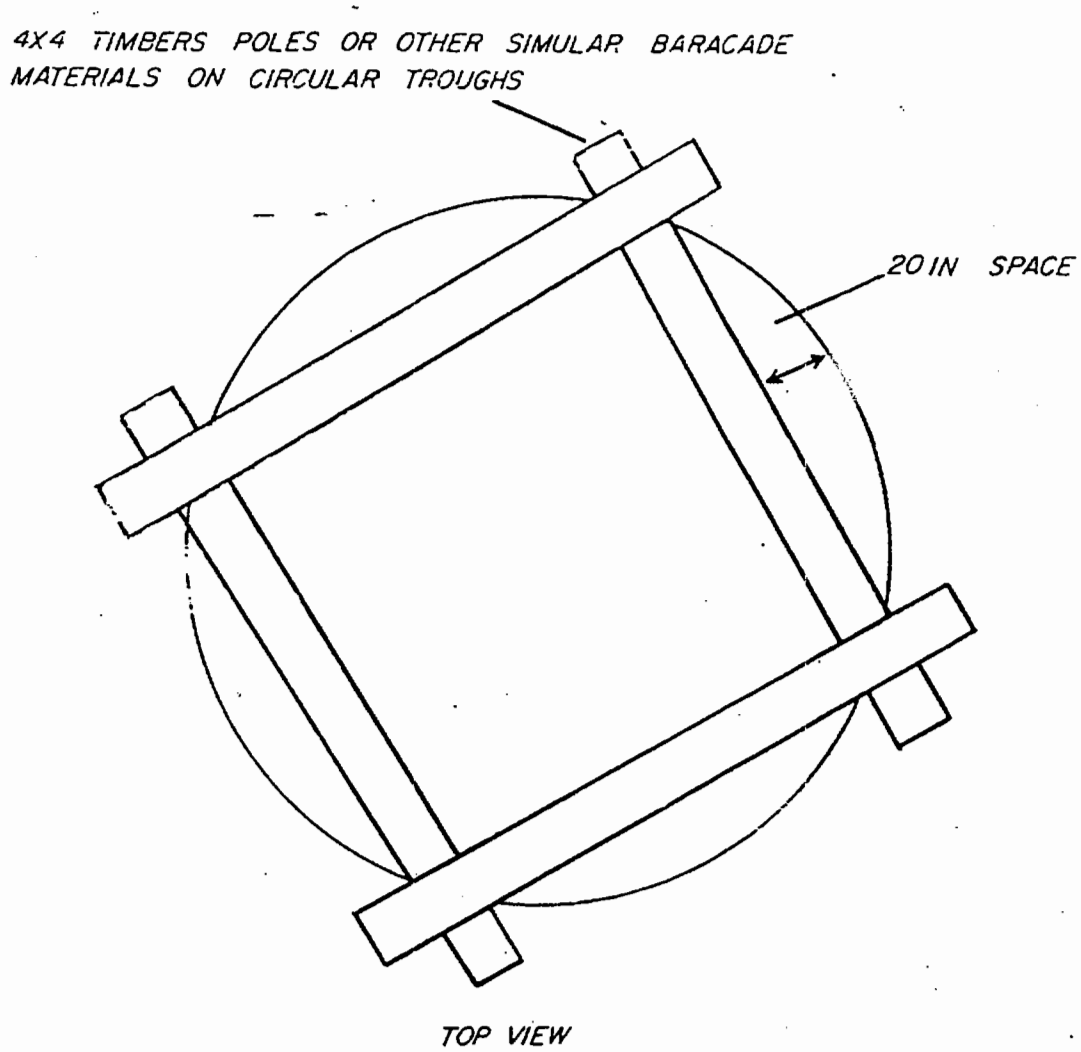

ILLUSTRATION 3b Possible baracde developements depending on livestock trough configuration.

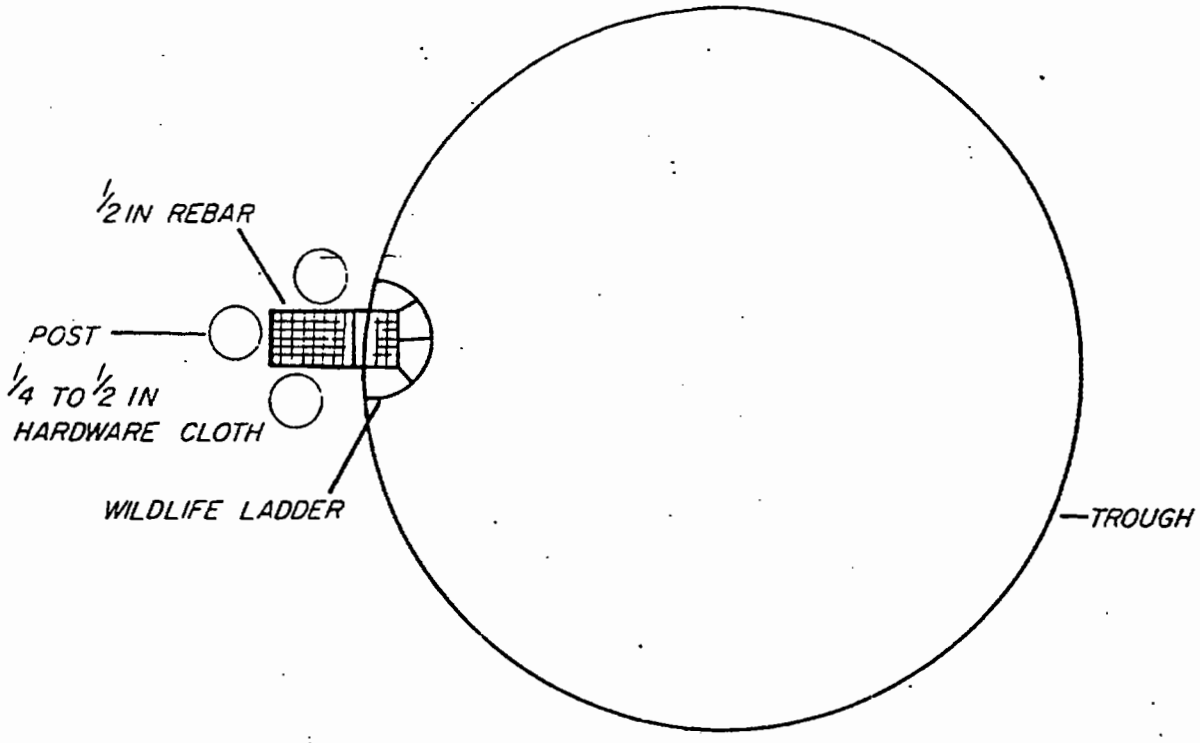

TOP VIEW

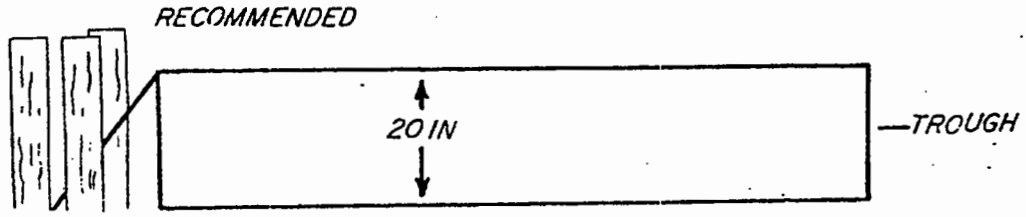

SIDE VIEW

ILLUSTRATION 4 Post around wildlife ladders leading into a livestock trough will reduce chances of damage to the ladder and injuries to large ungulates.

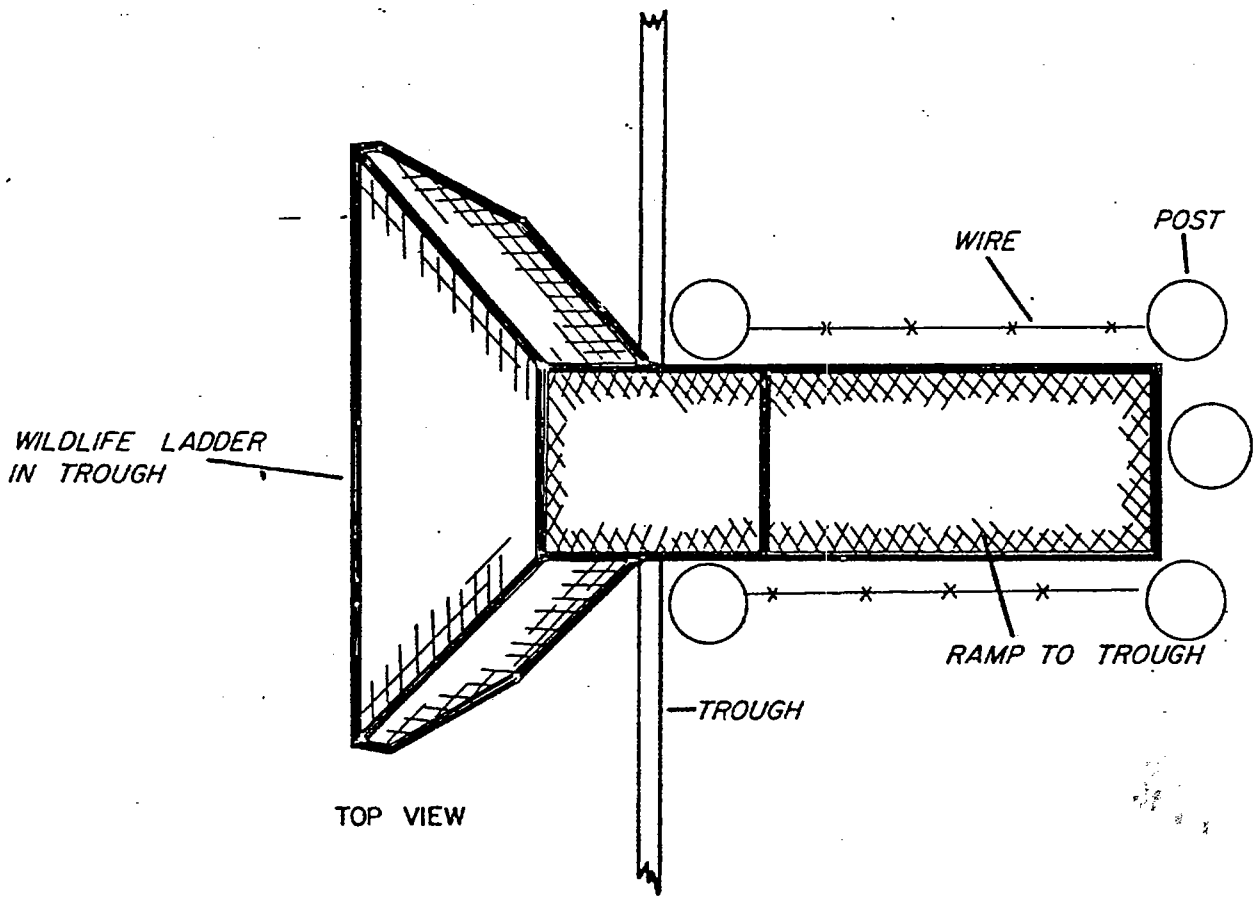

ILLUSTRATION 5 Fencing and post arrangement to protect wildlife ramp leading into a livestock watering facility.

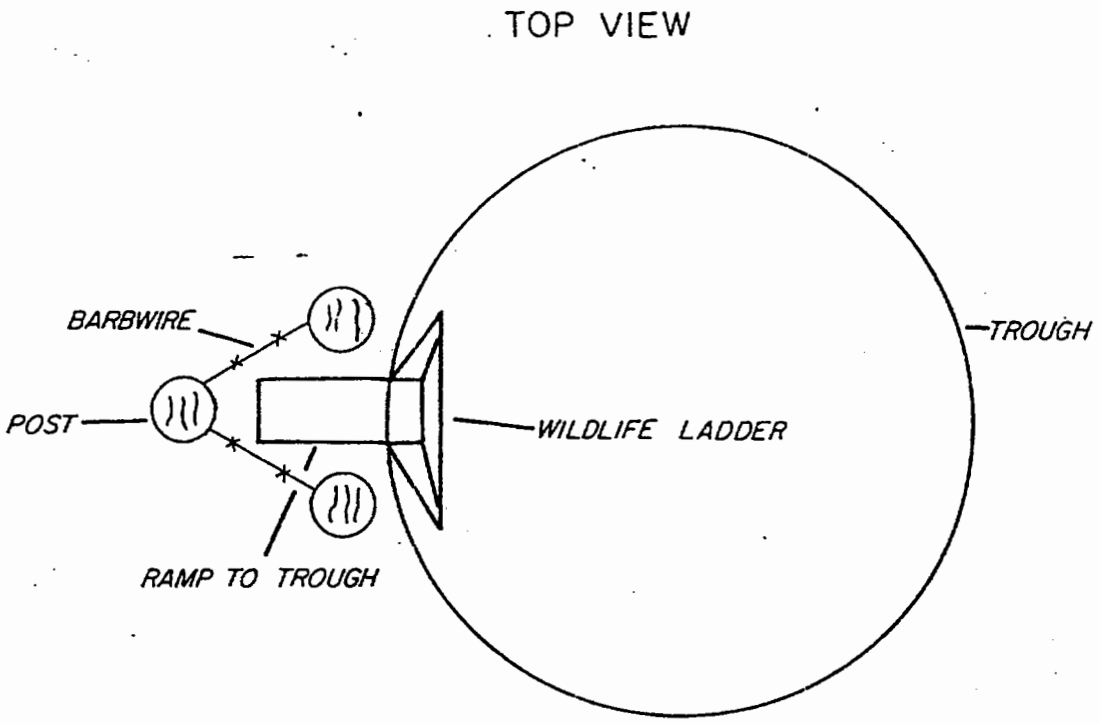

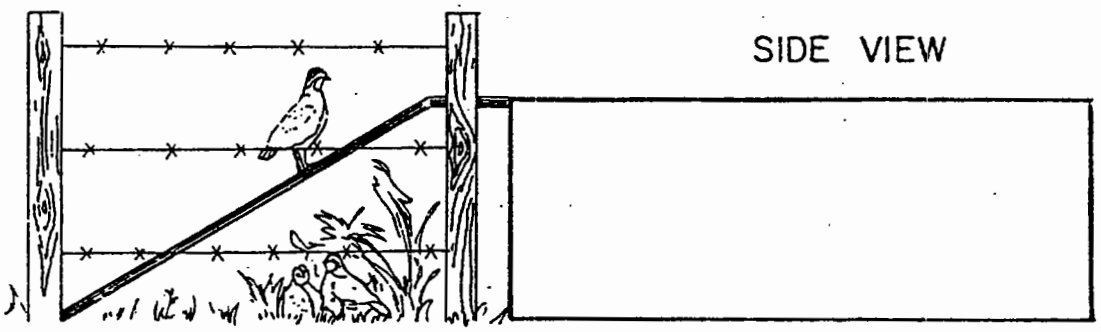

ILLUSTRATION 6. Protective fencing of wildlife ladders leading into livestock water facility will result in the establishment of protective cover for wildlife.

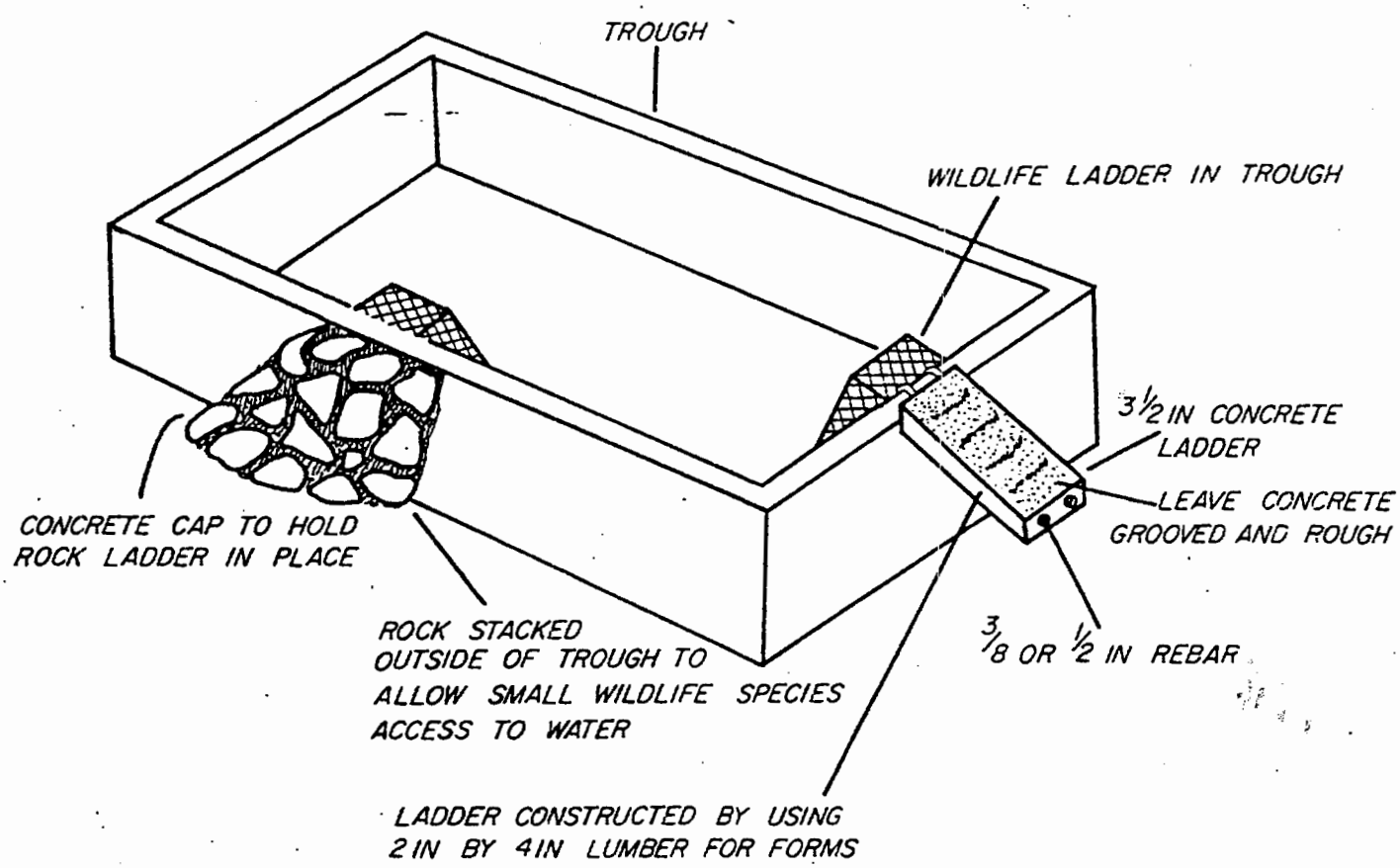

ILLUSTRATION 7 Concrete ramps or rock ramps capped by concrete into livestock trough can withstand trampling by large ungulates and protective fencing is optional.

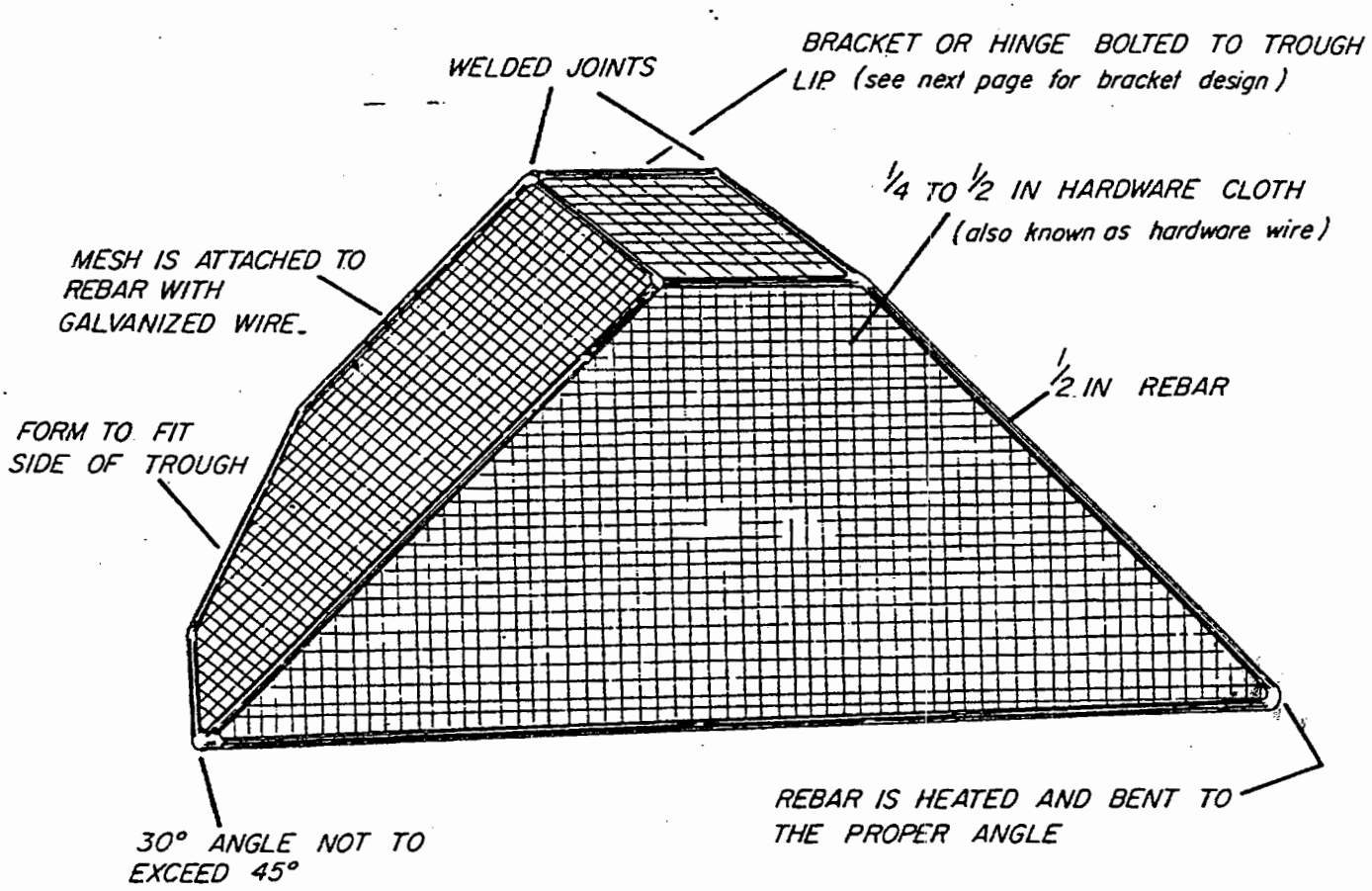

ILLUSTRATION 8 Triangular shaped wildlife ladder recommended rectangular and concave bottom trough.

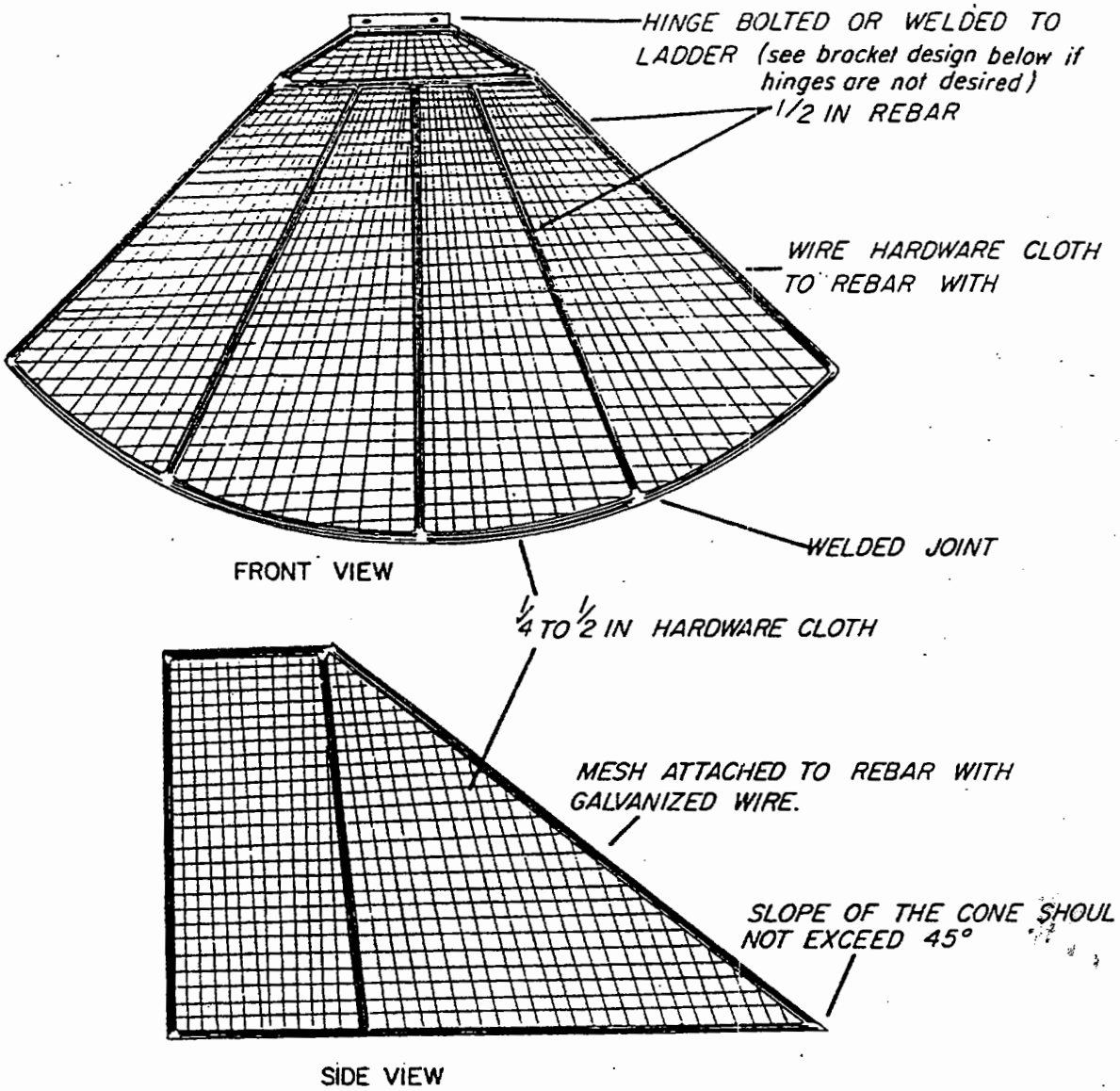

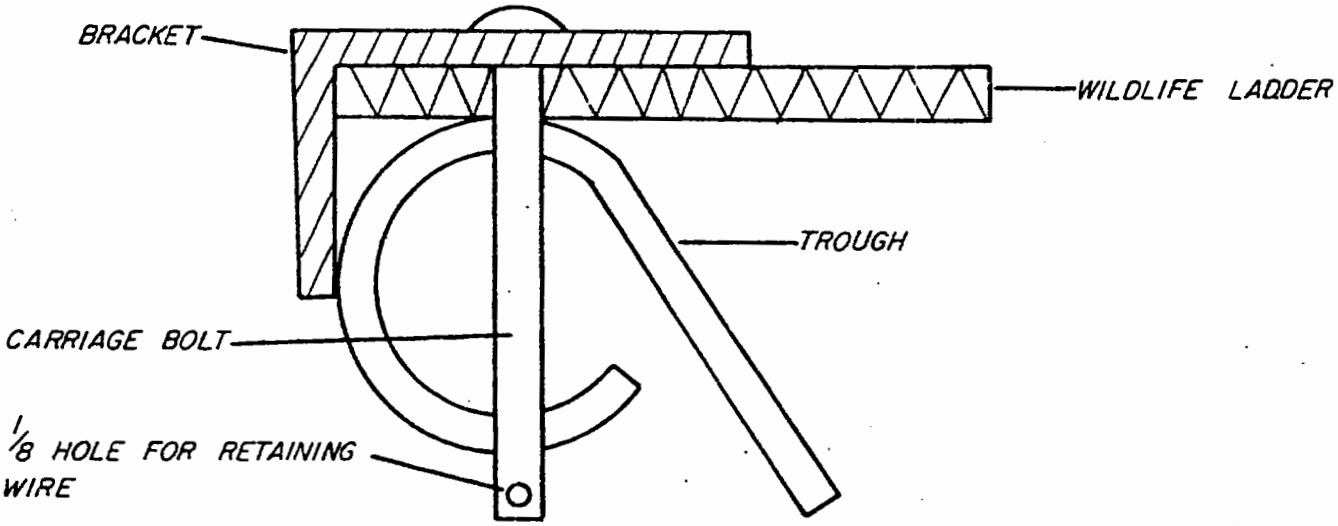

ILLUSTRATION 9 Cone shaped wildlife ladders are recommended for circular troughs.

TOP VIEW

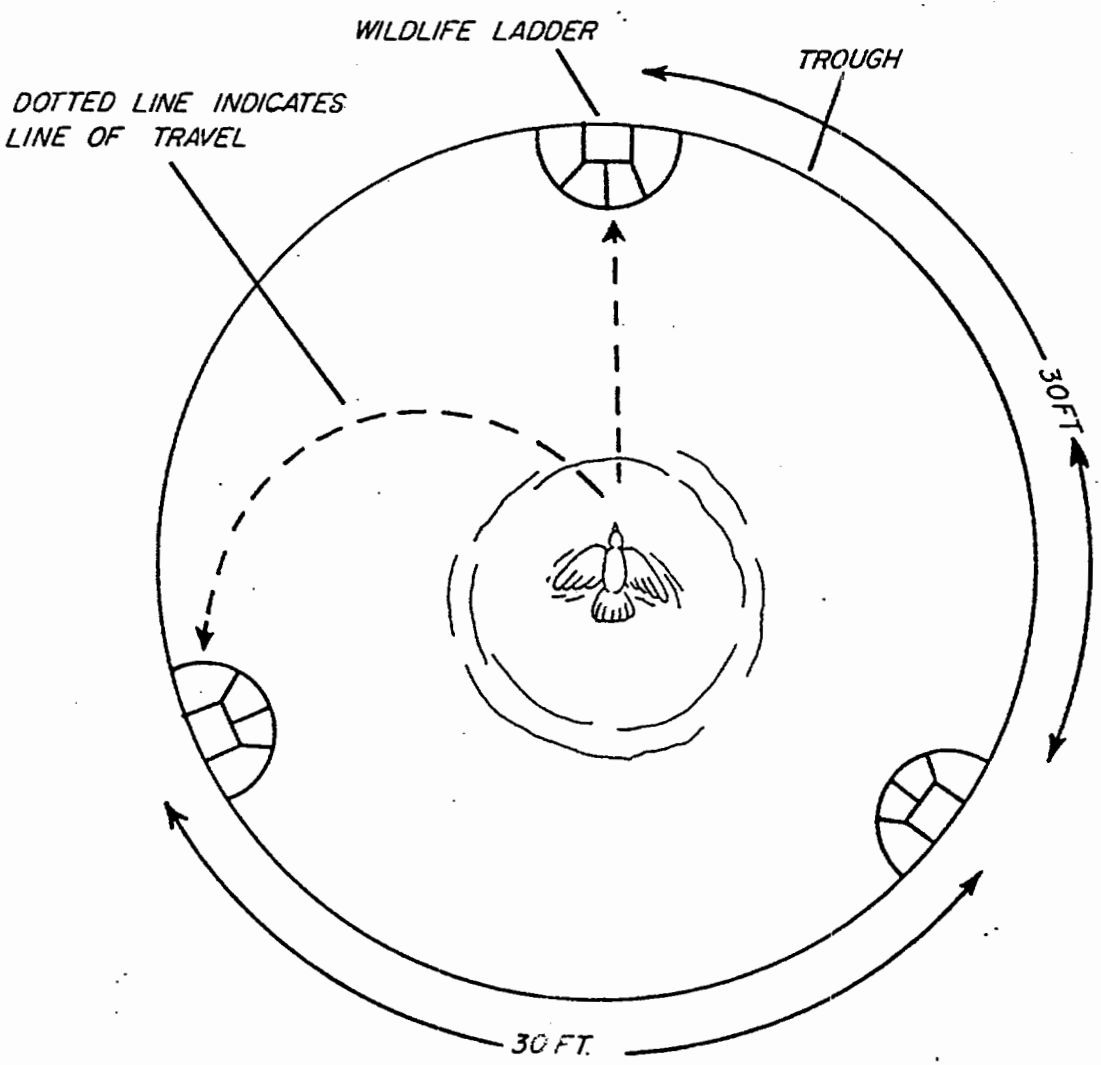

LADDER DESIGNED TO INTERCEPT
LINE OF TRAVEL

ILLUSTRATION 10 This drawing depicts probable swimming patterns from an animal falling into a circular trough, The wildlife ladders are properly installed. A minimum of one ladder per 30ft of trough perimeter is recommended.

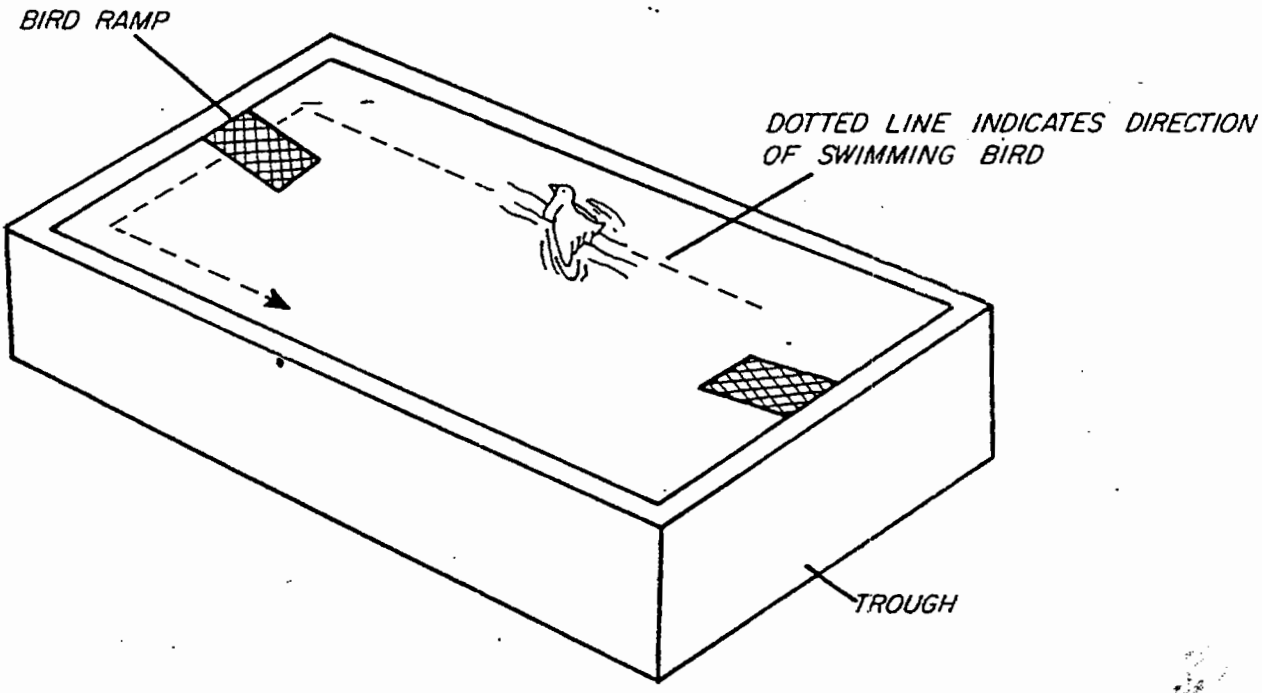

WILDLIFE LADDER, BIRD RAMP AT A 45° ANGLE TO TROUGH DOES NOT INTERCEPT LINE OF TRAVEL

ILLUSTRATION 11 Drawing depicts line of swimming pattern of an animal falling in a livestock watering trough and the probable problem with improperly designed wildlife ladder.

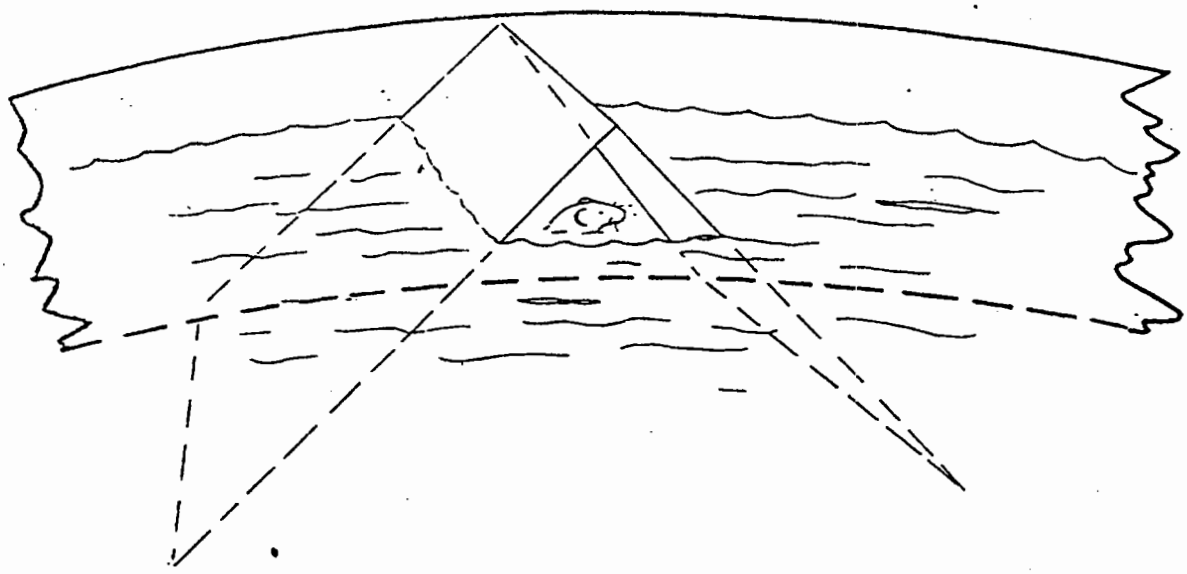

SIDE VIEWS

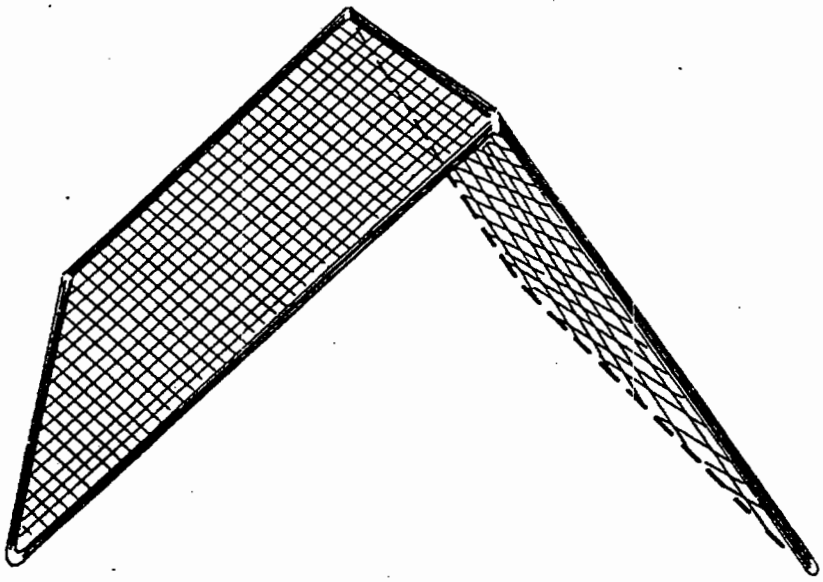

ILLUSTRATION 12 Improperly designed wildlife ladders can result in an animal becoming entrapped.

ILLUSTRATION 13 Float valve protective cover—wildlife ladder serves three purposes.

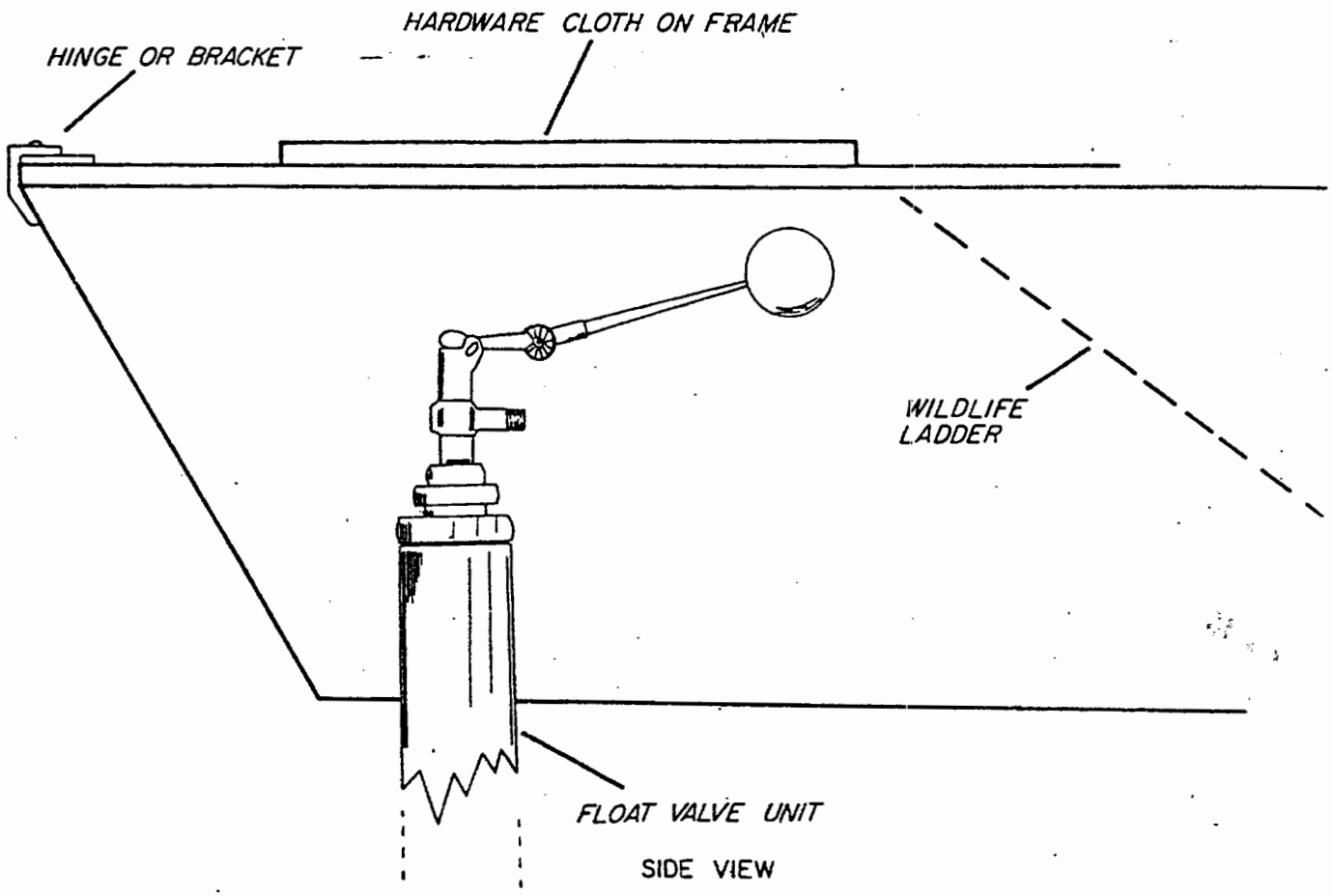

SIDE VIEW

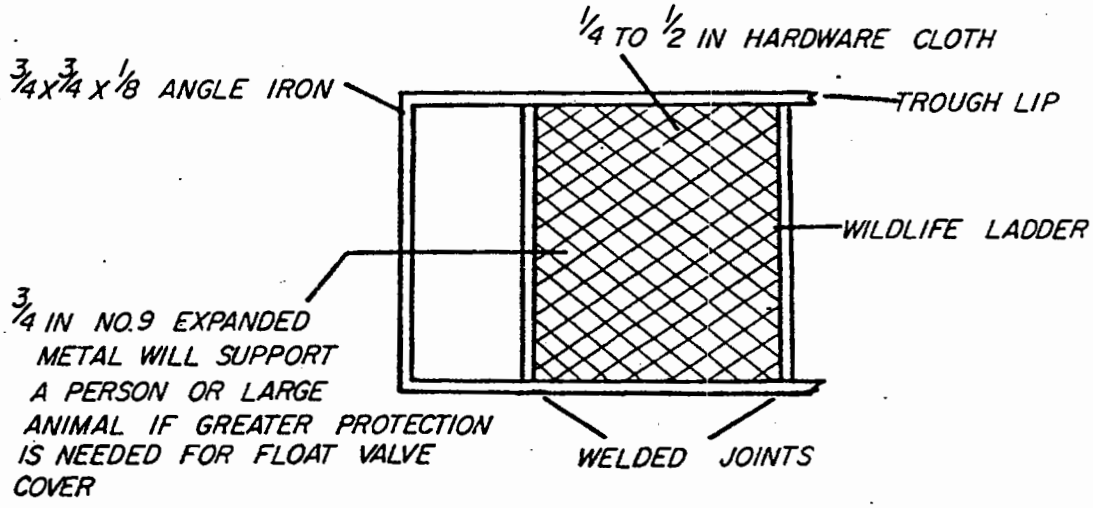

TOP VIEW

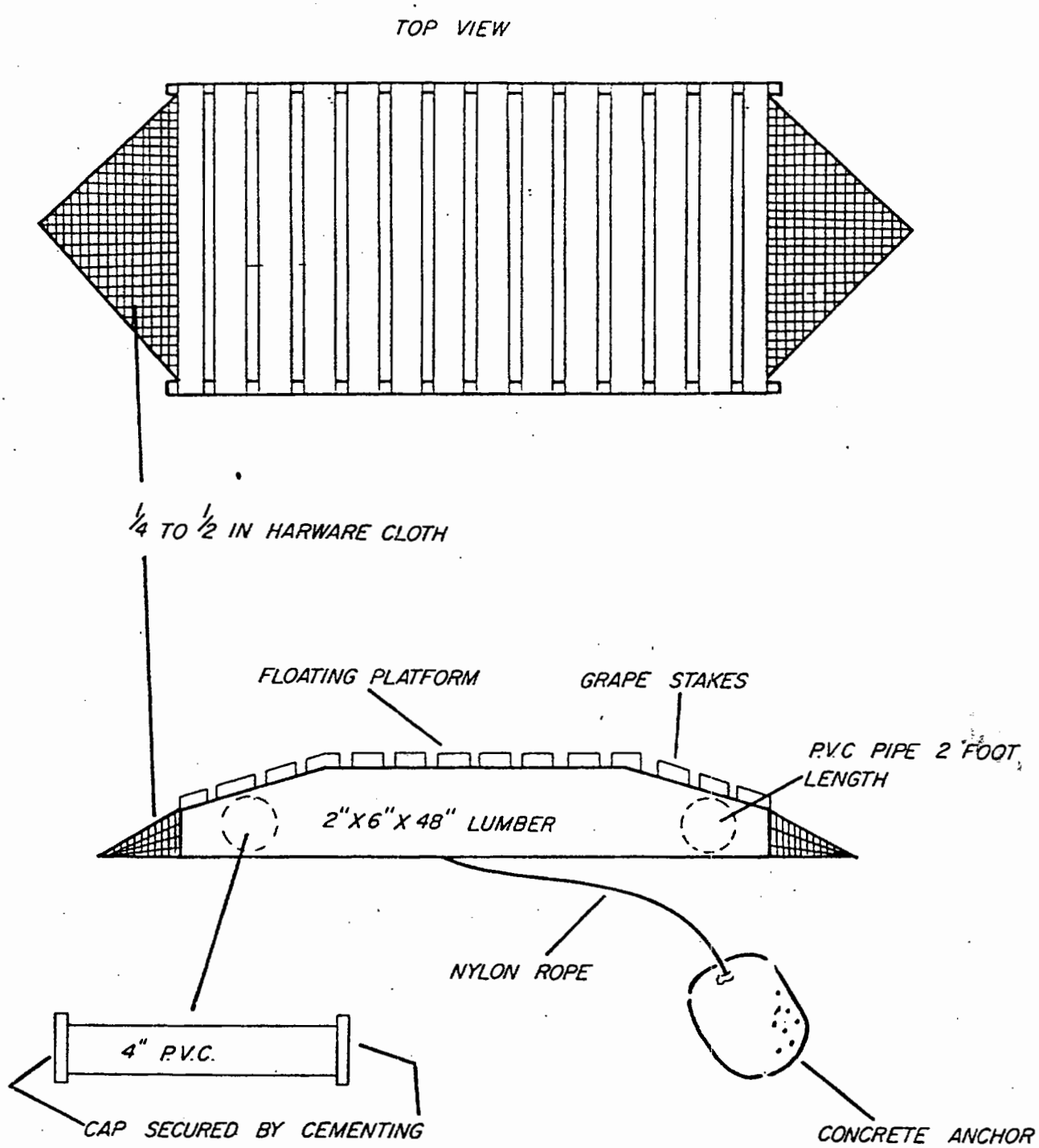

ILLUSTRATION 14 Floating wildlife platforms recomended for large open storage tanks.

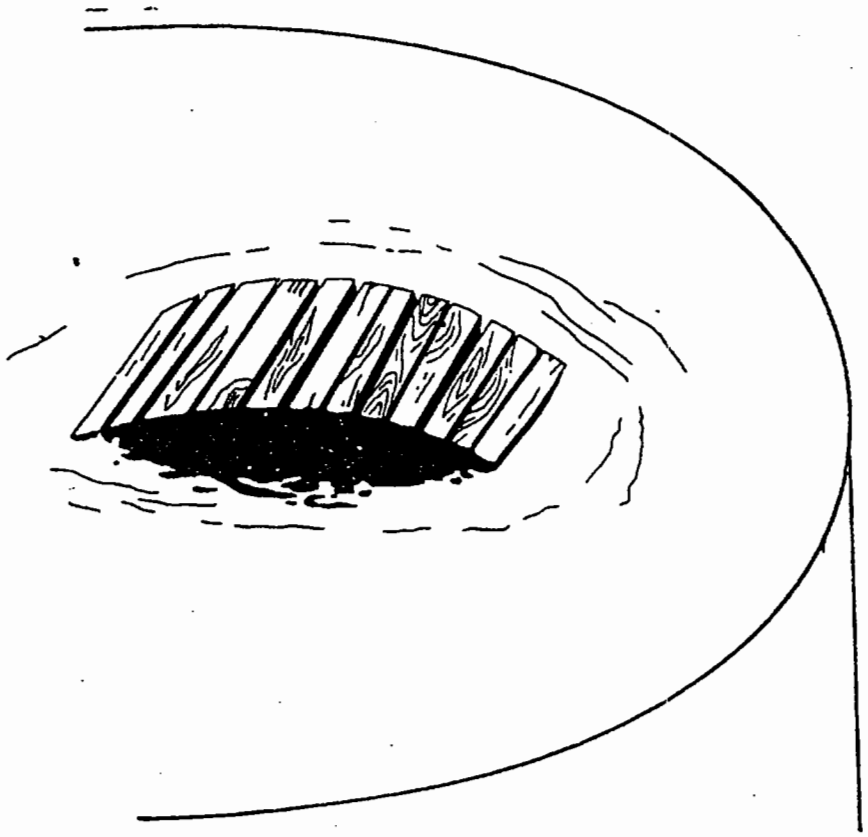

ILLUSTRATION 15 Floating wildlife platform in a large storage tank.

GPO 855-100