TECHNICAL NOTES

U.S. DEPARTMENT OF AGRICULTURE SOIL CONSERVATION SERVICE

February 25, 1983

TN. RANGE NO. 28

PLANS FOR CONSTRUCTING SMALL PORTABLE EXCLOSURES

Small areas fenced to exclude livestock and wildlife have been used for conducting ecological studies for many years. A most common use in rangeland management has been to protect a small area from grazing while demonstrating the effects of various treatments on forage production, or to obtain a measurement of total seasonal or annual production. They are quite effective in selling cooperators on various forage production and measurement techniques or practices they should be using. This technical note deals specifically with small cage type exclosures.

Experience has shown that slope sided cages have several advantages over vertical sided cages. Livestock are discouraged from rubbing by the sloping sides; sloping sides permit stacking several cages together in a compact group for hauling or storage; and sloping sides often add rigidity to the cage structure.

Following are plans for constructing various small, portable, exclosures.

Trapezoidal Portable Exclosure

Use 12 gauge, 2" x 4" welded steel wire of 4 foot height. The wire, cut to the dimension shown (See Figure 1), forms an exclosure with an approximate 5 foot square base, 2 foot top and 4 foot height.

With careful cutting, a 100 foot roll of wire will make 7 exclosures, minus the tops. Tops can be formed by crossing or diagonaling the 2 foot diameter apex from corner to corner with smooth galvanized wire, tying into the corners. This also adds rigidity to the exclosures.

This technical note was prepared by Robert J. Baum, State Range Conservationist, Soil Conservation Service, Boise, Idaho.

Construction is accomplished by cutting the wire and inverting even numbered sides as illustrated. The cut ends are twisted to tie the sides together. The ties are then turned down to give the structure smooth corners.

In use, the exclosures are staked over the area to be exclosed by using 8 railway spikes or similar steel or wooden pins (See Figure 2).

Cone-Shaped Portable Exclosure

Use 10 gauge, 2" x 2" welded wire mesh of 6 foot height. The wire, cut to the dimensions shown, forms an exclosure with an approximate 6 foot diameter base. Instruction for cutting and securing are as follows (See Figures 3 and 4):

1. Lay out a 12' diameter semi-circle on floor or flat area.
2. Lay welded wire over pattern and cut out semi-circle.
3. Bend at mid point to form point of cone and join sides together by tying with wire or hog rings.
4. Securely stake over area to be excluded with 4 stakes bent over in "U" shape at the top.

Square Portable Exclosure

Use standard gauge, 6" mesh wire of 47-48 inch height. The wire, cut to the proper dimensions forms an exclosure with an approximate 4 foot square base. Instructions for cutting and securing are as follows (See Figures 5 and 6):

1. Cut a 16 foot length of wire.
2. Cut the top four horizontal strands at 4 foot intervals. These cut sections form the top cover of the cage.
3. Bend the wire to form 90° angles at the same 4 foot intervals as cuts were made, forming a square 4' x 4'.
4. Tie the 6 bottom horizontal wires together to complete the cage.
5. Bend the top cut sections down at 90° angles toward center of square forming a top. Tie securely with wire.
6. Securely stake over are to be exclosed with 4-8 stakes.

TRAPEZOIDAL PORTABLE EXCLOSURE

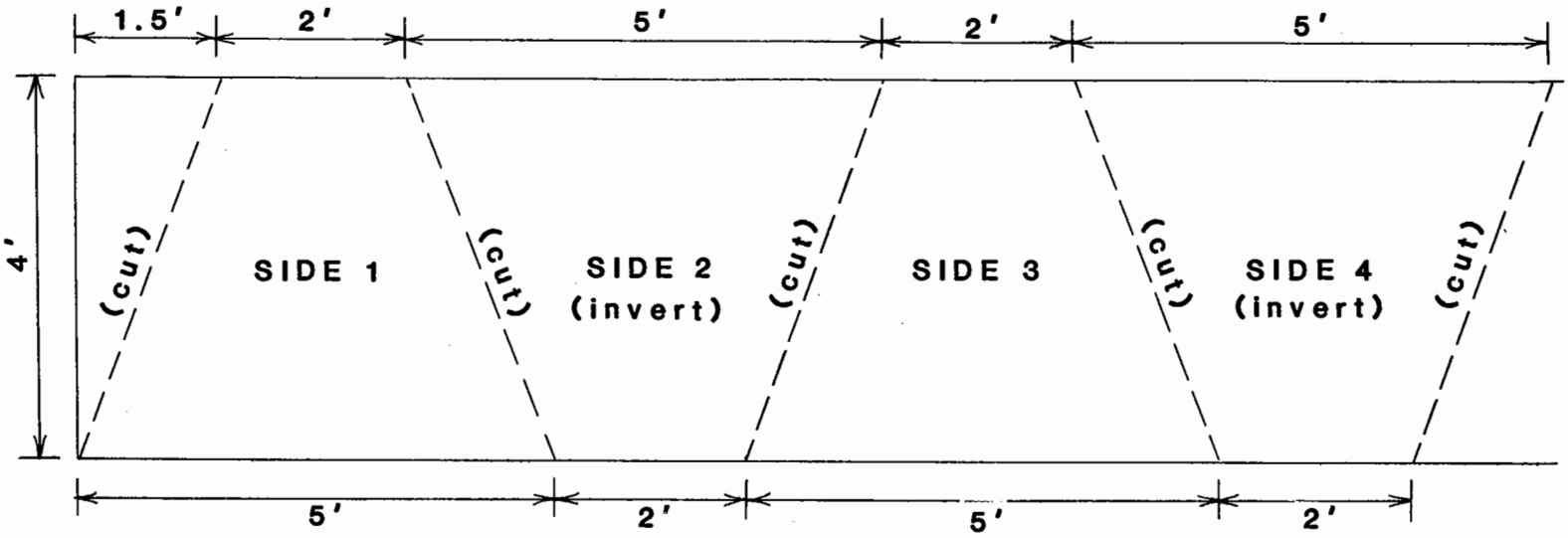

Figure 1

CUTTING PLANS

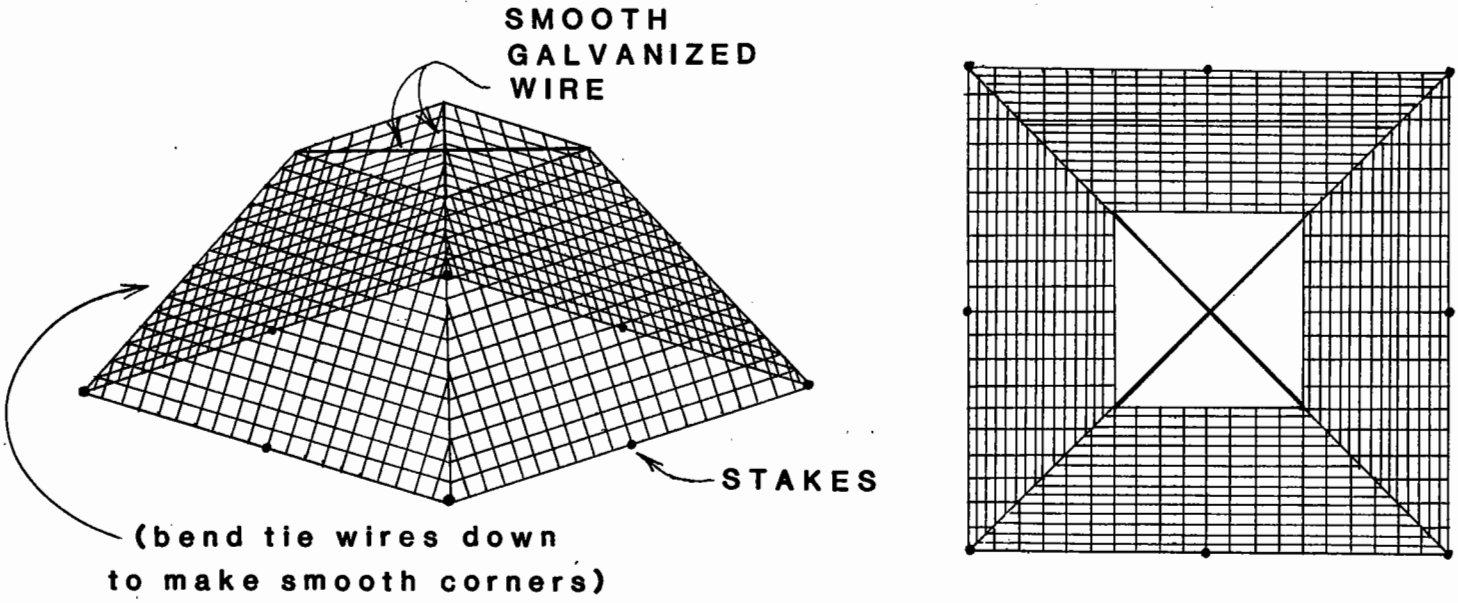

Figure 2

SIDE AND TOP VIEW

CONICAL PORTABLE EXCLOSURE

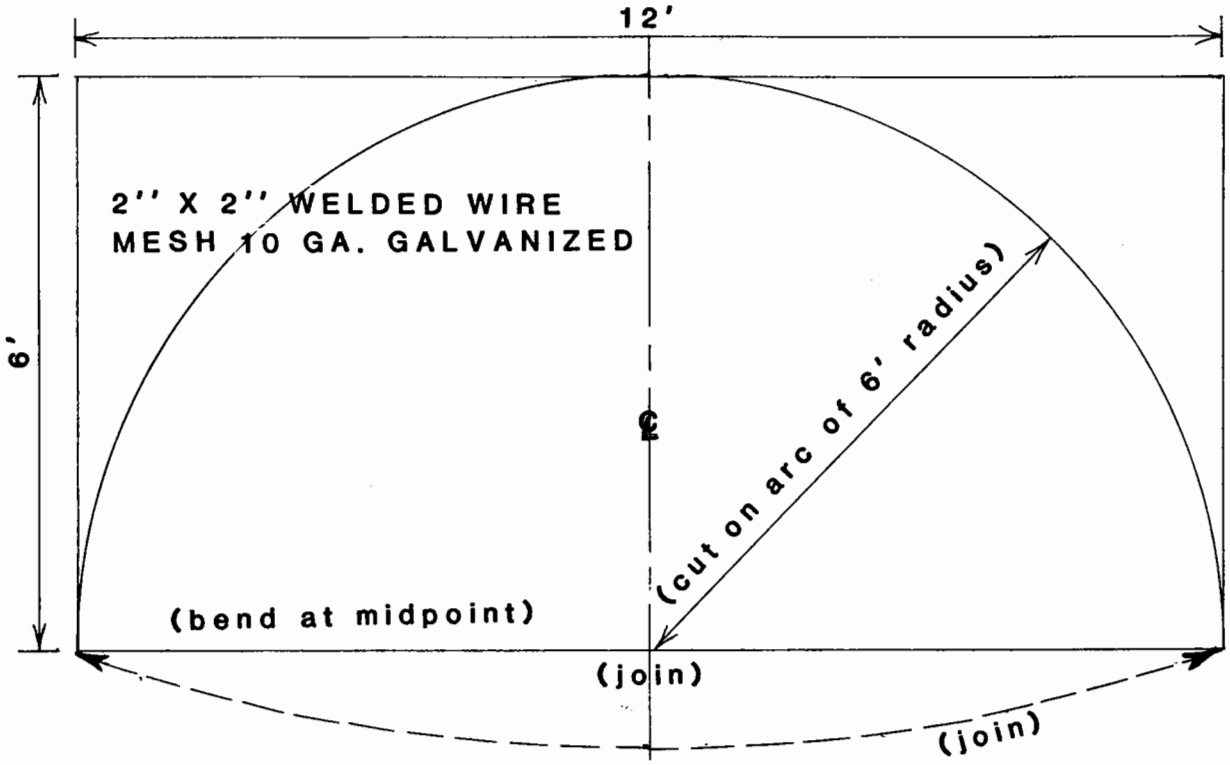

Figure 3
CUTTING PLANS

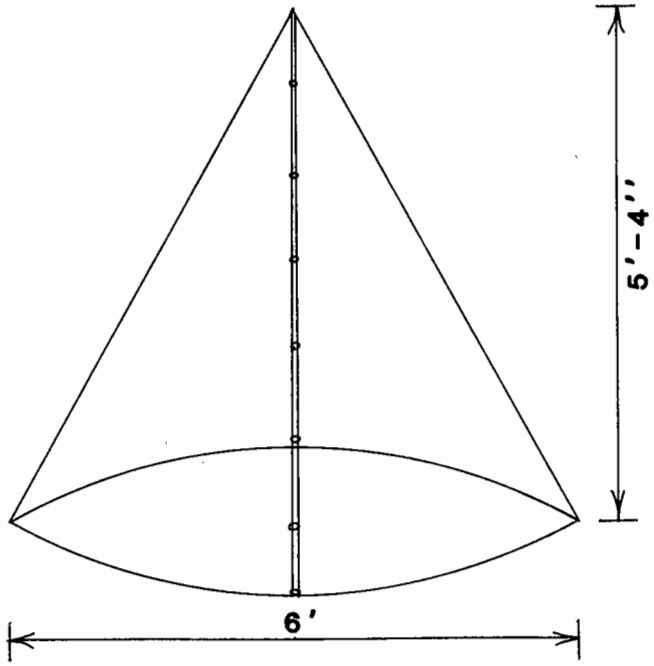

Figure 4
SIDE VIEW

SQUARE PORTABLE EXCLOSURE

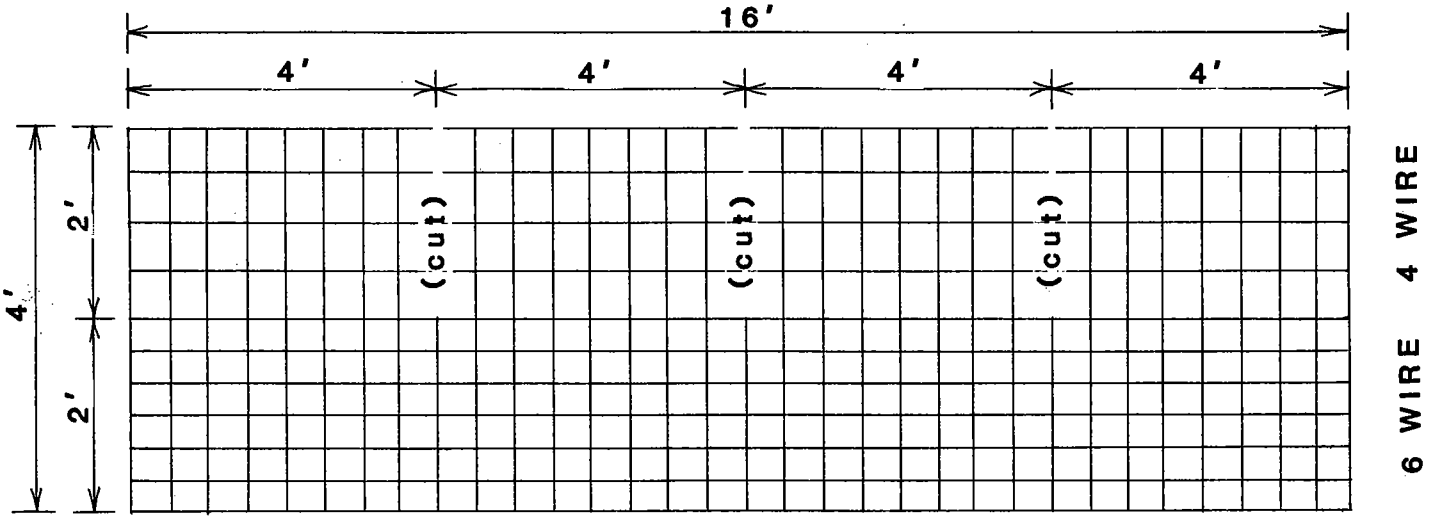

Figure 5
CUTTING PLANS

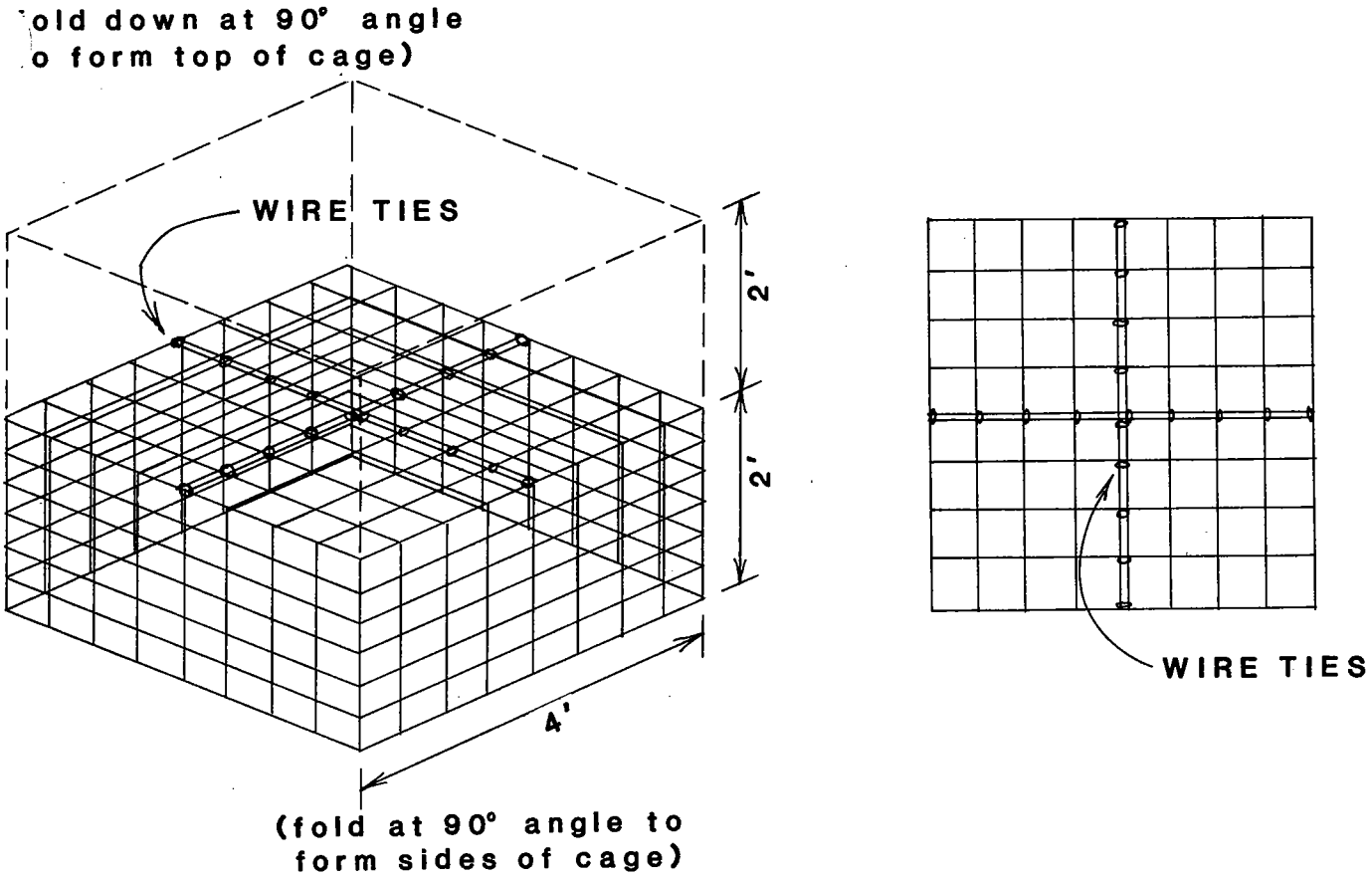

Figure 6
SIDE AND TOP VIEW