NEBRASKA TECHNICAL NOTE

U.S. Department of Agriculture
Natural Resources Conservation Service

December 2, 2010

Range and Pasture Technical Note #22
Joseph May, State Rangeland Management Specialist

RANGELAND AND PASTURELAND QUANTITATIVE INVENTORY METHODS

General

This informational technical note provides guidance for conducting rangeland and pastureland quantitative inventory methods. Background information on this subject can be found in Section 600.0401, Chapter 4 of the National Range and Pasture Handbook (NRPH). NRCS uses **three methods in inventorying rangelands and pasturelands** (NRPH, Ch. 4, pp. 4-7). These are:

- **Estimating by Weight Units,**
- **Double-Sampling, and**
- **Harvesting Inventory Method**

When preparing to use one of these methods to inventory a given unit of rangeland, the conservationist should first note the different rangeland ecological sites and separately delineate those on the conservation plan map or rangeland inventory map.

Much like soil series that are mapped, rangeland ecological sites can be delineated as consociations, associations, and complexes. Consociation delineation consists of one rangeland ecological site. An **association** is generally two rangeland ecological sites within the same polygon. These two distinct ecological sites could have been separately delineated, but due to similar management they are delineated together. A **complex** is a polygon that has two or more distinct rangeland ecological sites that are delineated together due to the difficulty in making separate delineations. In most instances rangeland ecological site consociations or rangeland ecological site complexes are used.

Not addressed in this Technical Note are grazed forests and woodlands that may be separately delineated from rangeland ecological sites by their distinctive forestland ecological sites or forest association types.

Rangeland inventory methods provide information such as: plant species composition; rangeland ecological condition and apparent trend or percent similarity index; annual herbage; amounts of usable forage present; and forage value present as used by a given kind or class of livestock or wildlife.

The conservationist should visually review the rangeland ecological site delineations to determine whether rangeland ecological condition or forage conditions will change with the map polygons. Should this occur, separate transects may be needed to determine differences in rangeland ecological condition or forage conditions around livestock water developments, springs, or natural perennial streams and other water bodies.

Generally a range transect is conducted using a quadrat (Figs. 1-9). Many conservationists prefer to transect along an out-stretched 100-feet long nylon measuring tape. A transect could be longer than 100 feet if the rangeland ecological site polygon is longer or wider than 100 feet, and if the conservationist is capturing a much larger overview of the rangeland ecological site polygon. A range transect usually consists of the combined repetition of ten plots. Common quadrat shapes and sizes are described in Figures 1-9.

Figure 1 – Circular 9.6 ft^2 Quadrat
Diameter = 42 inches
Note circumference = 10 ft-11.8 in
Commonly referred to as SCS range hoop
Recommended size for quantitative inventory on the Shortgrass Steppe

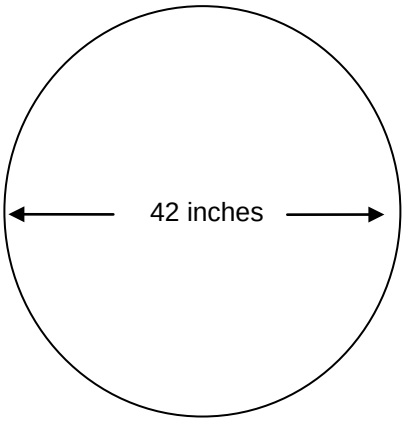

Figure 2 – Square 9.6 ft^2 Quadrat
Square shape is 37.2" x 37.2" (3.1 ft x 3.1 ft)
Lends itself to being used in "nested" plots in rangeland areas with many medium or large shrubs (see Fig. 8).

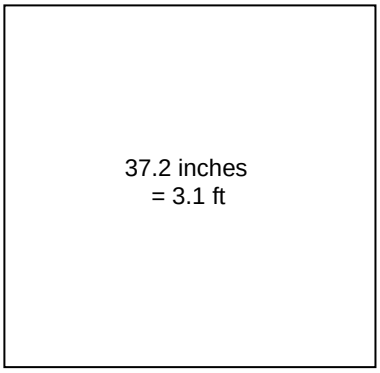

Figure 3 – Rectangular 9.6 ft^2 Quadrat
Rectangular shape is 2 ft wide x 4.8 ft long (24" wide x 56.6" long)
Used principally in research projects

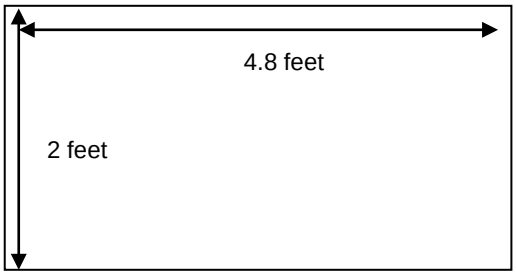

Figure 4 – Rectangular 1.92 ft^2 Quadrat
Smallest size quadrat used by NRCS
11.5" wide x 24" long (0.96 ft x 2 ft)
Used for inventorying tallgrass prairie, irrigated and improved pasturelands, and the understory of riparian areas

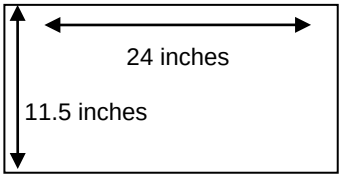

Figure 5 - Square 2.40 ft^2 Quadrat
19.2" x 19.2" (1.6 ft x 1.6 ft)
Used for inventorying tallgrass prairie, Irrigated and improved pasturelands, and the understory of riparian areas

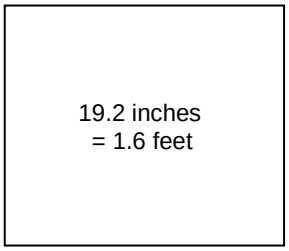

Figure 6 - Square 4.80 $ft.^2$ Quadrat
26.4" x 26.4" (2.2 ft x 2.2 ft)
Used for inventorying mid-grass prairie

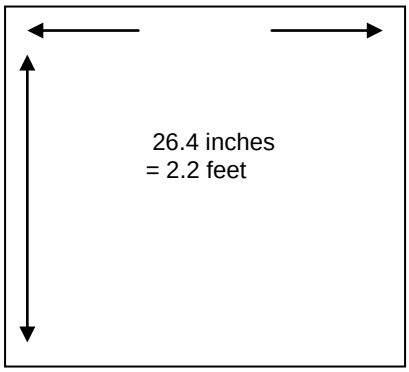

Figure 7 – Circular 4.80 $ft.^2$ Quadrat
Diameter = 29.475 "(2 ft-5.7")
Circumference = 7 ft-9.2"
May be used instead of shape in Fig. 6

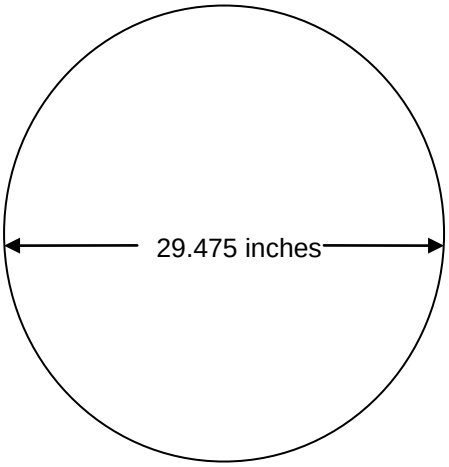

Note: Diagrams not to scale; examples only.

Figure 8 – Square 9.6 ft.^{2} Quadrat Nested in a Square 0.01 Acre Extended Plot

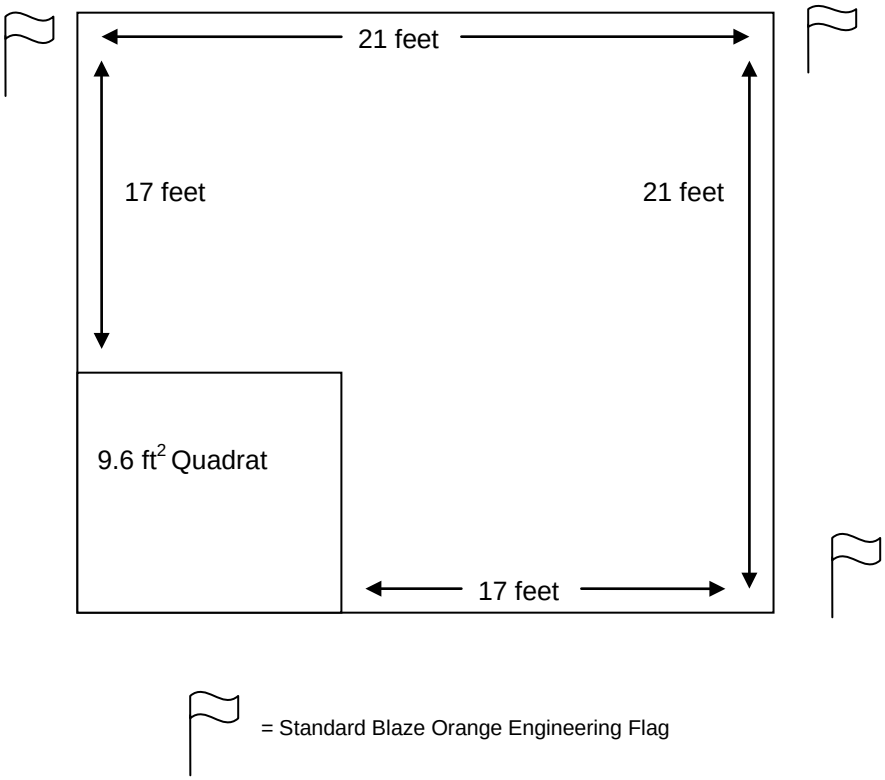

Figure 9. Diameter of a Circular 0.01-Acre Extended Plot

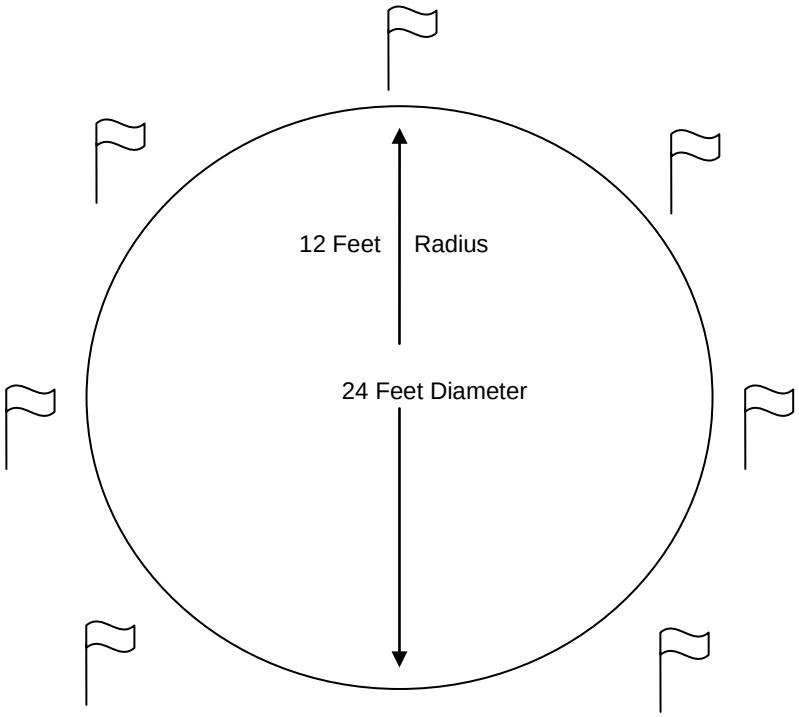

The 0.01 acre extended plot can be constructed by pacing off the distance from the outer corners of the 9.6 ft^2 quadrat or measuring off the distance with a 100-feet nylon tape (Fig. 8). The corners of the 0.01 acre extended plot can be marked off with standard blaze orange engineering flags, white engineering tape or colored plastic flagging tape.

Estimating by Weight Units Inventory Method

Begin by identifying all the major plants on the rangeland ecological site polygon. Then use the natural spread and diameter of your hand to overshadow a given plant and clip the current year's growth of the plant. These will be your "handfuls" recorded on the inventory worksheet. Only one weight unit or "handful" is necessary for each herbaceous plant species. These "handfuls", weighed out in grams, will be the weight units for the inventory.

Next, estimate how many "weight units" of each plant species occur in each plot then multiply the sum of the "weight units" of each plant species by the earlier determined number of grams that each "weight unit" represents. The product is the estimated amount of grams, in green weight, of a particular plant species that is presently occurring in the plot. Repeat this method on all ten plots in the transect.

To convert from grams to pounds per acre of total production, total all the grams of green weight of all plants and multiply by the appropriate quadrat conversion factor (Table 1).

Table 1. Plot-size Conversion Factor from Grams to Pounds per Acre

To convert grams to pounds per acre use the following conversion factors associated with each plot size. These conversion factors can be used for converting "green" weights (field weights) or air-dry or oven-dry weights.

Plot Size	Conversion Factor Per Plot	Conversion Factor Per 10 Plots
1.92 ft^2	multiply grams by 50	multiply gram by 5
2.40 ft^2	multiply grams by 40	multiply grams by 4
4.80 ft^2	multiply grams by 20	multiply grams by 2
9.60 ft^2	multiply grams by 10	multiply grams by 1
96.0 ft^2	multiply grams by 1	multiply grams by 0.1

The following is an example of how to convert from green weight to air-dry or oven-dry weight. Assume that the original "weight unit" sample of sideoats grama, in an inventory, was 9 grams in green weight. The paper bag sampled was then air-dried. After air-drying the paper bag sample of sideoats grama now weighed 4 grams. Divide the 4 grams air-dry weight, by the 9 grams green weight to obtain the ratio of air-dry to green weight, in this case 4 grams dry weight divided by 9 grams green weight = 44%. To convert green weight pounds per acre to dry weight pounds per acre, multiply green weight by the percent previously calculated, i.e., 1000 pounds green weight per acre times 44 percent equals 440 pounds dry weight per acre.

This process can then be conducted for the total pounds per acre green weight of all plants that were inventoried in the transect. The total of air-dry weight pounds per acre of all plants in the transect is the total production for that rangeland ecological site. This figure can be used to determine a suggested, initial stocking rate which will be discussed later in this technical note.

Double-Sampling Inventory Method

At the beginning of the transect determine "weight units" for each major plant present on the rangeland ecological site polygon, using the "estimating by weight units" inventory method. Then conduct a transect as previously described with "estimating with weight units" inventory method. After estimating evaluation of ten plots, return for clipping by plant species to two randomly selected plots that have been flagged with engineering flags (2 of the 10 sampled). These clipped weights will provide a correction factor to

underestimation or overestimation of the weights of the plants present. The clipped weight information also improves the validity of overall transect information. Then develop the correction by dividing the clipped weight of a given plant in grams by the estimated weight of the same plant in grams. This calculation is computed for each plant species clipped within the plot.

The correction factor ratio equals: plant species clipped weight (grams) divided by plant species estimated weight (grams).

A **correction factor greater than 1** means **underestimation** of the weight of a given plant species in the plot that was clipped. Likewise, a **correction factor less than 1** means **overestimation** of the weight of the given plant species in the plot that was clipped.

To illustrate how the correction factor is calculated: assume the conservationist had clipped 50 grams of sideoats grama in a given plot and had previously estimated (by weight units) 35 grams of sideoats grama.

$$\frac{\textbf{50 grams clipped weight – sideoats grama}}{\textbf{35 grams estimate weight – sideoats grama}} = 1.43$$

Total pounds per acre of a given plant species x correction factor = corrected total pounds per acre.
For example, assume 440 lbs/ac air-dry weight of sideoats grama for a given rangeland ecological site delineation.

440 lbs/ac sideoats grama x 1.43 decimal correction factor = 629 lbs/ac sideoats grama

The above example illustrates an underestimation of the weight of sideoats grama in the inventory (i.e., the correction factor was greater than one). Thus the correction factor increased the pounds per acre of sideoats grama to 629 lbs/ac to correct for the underestimation.

What if the correction factor had been less than one, i.e., a correction factor of 0.43?

440 lbs/ac (sideoats grama) x 0.43 correction ratio = 189 pounds per acre (sideoats grama)

The overestimated the weight of sideoats grama in the inventory would be decreased using the correction factor of less than one to correct for the overestimation.

The double sampling method of inventory data is particularly useful when revising or updating rangeland ecological site descriptions.

Harvesting Inventory Method

The harvesting inventory method involves clipping all the plants, by species, from each of the ten plots that comprise the transect. This method can be very time consuming. This method is very good for collecting information where rangeland ecological site descriptions need to be prepared or revised.

Pastureland Inventories

Goals of pastureland inventory should be to determine forage plant species percent composition, pounds of air-dry forage per acre, and a forage value rating if appropriate.

Dryland Pasture Inventory

Use either the “double-sampling” or “estimating by weight units” inventory techniques for dryland pasture inventories being managed like rangelands.

Depending on the amount of grazing pressure on a given unit of dryland pasture, the plant species composition could shift ecologically with some plants being “increasers” and others “invaders”. Note any ecological shifts in the dryland pasture inventory from the stable plant community originally seeded with improved forage plants. These changes in plant inventory will provide important information to the range conservationist, stock operator and/or landowner.

Irrigated Pastureland Inventory

Irrigated pastureland is managed like other kinds of cropland or farmland. There is usually an application of fertilizer and other soil amendments, and at times herbicides. Due to these management inputs the amount of forage production will vary from farm to farm or ranch to ranch.

Use either the “double-sampling” or “harvest inventory” methods to inventory irrigated pastureland. Inventories may be necessary on an annual basis, depending on the availability of irrigation water or whether or not fertilizer applications or other soil amendments have been applied. Again, depending on the amount of grazing pressure applied to a unit of irrigated pasture there may be ecological shifts in the plant community. Since these kinds of grazing lands have been historically viewed as agronomic management units the forage value rating may be considered relevant and appropriate rather than a traditional rangeland ecological condition rating.

The forage value rating system is a utilitarian, rather than ecological rating. It is a good method for evaluating both dryland and irrigated pasturelands. This rating reflects the forage value for a given kind or class of livestock. A forage suitability group description should already have the information on forage preference for individual forage plant species relative to cattle, sheep, horses, etc.

Rangeland Shrub Inventory

To conduct rangeland inventories on shrub rangelands, set up a 0.01-acre extended plot to account for medium and large shrubs. In Nebraska, this would include such shrubs as rubber rabbitbrush and sand sagebrush. Only current year’s growth is inventoried. The 0.01-acre extended plot is inventoried by “estimating by weight units.” Clip current year’s growth from a given shrub. Note: it is not necessary to clip an entire individual shrub; one-half of a shrub provides a representative weight unit. The weight unit should be recorded in grams. Inventory all the shrubs species present in the extended plot by weight units and record the total estimated weight of current year’s growth for each shrub species in grams. Convert the total grams of the shrub species present in the extended plot to pounds per acre green weight. Generally, two woody plot or extended plot inventories are conducted in the transect. An average of the two inventoried plots is taken when determining pounds per acre.

For example, 20,000 grams (green weight) of sand sagebrush were inventoried on a 0.01-acre plot. One pound (lb) equals 453.6 grams per pound (gm/lb). Thus: total grams (gm) on the 0.01 ac plot divided by 453.6 gm/lb = lbs/0.01 ac. Or 20,000 gm / 453.6 gm/lb = 44.09 lbs in the 0.01 ac plot. To convert pounds per 0.01 acre to pounds per acre multiply by 100; i.e. 44.09 pounds/0.01acre x 100 = 4,409 pounds per acre. Thus, in this example there are 4,409 pounds per acre of current year’s growth of sand sagebrush for a given rangeland ecological site delineation.

The calculated pounds per acre of green weight of current year’s growth of a particular shrub species then needs to be converted to pounds per acre air-dry or oven-dry weight as previously discussed under the section on “Estimating by Weight Units Inventory Method.” Then sum the total of the air-dry pounds per acre of current year’s growth of all shrubs, from the 0.01-acre extended plot, along with the air-dry pounds per acre of current year’s growth of herbaceous plants from the smaller 9.6 $ft.^2$ quadrat ten-plot transect, to obtain total air-dry pounds per acre for the inventoried rangeland ecological site.

Rangeland and Pastureland Rating Systems

Two historic types of rangeland and pastureland rating systems used by NRCS are: Rangeland Ecological Condition and Apparent Trend now referred to as Percent Similarity Index, and the Forage Value Rating. Recently, Rangeland Health and Pasture Condition Scoring has been adopted by the agency. Rangeland ecological condition and apparent trend are used only on historic climax rangelands. The forage value rating system has historically been used to rate the understory of grazed forests and woodlands in NRCS. Rangeland Health and Pasture Condition Scoring will not be discussed here, as this evaluation system does not require quantitative field inventory methods. Range Ecological Condition, Percent Similarity Index, and Forage Value Rating all require quantitative field inventory methods in order to determine the value of these ratings.

Rangeland Ecological Condition

Rangeland Ecological Condition is an ecological, not utilitarian rating, although many rangeland management specialists and range managers have extrapolated utilitarian interpretations from a given Rangeland Ecological Condition class, such as forage value of individual plant species relative to a kind or class of livestock, and/or adjusted stocking rates. This was not a proper use of these rating systems. A detailed discussion on current Trend ratings for rangeland can be found in Chapter 4, pages 4-14 through 4-16, of the National Range and Pasture Handbook. Rangeland Ecological Condition descriptive adjectives were replaced in NRCS with Ecological Class numbers (Roman numerals), and with Ecological Condition as used by the USDI, Bureau of Land Management (BLM) (Table 2).

1/Table 2

Historic Climax Rangeland Ecological Ratings Using Percent Similarity Index

Percent Similarity Index	Range Condition Class	Ecological Class	BLM Ecological Condition
76% - 100%	Excellent/Potential	I	Potential Natural Community
51% - 75%	Good	II	Late Seral
26% - 50%	Fair	III	Mid Seral
0 - 25%	Poor	IV	Early Seral

1/ From: Rangeland Ecology and Management. 1994. Heady and Child & Ecological Site Inventory. 2001. E.F. Habich

Percent Similarity Index

Percent Similarity Index is the measure of distance of the current rangeland plant community from the historic climax plant community. Percent Similarity Index may also be applied toward the distance of a current rangeland plant community in relation to Desired Plant Community. The purpose of Percent Similarity Index is to provide the conservationist and the landowner with a point in the trajectory of the plant community, either in succession or retrogression, to a desired plant community state and improve the ability to make grazing and other management decisions.

Percent Similarity Index uses the same percent numbers to rate native rangelands as those used in the Rangeland Ecological Condition rating system. These numbers are the present percent amounts of plants, by weight, of the historic climax plant community that is currently present on a given rangeland ecological site. Note: what used to be termed range site is now being called rangeland ecological site. An ecological site may have the potential to be woodland or have a separate or distinct steady state or climax, depending on whether natural fire is present in regular cycles or suppressed. For example, in Nebraska the invasion of smooth brome has occurred on native tallgrass prairie due to fire suppression, as well as past heavy livestock grazing on native, warm-season grasses in early summer. Another example is the encroachment of eastern red cedar on native tallgrass and mid-grass prairie rangelands, also due to suppression of fire.

Forage Value Rating

The Forage Value Rating system has four forage value rating classes, based on forage preference and desirability of the various plants present by a given kind or class of livestock intended for grazing on the management unit. These include: Very High, High, Moderate, and Low (Table 3).

2/Table 3

Determining the Forage Value Rating

Forage Value Rating	Minimum Percentage
Very High	50% Preferred + % Desirable = 90% (Upward to100%)
High	30% - 49% Preferred + % Desirable = 60% (Upward to 89%)
Moderate	10% - 29% Preferred + % Desirable = 30% (Upward to 59%)
Low	Less than 10% Preferred

2/ From: Page 5.1-20, Chapter 5, National Range and Pasture Handbook. Note: The Forage Value Rating system is a utilitarian rating.

Forage plants should be separated into three general categories: “Preferred Plants”, “Desirable Plants”, and “Undesirable Plants”. Individual plants may be placed in different categories based on the preference of a given kind or class of livestock. “Undesirable Plants” can be further subdivided into “Undesirable Plants”, “Non-consumed Plants”, and “Toxic Plants”.

An example of how to calculate the Forage Value Rating follows. Assume a pastureland inventory revealed that there were 1,000 pounds per acre of orchardgrass, 500 pounds per acre of smooth brome, 300 pounds per acre of assorted weeds; a total of 1,800 pounds per acre of herbage. The orchardgrass made up 55 percent by weight of the total herbage production (1,000 lbs/1,800 lbs = 0.55). Smooth brome made up 28 percent by weight of total herbage production (500 lbs/1,800 lbs. = 0.28). The assorted weeds made up 17 percent of total herbage yield (300 lbs/1,800 lbs = 0.17). All the herbage yields had previously been converted to air-dry weight. From published information for beef cattle orchardgrass was rated “Preferred”, smooth brome was rated “Desirable”, and all the assorted weeds were rated “Undesirable”. Adding the 55% Preferred orchardgrass to the 28% Desirable smooth brome equals 83% Forage Value Rating. Table 3 indicates that 90% minimum is needed to make the Very High Forage Value Rating. Since the total of Preferred and Desirable was 83%, the pasture unit contains a High, rather than Very High Forage Value Rating.

Determining Stocking Rates

Stocking rates are usually expressed as animal unit days (AUD’s), animal unit years (AUY’s), or animal unit months (AUM’s). The calculated stocking rates should be part of a carefully prepared grazing management plan that includes a drought management plan, a planned grazing system, and proper grazing use factors. Note the calculated AUM’s are suggested initial stocking rates to be used as a starting point in an overall management plan. These AUM’s should be re-evaluated in above average precipitation, as well as drought years.

Calculating the AUM

The basic animal unit when a range specialist calculates stocking rates is the 1,000 pound cow or cow-calf pair. Studies on range cattle indicate that a 1,000 pound cow and its calf require approximately 30 pounds of air-dry forage per day (900 pounds per month in a 30 day month). NRCS recommends a proper grazing use factor of “take half, leave half” of the annual forage or herbage production, or 50 percent of the current year’s growth of the total herbage produced by a given rangeland ecological site or improved pasture.

Studies on rangeland have found that of the "take half" amount of the forage, only half of that amount is actually used by cattle, while the other half is rendered unusable due to trampling and the deposition of animal wastes. Thus, only one-fourth (25%) of the total pounds of air-dry herbage is available for cattle or other livestock grazing. This percent utilization factor is referred to as "Harvest Efficiency". A 25% harvest efficiency is considered acceptable on extensively managed Western rangelands with relatively low stocking densities. However, on many irrigated, improved pasturelands or pasturelands in more humid areas, livestock producers are utilizing intensive grazing systems, such as short duration-high intensity or high frequency grazing systems. With such grazing systems, paddocks are generally smaller in acre size as compared to Western rangeland pastures, and therefore stocking densities are usually higher. The "Harvest Efficiency" can be relatively high due to the smaller paddock system.

The following is an example of calculating AUM's. Total pounds of air-dry herbage per acre x 0.25 (assumed "Harvest Efficiency") = Adjusted pounds or available pounds of air-dry herbage per acre. Adjusted lbs/ac of forage ÷ 30 lbs (daily cattle need) ÷ 30 days (one month) = AUM's per acre OR Adjusted lbs/ac of forage/900 lbs (forage for 1 AU/mo) = AUM's/ac

To convert AUM's per acre to Acres per AUM, compute the reciprocal of the above: 1 ÷ AUM's per acre = Acres per AUM. For example, assume a loamy rangeland ecological site produced 900 pounds per acre in herbaceous or forage plants. 900 lbs total forage per acre x 0.25 = 225 lbs. adjusted pounds of forage per acre. 225 lbs. ÷ 30 lbs. ÷ 30 days = 0.25 AUM's per acre. 1 ÷ 0.25 AUM's per acre = 4.0 acres per AUM. Refer to Chapter 5, pp. 5.3-2 and 5.3-3, of the National Range and Pasture Handbook for additional information on calculation of stocking rates.

Adjustment Factors for the AUM

Adjustments for stocking rates are usually necessary for changes in terrain, and distance from watering points on rangeland (Tables 4 and 5).

3/Table 4

Stocking Rate Adjustments for Slope on Rangelands

Percent Slope	Percent Adjustment
0 - 15	0
15 - 30	30
31 - 60	60
>60	100

3/ Note: Table 3-12, Page 5.3-1, Chapter 5, 1997 National Range and Pasture Handbook

4/Table 5

Stocking Rate Adjustments for Watering Point Distribution on Rangelands

Distance (Miles)	Percent Adjustment
0.5 - 1	0
1 - 2	50
2 - 3	75

4/ Note: Table 3-13, Page 5.3-1, Chapter 5, 1997 National Range and Pasture Handbook

Adjusting Stocking Rates for Kinds and Classes of Livestock

A stocking rate is generally developed around the cow-calf pair. If other livestock are involved stocking rates should be adjusted accordingly. Adjustments are made by applying animal unit equivalents or AUE's (Table 6). For example: 5 sheep AUE's = 1 cow-calf pair AUE; 1 bull AUE = 1.35 cow-calf pair AUE's.

5/Table 6

Determining Animal Unit Equivalents

Kinds and Classes of Livestock	Animal Unit Equivalents (AUE's)
Cow, dry	1.00
Cow-calf pair	1.00
Bull	1.35
Steer/Heifer, 1 year old	0.60
Steer/Heifer, 2 year old	0.80
Horse	1.25
Sheep	0.20
Goat	0.15

5/ Note: Table 6-5; Page 6-9, Chapter 6, 1997 National Range and Pasture Handbook

After inventorying the number, kinds, and classes of animals, apply the animal unit equivalents to determine the needed number of AUM's for a particular operation. The total number of needed AUM's compared to the total number of available AUM's for a given operation will indicate whether operation has a surplus (is under stocked), deficiency (is over stocked), or is at carrying capacity.

REFERENCES:

Habich, E.F. 2001. Ecological Site Inventory, Technical Reference 1734-7. Bureau of Land Management. Denver, CO, USA. BLM/ST/ST-01/003+1734. 112pp.

Heady, H.F. and R.D. Child. 1994. Rangeland Ecology and Management. Westview Press, Boulder, CO, USA. 521 p.

USDA, Natural Resources Conservation Service. 1997. National Range and Pasture Handbook.

USDA, Soil Conservation Service. 1976. National Range Handbook.