United States Department of Agriculture
Natural Resources Conservation Service

Prepared By:

Mark A Scarpitti, CCA
NRCS State Agronomist, Ohio

Barry Fisher
NRCS State Agronomist, Indiana

Tony Bailey
NRCS State Nutrient Specialist, Indiana

Ohio and Indiana Soil and Water Quality System
Nutrient Management (590)

This Conservation Management System (CMS) combines practices that work together to reduce energy consumption, improve soil and water quality. They are to be planned and contracted together as listed below. The Soil and Water Quality System, Nutrient Management (590) payment is NOT to be used in combination with any other conservation management system payment, nor is it to be used in combination with any other federal program such as CSP or CRP for the same practice on the same land. If manure is going to be applied to the contracted acres use the Waste Utilization (633) management system rather than this system.

This system assumes adequate drainage. Practices may not be feasible without adequate subsurface drainage. If soils are not adequately drained, a systematic tile system should be considered prior to contracting this conservation management system.

Base Level Activities:

To qualify for any of these payments, the participant must have:

1) All gully erosion controlled.
2) All tile breaks repaired within a year of the contract being signed.

Payment Considerations:

(See the "Definitions and Payment Considerations" section (pages 5-7) for more specific payment considerations.)

1) All supporting practices must be initiated prior to issuing the (590) Nutrient Management payment.
2) Fertilizer application records must be available to the District Conservationist (DC) for review.
3) Soil test records must be presented to the DC for review.
4) If the Controlled Traffic option is selected, a geo-referenced traffic map will be submitted to the DC for review prior to this payment being issued.
5) For Nutrient Management, Enhanced, prior to issuing the 590 Nutrient Management payment, a copy of the VRT nutrient management plan developed by a Certified Crop Advisor (CCA), or a Certified Professional Agronomist (CPAg), utilizing the Purdue MMP program and Ohio Templates (if in Ohio) will be submitted to the DC including yield maps, grid or zone maps along with geo-referenced biennial soil reports.
6) The participant must sign the self certification form verifying that supporting practices have been adopted and that the 590 Nutrient Management practice standard and the Tri-State Fertility Guide for Phosphorus and Potassium were followed on all contracted acres. Nitrogen rates will be based on the economic threshold models developed by Purdue University or The Ohio State University.
7) Some payment rates have been rounded and may differ slightly in actual conservation program contracts.

Soil and Water Quality System, Nutrient Management Basic

Base Level Activities:
To qualify for this system payment, the participant must have:
1) All gully erosion controlled.
2) All tile breaks will be repaired within a year of the contract being signed.

In addition to the Base Level Activities described above the following supporting practices must be applied:
Practice payments can be contracted only if the participant has not previously adopted the practice on the enrolled acres.
See Definitions and Payment Considerations on pages 5-8 of this document for more detailed descriptions of practices.

Practice Code	Supporting Practice Name	Payment Unit	Payment Type	Rate	Potential Payment
328	Conservation Crop Rotation (if applicable*)	AC	PR	$7.00	$5,250.00
	• No back to back low residue crops (unless a cover crop is established during at least one year of low residue crops) (Wheat with stubble removed (<8 inches) constitutes a low residue crop) Simply adding cover crops to an existing crop rotation would not constitute a change in rotation. *This practice does not apply to, and is not needed for pastureland, hayland, orchards, vineyards or other land uses where crops are grown occasionally only to facilitate renovation or re-establishment of perennial vegetation.				
345	Option 1: Residue and Tillage Management, Mulch Tillage	AC	PR	$11.00	$8,250.00
OR	• Maintains >30% crop residue (or utilizes cover crops) necessary to keep sheet and rill erosion at or below "T" The producer must make a significant change from a more intensive tillage system to receive this payment.				
329-346	Option 2: Residue and Tillage Management, No Tillage	AC	PR	$19.00	$14,250.00
	• Utilizes a non-inversion tillage practice such as NoTill, StripTill, Direct Seed, or RidgeTill (Residue and Tillage Management Practices 329 or 346) every year of the contract • No full width tillage allowed The producer must make a significant change from a more intensive tillage system to receive this payment. Fertility, pH and weed control should be conducive to No-Till				
590	Nutrient Management System, Basic	AC	PR	$10.00	$7,500.00
	This payment cannot be issued until all other supporting practices have been initiated. This is because this practice should account for the supporting practices of the conservation system. • The OH 590 Nutrient Management practice standard must be followed using the 4 Rs (See definitions Pg 5) • Continue to soil test through the life of the contract (1 composite sample per 15 ac. every 2 yrs.) • Urease Inhibitors will be applied with UAN or Urea that is surface applied in the spring • Phosphorus and potassium fertilizer application will not exceed the Tri-State Fertility Guide (Ext. Bulletin E-2567) recommendations • Nitrogen rates will be based on the economic threshold models developed by Purdue University or The Ohio State University • No commercial nitrogen will be fall applied for corn • No fertilizer will be applied on frozen or snow covered ground • Maintains accurate fertilizer application records per field				

***** Items shown in Blue text are new practices to the Nutrient Management Level***
***** Items shown in Red text are of special importance***

Soil and Water Quality System, Nutrient Management Enhanced

Base Level Activities:
To qualify for this system payment, the participant must have:
1) All gully erosion controlled.
2) All tile breaks repaired within a year of the contract being signed

In addition to the Base Level Activities described above the following supporting practices must be applied:
Practice payments can be contracted only if the participant has not previously adopted the practice on the enrolled acres.
See Definitions and Payment Considerations on pages 5-8 of this document for more detailed descriptions of practices.

Practice Code	Supporting Practice Name	Payment Unit	Payment Type	Rate	Potential Payment
328	Conservation Crop Rotation (if applicable*)	AC	PR	$7.00	$5,250.00
	• No back to back low residue crops (unless a cover crop is established during at least one year of the low residue crops) (Wheat with stubble removed (<8 inches) constitutes a low residue crop) Simply adding cover crops to an existing crop rotation would not constitute a change in rotation. *This practice does not apply to, and is not needed for pastureland, hayland, orchards, vineyards or other land uses where crops are grown occasionally only to facilitate renovation or re-establishment of perennial vegetation.				
345	Option 1: Residue and Tillage Management, Mulch Tillage	AC	PR	$11.00	$8,250.00
OR	• Maintains >30% crop residue necessary to keep sheet and rill erosion at or below "T" The producer must make a significant change from a more intensive tillage system to receive this payment.				
329-346	Option 2: Residue and Tillage Management, No Tillage	AC	PR	$19.00	$14,250.00
	• Utilizes a non-inversion tillage practice such as NoTill, StripTill, Direct Seed, or RidgeTill (Residue and Tillage Management Practices 329 or 346) every year of the contract • No full width tillage allowed The producer must make a significant change from a more intensive tillage system to receive this payment. Fertility, pH and weed control should be conducive to No-Till				
720	Controlled Traffic Farming (Optional*)	AC	PR	**$20.00-$50.00	$37,500.00
	• Utilizes a Residue and Tillage Management Practice every year of the contract • The OH Interim Controlled Traffic Farming practice standard must be followed • Utilizes RTK automatic steering technology for high load field traffic *This practice is optional and as such is not necessary in order to participate in this conservation system. **Payment is based on the percentage of wheel traffic achieved. (<=25% $50 / Ac) (26%-35% $30 / Ac) (36%-50% $20 / Ac).				
340	Cover Crops	AC	PR	**$28-$40	$30,000.00
	• Must follow the Cover Crop (340) Practice Standard and Job Sheet • Utilizes Cover Crops (340) on a minimum of 30% of the contracted acres over the life of the contract **Payment is based on the type of cover crop utilized, the method of seeding and the acres of cover crops established				

***** 590*** ***Nutrient Management System, Enhanced - is continued on the back of this page***

Practice Code	Supporting Practice Name	Payment Unit	Payment Type	Rate	Potential Payment
386-390-393	Field Border / Riparian Herbaceous Cover / Filter Strip See Definitions starting on page 5 for details	AC	PR	**$190-$400	$8,000.00
	• A herbaceous buffer will be established along all perennial streams, ponds, lakes, wetlands in the contracted acres *Payment is based on the acres established. This is a one time payment for newly established buffers Calculation is based on 5% of 750 acres x $400 / ac				
590	Nutrient Management System, Enhanced	AC	PR	$30.00	$22,500.00
	This payment cannot be issued until all other supporting practices have been initiated This is because this practice should account for the supporting practices of the conservation system • The OH 590 Nutrient Management practice standard must be followed using the 4 Rs (See definitions Pg5) • Phosphorus and potassium fertilizer application will not exceed the Tri-State Fertility Guide (Ext. Bulletin E-2567) recommendations • Nitrogen rates will be based on the economic threshold models developed by Purdue University or The Ohio State University • No commercial nitrogen will be fall applied for corn • No fertilizer will be applied on frozen or snow covered ground • Maintains accurate fertilizer application records per field • A geo-referenced Variable Rate Technology grid or zone precision nutrient management plan will be developed using the Purdue MMP program and the Ohio Templates by a CCA or CPAg reflecting the other practices in the conservation management system above • Biennial geo-referenced split soil tests will be taken (0-3" & 3"-6") to analyze surface and soil test phosphorus • Lime, phosphorus and potassium fertilizer are applied according to the VRT nutrient management plan developed above • Phosphorus fertilizer must be applied to a growing crop or cover crop. As an alternative it can be banded, injected, strip tilled or lightly incorporated				
587-656-795	Structure for Water Control / Constructed Wetland / Bio Reactor*	NUM	PR	$792-$1556	$15,000.00
	• Recommended (where technically feasible as determined by an NRCS or DNR engineer) on all tile outlets • A Constructed Wetland standard (656) or Bio Reactor (747) impregnated with a sorbent can be used as an alternative to (587) *These practices are optional and as such are not necessary in order to participate in this conservation system.				
554	Drainage Water Management (required if 587 is installed)	NUM	PR	$100	$1000.00
	• Follow the 554 Drainage Water Management practice standard This practice is required if 587 is installed above				

Definitions and Payment Considerations

Soil and Water Quality System
Nutrient Management (590)

328 - Conservation Crop Rotation
Definition: Growing crops in a recurring sequence on the same field.

In order to receive a payment for this supporting practice, there needs to be a significant change from the rotation the producer is currently using. Examples of change would be 1) Changing from a corn-soybean rotation to a corn-soybean-wheat rotation 2) Substituting high residue crops for low residue crops. As a management practice in EQIP, payment can be made for up to 3 years if needed to adopt the practice. This practice does not apply to, and is not needed for pastureland, hayland, orchards, vineyards or other land uses where crops are grown occasionally only to facilitate renovation or re-establishment of perennial vegetation. The conservation crop rotation will be considered initiated and payment can be made when the first crop of the rotation is planted. If weather or other factors dictate a back to back low residue crop, a cover crop must be established. The producer will self certify the fields and crops used each year of the contract on an aerial photo. This is subject to spot checks.

329 / 345 / 346 - Residue and Tillage Management, NoTill, StripTill, RidgeTill, Mulch Till
Definition: Managing the amount, orientation and distribution of crop and other plant residue on the soil surface year round while limiting soil-disturbing activities to only those necessary to place nutrients, condition residue and plant crops.

The producer must utilize NoTill, StripTill, RidgeTill or MulchTill for the life of the contract. The combination of crop roation and conservation tillage utilized must keep soil loss at or below T (tolerable soil loss). In order to receive a payment for this supporting practice, there needs to be a significant change from the type of tillage the producer is currently using. Examples would be 1) converting from a chisel / disk system to NoTill or 2) converting from rotational NoTill to continuous NoTill. To qualify for payment under this practice, the tillage system must be NoTill, StripTill, RidgeTill, or Mulch Till every year for the life of the contract. As a management practice in EQIP, payment can be made for up to 3 years if needed to adopt the practice. The producer will self certify that NoTill, StripTill, RidgeTill or Mulch Till was used each year of the contract.

340 - Cover Crops
Definition: Crops including grasses, legumes and brassicas for seasonal cover and other conservation purposes.

In order to receive a payment for this supporting practice, there needs to be a significant change from system the producer is currently using. If the producer has a history of utilizing cover crops successfully in a conservation system, then payment cannot be authorized. As a management practice in EQIP, payment can be made for up to 3 years if needed to adopt the practice. For Nutrient Management Enhanced, Cover Crops must be utilized on a minimum of 30% of the contracted acres over the life of the contract. Additional acres may be contracted.

Payment is based on the type of cover crop utilized, the method of seeding and the acres of cover crops established. The producer is responsible for making sure the cover crop is successfully established. The producer will self certify each year the location, acres and type of cover crops established. This is subject to spot checks.

386 / 390 / 393 - Field Border / Riparian Herbaceous Cover / Filter Strip

Definition: In order to receive payment for this supporting practice, a herbaceous buffer must be newly established as per the 386, 390 or 393 practice standards along all perennial streams, ponds, lakes, wetlands in the contracted acres . See standards for width requirements. Payments cannot be made for existing buffers. This is a one time payment to establish the practice. As an alternative, these buffers can be enrolled in CRP; however the producer cannot receive payment under both CRP and EQIP for the same practice on the same land. Existing buffers are credited but cannot receive a payment for establishment.

587 - Structure for Water Control

Definition: A structure at the end of a tile or subsurface drain. It is utilized to control the water elevation or temporarily block water flow. It must have an inspection port for monitoring and pumping water if needed to maintain water quality.

These are recommended if feasible as determined by an NRCS or DNR engineer. This *Soil and Water Quality System* was developed for up to ten structures. Payment will vary depending on the size of the structure needed. This is a one time payment for installing the structure. Structures must be managed according to practice standard 554 Drainage Water Management.

554 - Drainage Water Management

Definition: The process of managing water discharges from 587 Structures for Water Control subsurface agricultural drainage systems.

In order to receive a payment for this supporting practice, a 587 Structure for Water Control must have been newly installed as part of this same contract. If no structure was installed then payment is not authorized. Payment can be made for up to ten structures. As a management practice in EQIP, payment can be made for up to 3 years if needed to adopt the practice. Management will be recorded on the 555 Drainage Water Management job sheet following the guidance of the Purdue University publication WQ-44 “Questions and Answers - Drainage Water Management for the Mid-West”. The producer will self certify that the structure was managed as designated. This is subject to spot checks.

656 - Constructed Wetland

Definition: An artificial ecosystem with hydrophytic vegetation for water treatment.

This practice is intended to be an alternative to the practice 587 Structure for Water Control described above. Once installed, this practice does not require the routine management that practice 587 requires. In order to receive a payment for this supporting practice, a 656 Constructed Wetland must have been newly installed as part of this same contract. If no wetland was installed then payment is not authorized. Payment can be made for up to ten wetlands.

This is a one time payment for constructing the wetland.

795 - Bio Reactor

Definition: A structure containing a carbon source and sorbent installed to intercept subsurface drain (tile) flow or ground water, and reduce the concentration of nitrate-nitrogen and soluble phosphorus.

This practice is intended to be an alternative to the practice 587 Structure for Water Control described above. In order to receive a payment for this supporting practice, a 795 Bio Reactor must have been newly installed as part of this same contract. If no bio reactor was installed then payment is not authorized. Payment can be made for up to ten reactors.

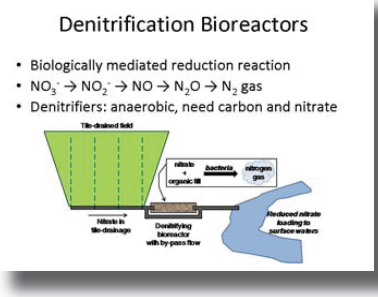

590 - Nutrient Management

Definition: Managing the **right source,** the **right rate**, the **right timing** and the **right placement** (4R's of nutrient management) of nutrients and soil amendments. **This payment cannot be issued until all other supporting practices have been initiated. This is because this practice should account for the supporting practices of the conservation system.** In order to receive a payment for this practice, the 590 Nutrient Management practice standard must be followed. In addition, there are other requirements under each level of nutrient management that must be followed as listed below:

Management Basic	Management Enhanced
• The OH 590 Nutrient Management practice standard must be followed using the 4 Rs (See definitions Pg 9) • Continue to soil test through the life of the contract (1 composite sample per 15 ac. every 2 yrs.) • Urease Inhibitors will be applied with UAN or Urea that is surface applied in the spring • Phosphorus and potassium fertilizer application will not exceed the Tri-State Fertility Guide (Ext. Bulletin E-2567) recommendations • Nitrogen rates will be based on the economic threshold models developed by Purdue University or The Ohio State University • No commercial nitrogen will be fall applied for corn • No fertilizer will be applied on frozen or snow covered ground • Maintains accurate fertilizer application records per field	• The OH 590 Nutrient Management practice standard must be followed using the 4 Rs (See definitions Pg 9) • Phosphorus and potassium fertilizer application will not exceed the Tri-State Fertility Guide (Ext. Bulletin E-2567) recommendations • Nitrogen rates will be based on the economic threshold models developed by Purdue University or The Ohio State University • No commercial nitrogen will be fall applied for corn • No fertilizer will be applied on frozen or snow covered ground • Maintains accurate fertilizer application records per field • A geo-referenced Variable Rate Technology grid or zone precision nutrient management plan will be developed using the Purdue MMP program and the Ohio Templates by a CCA or CPAg reflecting the other practices in the conservation management system above • Biennial geo-referenced split soil tests will be taken (0-3" & 3"-6") to analyze surface and soil test phosphorus • Lime, phosphorus and potassium fertilizer are applied according to the VRT nutrient management plan developed above • Phosphorus fertilizer must be applied to a growing crop or cover crop. As an alternative it can be banded, injected, strip tilled or lightly incorporated.

Nutrient Management Plan

Definition: A plan that documents the **right source**, the **right rate**, the **right timing** and the **right placement** of nutrients and soil amendments. The 590 Nutrient Management practice standard is the guidance to be used in developing the plan. **The Purdue Manure Management Planner (MMP) will be used to develop CNMPs, Nutrient Management Plans and Precision Nutrient Management Plans utilizing the Ohio templates (when developed for Ohio EQIP participants).** The purposes of a nutrient management plan are: 1) To adequately supply nutrients for plant production; 2) To properly utilize manure or organic by-products as a plant nutrient source; 3) To minimize agricultural nonpoint source pollution of surface and ground water resources; 4) To improve chemical and biological condition of soil.

NOTE: The nutrient management plan should incorporate the supporting practices of this conservation system. Under the Enhanced Nutrient Management a Variable Rate Technology (VRT) Grid or Zone nutrient management plan must be developed by a CCA or CPAg using the Purdue MMP program and the Ohio Templates (when developed in Ohio). Fertilizer rates calculated for the rotation can be made in one application as long as the 1) Nutrient Management Plan is being followed 2) The application rate does not exceed the limits set forth in the 590 Nutrient Management practice standard and 3) The fertilizer is applied to a growing drop, or incorporated. The Nutrient Management Plan, as well as GIS maps with geo-referenced biennial soil test reports must be submitted to the DC prior to the 590 Nutrient Management payment being issued. As a management practice in EQIP, payment can be made for up to 3 years if needed to adopt the practice. The producer and the CCA or CPAg will certify annually that the nutrient management plan is being followed. This is subject to spot checks.

Tri-State Fertility Guide:

Definition: The Tri-State Fertility Guide (Extension Bulletin E-2567), is a publication developed by Ohio, Indiana, and Michigan. Among other things, it provides lime, phophorus and potassium fertilizer recommendations for corn, soybean, small grain, and meadow crops. The Tri-State Fertility Guide should be used to set the **maximum** rate of phosphorus and potassium fertilizer based on soil test values and crop removal rates. Nitrogen rates should be based on current economic threshold models from Purdue University and The Ohio State University.

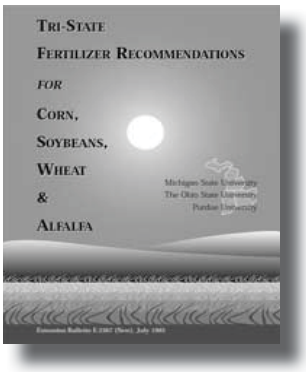

Soil Testing

Definition: A soil test is the analysis of a soil sample to determine nutrient content, composition and other characteristics. Tests are usually performed to measure pH, fertility and indicate deficiencies that need to be remedied.

A **regular soil test** is a composite of 15-20 soil samples that are combined and mixed thoroughly. A sample is then sent for analysis. The report from the analysis is used to determine the rate of lime and nutrients based on the soil test values and the crop to be grown. The composite sample must represent 15 acres or less.

Precision Nutrient Management Plan using Variable Rate Technology (VRT)

A **Grid Sampling** divides the field into square grids representing 2 - 6 acres. Several soil samples are pulled from each square in the grid and combined to form a composite sample representing that square. Lime, phosphorus and potassium fertilizer can then be varied across the grid applying just the nutrients needed in each square. The grids cannot represent more than 6 acres. **If a grid sampling method is utilized, the Precision Nutrient Management Plan, as well as GIS maps with geo-referenced biennial soil test reports must be submitted to the DC prior to the 590 Nutrient Management payment being issued.**

Management Zones is a system which groups similar soil characteristics in a field as well as other factors of interest. For example, a common system of management zones overlays soils maps with crop yield maps. Polygons are then drawn around areas of the field that have similar soils and crop yield characteristics. Several soil samples are pulled from each zone and combined to form a composite sample representing that zone. Each zone must represent 12 acres or less. These zones are located using GPS technology. Lime, phosphorus and potassium fertilizer can then be varied across the zones applying just the nutrients needed in each zone.

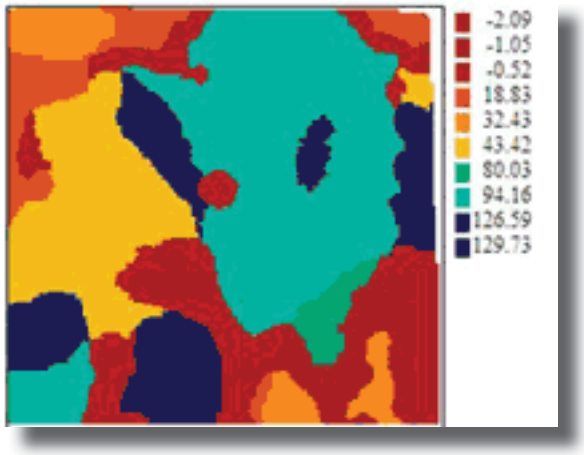

If a management zone method of sampling is utilized, the Precision Nutrient Management Plan, as well as GIS maps with geo-referenced biennial soil test reports must be submitted to the DC prior to the 590 Nutrient Management payment being issued.

720- Controlled Traffic Farming (CTF):

Definition: Controlled Traffic Farming is confining all high wheel load traffic in the farming system to the same set of wheel tracks year after year. The result limits compaction to the wheel tracks and reduces soil compaction outside of the tracks for improved water infiltration and crop growth. The 720 Interim Controlled Traffic Farming practice standard must be followed keeping traffic lanes to less than 50% of the surface area.

High wheel load traffic is defined as any tire or track that bears a higher load than 6000 pounds at 30 psi (equivalent to 6 tons per axle). Equipment with duals would need to reduce the load to 3000 pounds per tire to maintain the 6 tons per axle.

Keep in mind that compaction is greatly impacted by soil texture and soil moisture. A trip across the field in a pickup truck on a coarse textured soil under dry conditions would suffer very little by compaction. Whereas that same truck across a heavy moist soil can cause a great deal of compaction. It is best to use the permanent wheel tracks for all field operations if you are serious about controlling compaction. Studies have shown that in conventional farming, up to 85% of the field becomes compacted from heavy machinery. Compaction causes a decreased soil infiltration, a decrease in the air and water holding capacity in the soil, higher water runoff and soil erosion, and decreased yields.

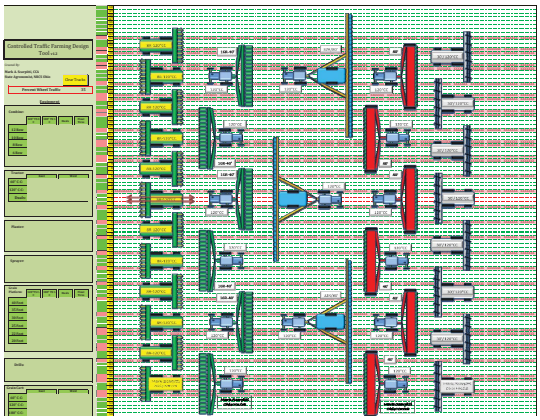

Controlled Traffic Farming requires modifying equipment so that tire spacing center to center match, allowing tires to run on the same permanent wheel tracks. Operators must commit to driving down the same tramlines for each field operation year after year. The most effective way is to use a Real Time Kinematic (RTK) autosteer system that ensures accuracy. All high load traffic must utilize the established tramlines. Once the tracks are established and clearly visible, some field operations such as broadcasting fertilizer, won't need the RTK accuracy. Other field operations such as fertilizer banding, strip tillage, side dressing, planting, spraying and harvesting will benefit from that accuracy.

Custom fertilizer applicators using flotation tires may not be able to run between the rows using the established traffic patterns. This is permissible as long as they run half loads.

NOTE: If the controlled traffic option is chosen as part of this Soil and Water Quality System, a GIS map showing the traffic pattern must be presented to the DC before payment will be issued. RTK / GPS auto steer technology must be utilized throughout the life of the contract. RTK systems only will be considered. The producer will self certify that the controlled traffic plan was followed. This is subject to spot checks.

Payment is based on the percentage of wheel traffic achieved.
(<=25% $50 / Ac) (26%-35% $30 / Ac) (36%-50% $20 / Ac)

Self Certification Form

Soil and Water Quality System
Nutrient Management (590)

Nutrient Management, Basic:

This form is intended to be signed by the producer prior to practice payment. The producer certifies that the practices were installed or adopted as planned. This certification is subject to review and spot checks.

ALL PRACTICES THAT ARE SELF CERTIFIED FOR PAYMENT ARE SUBJECT TO SPOT CHECKS

Participant:	EQIP Contract Number:	Year:
328 Conservation Crop Rotation:		
A. The crops grown in rotation produced sufficient residue to keep soil erosion within acceptable soil loss levels B. No back to back low residue crops (such as soybeans) were grown without a cover crop (Wheat with stubble removed (<8 inches) constitutes a low residue crop) C. Crops were sufficiently rotated to break pest cycle On an aerial photo of the contracted acres, write the crops planted in each field.		
By signing below, I certify that I followed the criteria above on the contracted acres for the year listed on the top of this form:		
Signature of Participant:	Date:	
345 Option 1: Residue and Tillage Management, MulchTill:		
A. Crop residue was uniformly distributed on the soil surface The combination of crop rotation and tillage were reviewed by the DC and found to be within tolerable rates of soil loss. On an aerial photo of the contracted acres, indicate the tillage used in each field.		
By signing below, I certify that I followed the criteria above on the contracted acres for the year listed on the top of this form:		
Signature of Participant:	Date	
329 / 346 Option 2: Residue and Tillage Management, NoTill, StripTill, RidgeTill:		
A. Crop residue was uniformly distributed on the soil surface B. No full width tillage was performed On an aerial photo of the contracted acres, write the tillage used in each field.		
By signing below, I certify that I followed the criteria above on the contracted acres for the year listed on the top of this form::		
Signature of Participant:	Date	:
590 Nutrient Management System, Basic		
A. The OH 590 Nutrient Management practice standard was followed using the 4 Rs (right source, right rate, right timing, right placement) B. Soil test through the life of the contract (1 composite sample per 15 ac. every 2 yrs.) C. Phosphorus and Potassium fertilizer application rates did not exceed Tri-State Fertility Guide (Ext. Bulletin E-2567) recommendations D. Nitrogen application rates were based upon current economic threshold models from Purdue University or The Ohio State University E. No nitrogen fertilizer was fall applied for corn F. No fertilizer was applied on frozen or snow covered ground G. Maintained accurate fertilizer application records per field Must submit copies of the soil test reports.		
By signing below, I certify that I followed the criteria above on the contracted acres for the year listed on the top of this form:		
Signature of Participant:	Date:	

Soil and Water Quality System, Nutrient Management (590) - Self Certification Form

Nutrient Management Enhanced:

ALL PRACTICES THAT ARE SELF CERTIFIED FOR PAYMENT ARE SUBJECT TO SPOT CHECKS

Participant:	EQIP Contract Number:	Year:
328 Conservation Crop Rotation:		
A. The crops grown in rotation produced sufficient residue to keep soil erosion within acceptable soil loss levels B. No back to back low residue crops (such as soybeans) were grown without a cover crop (Wheat with stubble removed (<8 inches) constitutes a low residue crop) C. Crops were sufficiently rotated to break pest cycle On an aerial photo of the contracted acres, write the crops planted in each field.		
By signing below, I certify that I followed the criteria above on the contracted acres for the year listed on the top of this form:		
Signature of Participant:	Date:	
345 Option 1: Residue and Tillage Management, MulchTill:		
A. Crop residue was uniformly distributed on the soil surface The combination of crop rotation and tillage were reviewed by the DC and found to be within tolerable rates of soil loss. On an aerial photo of the contracted acres, indicate the tillage used in each field.		
By signing below, I certify that I followed the criteria above on the contracted acres for the year listed on the top of this form:		
Signature of Participant:	Date:	
329-346 Option 2: Residue and Tillage Management, NoTill, StripTill, RidgeTill:		
A. Crop residue was uniformly distributed on the soil surface B. No full width tillage was performed On an aerial photo of the contracted acres, write the tillage used in each field.		
By signing below, I certify that I followed the criteria above on the contracted acres for the year listed on the top of this form:		
Signature of Participant:	Date:	
720 Controlled Traffic Farming (Optional)		
• Utilized a Residue and Tillage Management Practice every year of the contract • The Interim 720 Controlled Traffic Farming Practice Standard was followed keeping traffic lanes to 50% or less of the surface area • Utilized RTK automatic steering technology for high load field traffic . Submit a GIS map showing the controlled traffic pattern on an aerial photo with the tillage used in each field.		
By signing below, I certify that I followed the criteria above on the contracted acres for the year listed on the top of this form:		
Signature of Participant:	Date:	

Nutrient Management Enhanced (continued):

ALL PRACTICES THAT ARE SELF CERTIFIED FOR PAYMENT ARE SUBJECT TO SPOT CHECKS

Participant:	EQIP Contract Number:	Year:

340 Cover Crops:

A. Cover Crops (340) were utilized on a minimum of 30% of the contracted acres either
- on yearly basis
- or over the life of the contract

Payment is based on the type of cover crop utilized, the method of seeding and the acres of cover crops established.
On an aerial photo of the contracted acres, indicate the location and type of cover crops planted in each field.

By signing below, I certify that I followed the criteria above on the contracted acres for the year listed on the top of this form:

Signature of Participant:	Date:	

386 / 390 / 393 Field Border / Riparian Herbaceous Cover / Filter Strip:

A. A herbaceous buffer has been established along all perennial streams, ponds, lakes, wetlands in contracted acres

This is a one time payment based on acres planted.
On an aerial photo of the contracted acres, indicate the width and location of buffer.

By signing below, I certify that I followed the criteria above on the contracted acres for the year listed on the top of this form:

Signature of Participant:	Date:	

587 /656 / 795 Structure for Water Control / Constructed Wetland / Bio Reactor:

- Recommended (where technically feasible as determined by an NRCS or DNR engineer) on all tile outlets
- A Constructed Wetland standard (656) or Bio Reactor (747) impregnated with a sorbent can be used as an alternative to (587)

By signing below, I certify that I followed the criteria above on the contracted acres for the year listed on the top of this form:

Signature of Participant:	Date:	

590 Nutrient Management System, Enhanced

This nutrient management plan should account for the supporting practices of the conservation system.

A. The OH 590 Nutrient Management practice standard was followed using the 4 Rs (See definitions Pg 9)
B. Urease Inhibitors were applied with UAN or Urea that was surface applied in the spring.=
C. Phosphorus and Potassium fertilizer application rates did not exceed the Tri-State Fertility Guide (Ext. Bulletin E-2567) recommendations
D. Nitrogen appication rates were based upon current economic threshold models from Purdue University or The Ohio State University
E. No nitrogen fertilizer was fall applied for corn
F. No fertilizer was be applied on frozen or snow covered ground
G. Maintained accurate fertilizer application records per field
H. A geo-referenced Variable Rate Technology grid or zone nutrient management plan was developed using the Purdue MMP program and the Ohio Templates by a CCA or CPAg reflecting the other practices in the conservation management system above. Requires biennial soil tests
I. Biennial geo-referenced split soil tests were taken (0-3" & 3"-6") to analyze surface and soil test Phosphorus using the VRT nutrient management plan developed above
J. Phosphorus fertilizer was applied to a growing crop or cover crop. As an alternative it can be banded, injected, strip tilled or lightly incorperated
K. Maintained accurate fertilizer application records

A Variable Rate Technology (VRT) grid or zone nutrient management plan, developed by a CCA or CPAg using the Purdue MMP progrram and the Ohio templates, as well as GIS maps with geo-referenced biennial soil test reports must be submitted to the DC.
This payment cannot be issued until all other supporting practices have been initiated.

By signing below, I certify that I followed the criteria above on the contracted acres for the year listed on the top of this form:

Signature of Participant:	Date:	
Signature of CCA:	CCA Number:	Date: