UNITED STATES DEPARTMENT OF AGRICULTURE
NATURAL RESOURCES CONSERVATION SERVICE

GEORGIA STANDARD DRAWINGS - 24' WIDE POULTRY LITTER DRY STACK FACILITY CONSTRUCTED WITH ALTERNATING 6" X 6" & 4" X 6" POSTS AND ENGINEERED TRUSSES SPACED 4' O.C.

1. *THE FOLLOWING DRAWINGS WERE PREPARED IN ACCORDANCE WITH PRACTICE CODE 313 – WASTE STORAGE FACILITY AND GEORGIA BUILDING CODE (INTERNATIONAL BUILDING CODE 2006).*

2. *DESIGN DATA REQUIRED BY IBC 2006:*
   - *A) ROOF LIVE LOAD – 19 PSF.*
   - *B) BASIC WIND SPEED OF 90 MPH AND GROUND SNOW LOAD OF 10 PSF OR BASIC WIND SPEED OF 100 MPH AND NO SNOW LOAD.*
   - *C) IMPORTANCE FACTOR, I=0.87.*
   - *D) WIND EXPOSURE CATEGORY C, PARTIALLY ENCLOSED STRUCTURE.*
   - *E) INTERNAL PRESSURE COEFFICIENT = 0.55.*

3. *ENGINEERED TRUSSES SHALL BE DESIGNED TO SUSTAIN THE ABOVE LISTED CONDITIONS AND 865 LBS UPLIFT AT EACH TRUSS TO GIRDER CONNECTION. ONE COPY OF THESE DRAWINGS AND FORM GA–ENG–313E SHALL BE SUBMITTED TO THE TRUSS DESIGNER. THE TRUSS DESIGN DRAWING FROM THE TRUSS COMPANY MUST BE REVIEWED AND APPROVED BY NRCS.*

4. *NOT DESIGNED FOR SIDESHED. NO SIDESHEDS OR ADDITIONS SHOULD BE MADE TO STRUCTURE.*

5. *THIS DESIGN IS NOT INTENDED FOR USE IN EXTREME SOUTH AND EAST COUNTIES OF THE STATE THAT ARE SUBJECT TO HURRICANE WIND LOADS (SEE MAP BELOW).*

6. *THIS DESIGN IS NOT INTENDED FOR CONSTRUCTION ON AN ISOLATED HILL, RIDGE, OR ESCARPMENT IN ANY REGION OF THE STATE.*

7. *ANY CHANGES TO THESE DRAWINGS MUST BE APPROVED BY AN ENGINEER WITH JOB APPROVAL LEVEL IV OR GREATER.*

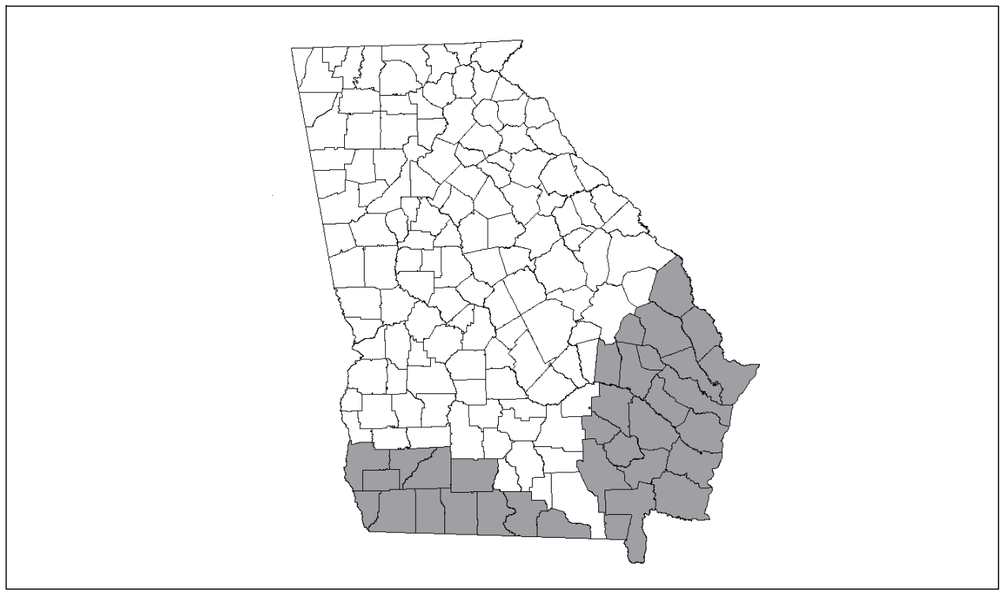

THIS DESIGN IS NOT INTENDED FOR USE IN COUNTIES SUBJECT TO HURRICANE WIND LOADS SHADED GRAY ABOVE.

_____ POULTRY LITTER STACK FACILITY

_____ COUNTY, GEORGIA

PRE–CONSTRUCTION CERTIFICATION:

THE _____ POULTRY LITTER STACK FACILITY WILL BE CONSTRUCTED IN ACCORDANCE WITH THE FOLLOWING DRAWINGS AND PRACTICE CODE 313. ALL CHANGES HAVE BEEN APPROVED BY AN ENGINEER WITH JOB APPROVAL AUTHORITY LEVEL IV OR GREATER. ALL ADDITIONS HAVE BEEN APPROVED BY NRCS.

OWNER DATE | NRCS REPRESENTATIVE DATE | ENGINEER (IF REQUIRED) DATE

AS–BUILT CERTIFICATION:

THIS PRACTICE HAS BEEN CONSTRUCTED IN ACCORDANCE TO THESE PLANS AND MEETS NRCS STANDARDS AND SPECIFICATIONS.

NRCS REPRESENTATIVE DATE | ENGINEER (IF REQUIRED) DATE

INDEX TO DRAWINGS:

SHEET 1 – COVER SHEET

SHEET 2 – ISOMETRIC VIEW
GENERAL NOTES

SHEET 3 – PLAN VIEW

SHEET 4 – ELEVATION VIEW OF ENDWALL
WOOD TREATMENT TABLE

SHEET 5 – SIDE WALL DETAIL
CONCRETE POST FOOTING DETAIL
MECHANICAL POST ANCHOR CONCRETE FOOTING DETAIL

SHEET 6 – TRUSS TO GIRDER CONNECTION DETAIL (WITH POST)
TRUSS TO GIRDER CONNECTION DETAIL (WITHOUT POST)
HURRICANE STRAP DETAILS
FIBER REINFORCED CONTRACTION JOINT DETAIL

SHEET 7 – TRUSS BRACING DETAILS

WASTE STORAGE FACILITY:

JOB CLASS: _____

THE NATURAL RESOURCES CONSERVATION SERVICE
HELPING PEOPLE HELP THE LAND

REVISIONS

DATE	APPROVED	TITLE
09/05	H McFARLAND	STATE ENGINEER
01/06	H McFARLAND	STATE ENGINEER
07/07	H McFARLAND	STATE ENGINEER
06/11	J HOLLOWAY	STATE ENGINEER

		Date
Designed	W. Brown	07/07
Drawn	D. Drewry, S. Rogers, H. McFarland	07/07
Checked	J. Holloway	07/07
Approved	H. McFarland	07/07

GEORGIA POULTRY LITTER DRY STACK FACILITY
(12' or 14' wall 6"x6" Posts Spaced 8'o.c.)
_____ County, GA

NRCS
Natural Resources Conservation Service
United States Department of Agriculture

File No.
ga–eng–313–ps5.pdf

Drawing No.
Cover

06/17/2011 8:57 AM
Sheet 1 of 7

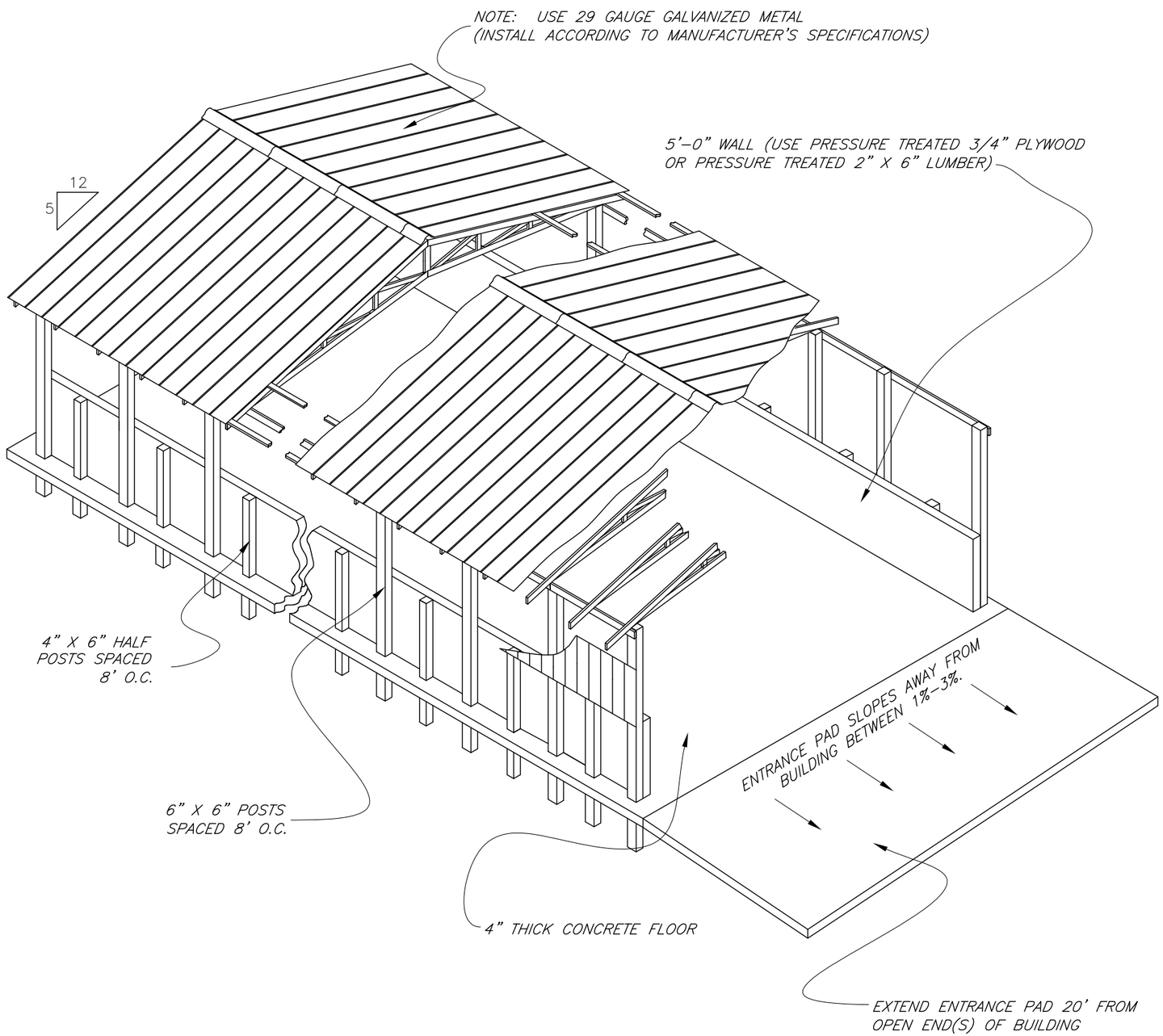

ISOMETRIC VIEW
Not to scale

NOTES:

1. ENCLOSE TWO SIDES AND BOTH GABLE ENDS.
2. ENDWALL OPENING IS OPTIONAL.
3. A 2' 0" OPENING WILL BE INSTALLED BETWEEN THE SIDING AND ROOF OVERHANG ON THE SIDEWALL (SEE SIDEWALL DETAIL ON SHEET 5).
4. DRY STACK FACILITY IS DESIGNED TO STORE DRY POULTRY LITTER. WET LITTER MAY CREATE A FIRE HAZARD. LITTER SHALL BE STACKED NO HIGHER THAN 7' TO REDUCE FIRE HAZARD.
5. ALL ENTRANCE AREAS SHALL BE STABILIZED USING PRACTICE STANDARD 561 – HEAVY USE AREA.
6. ALL POSTS SHALL BE SET IN CONCRETE WITH CONCRETE OR GRAVEL FOOTING PAD (SEE CONCRETE POST FOOTING DETAIL ON SHEET 5).
7. THE BUILDING SITE SHALL BE CLEARED AND GRUBBED AS REQUIRED. PROPER DRAINAGE SHALL BE PROVIDED AROUND THE ENTIRE BUILDING SO THAT RUNOFF WATER DOES NOT ENTER OR POND NEAR BUILDING. DESIGN FOR ROOF RUNOFF IN ACCORDANCE WITH PRACTICE CODE 558 – ROOF RUNOFF MANAGEMENT OR STABILIZE SOIL AROUND BUILDING USING PRACTICE CODE 342 – CRITICAL AREA PLANTING.
8. CONCRETE FLOORS AND FOOTINGS SHALL BE PLACED ON FIRM SOIL. ALL LOOSE SOIL SHALL BE REMOVED. IF FILL MATERIAL IS USED, PLACE IN 9" THICK LAYERS AND COMPACT WITH SHEEPSFOOT ROLLER OR OTHER EQUIVALENT COMPACTION METHOD.
9. TRUSSES SHALL BE DESIGNED BY A PROFESSIONAL ENGINEER LICENSED IN GEORGIA AND WILL BE INSTALLED AS DESIGNED. DESIGNS STAMPED BY A PROFESSIONAL ENGINEER SHALL BE PROVIDED TO NRCS FOR REVIEW.
10. ALL LUMBER, INCLUDING THE POSTS, IN CONTACT WITH LITTER OR CONCRETE SHALL BE PRESSURE TREATED (SEE WOOD TREATMENT TABLE ON SHEET 4).
11. ALL DIMENSION LUMBER EXCEPT TRUSS BRACING SHALL BE SOUTHERN PINE NO. 2 OR BETTER. SEE SHEET 7 FOR TRUSS BRACING REQUIREMENTS.
12. ALL NAILS, BOLTS, AND OTHER CONNECTORS SHALL BE OF HOT–DIPPED ZINC COATED GALVANIZED STEEL, STAINLESS STEEL, SILICON BRONZE, OR COPPER. NAILS SHALL HAVE SPIRALED OR RINGED (ANNULAR) SHANKS. ALL REFERENCES TO "GALVANIZED" IN THIS SET OF DRAWINGS REFERS TO THE ABOVE LISTED COATINGS.
13. POWER SUPPLY TO THE BUILDING IS RECOMMENDED FOR NIGHT OPERATIONS AND REPAIR WORK.
14. ALL DISTURBED AREAS SHALL BE VEGETATED USING PRACTICE CODE 342 – CRITICAL AREA PLANNING.
15. CALL BEFORE YOU DIG:
    1–800–282–7411 OR 770–623–4344.

REVISIONS		
DATE	APPROVED	TITLE
09/05	H. McFarland	State Engineer
01/06	H. McFarland	State Engineer
07/07	H. McFarland	State Engineer

		Date
Designed	W. Brown	07/07
Drawn	D. Drewry, S. Rogers, H. McFarland	07/07
Checked	J. Holloway	07/07
Approved	H. McFarland	07/07

GEORGIA POULTRY LITTER
DRY STACK FACILITY
(12' or 14' wall 6"x6" Posts Spaced 8'o.c.)
_____ County, GA

NRCS
Natural Resources Conservation Service
United States Department of Agriculture

File No.
ga–eng–313–ps5.pdf

Drawing No.
Isometric

8/8/11 9:30 AM
Sheet 2 of 7

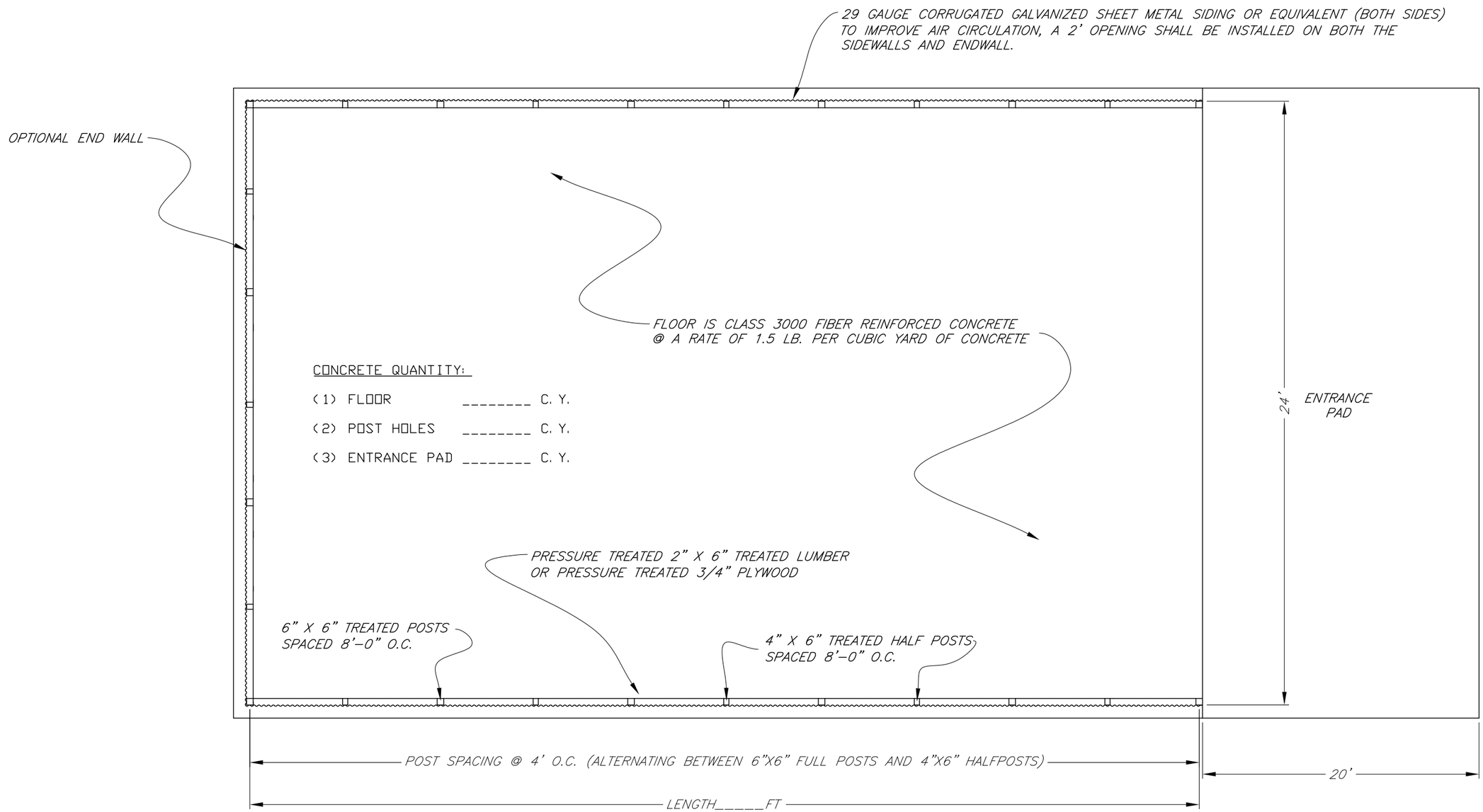

PLAN VIEW
Not to scale

NOTES:

1. CONCRETE AND POST QUANTITIES WILL VARY WITH LENGTH OF FACILITY.
2. ALL 4" X 6" HALF POSTS WILL EXTEND TO THE TOP OF THE INTERIOR WOODEN WALL AND EXTEND 3' INTO THE GROUND AS SHOWN IN THE CONCRETE POST FOOTING DETAIL ON SHEET 5.
3. ALL 6" X 6" POSTS WILL EXTEND INTO THE GROUND A MINIMUM OF 4'-4" AS SHOWN IN THE CONCRETE POST FOOTING DETAIL ON SHEET 5.
4. USE WASTE STORAGE FACILITY COMPUTATION WORKSHEET TO CALCULATE REQUIRED LENGTH. AN ADDITIONAL HORIZONTAL FREEBOARD IS REQUIRED IF NO ENDWALL IS CONSTRUCTED.

REVISIONS		
DATE	APPROVED	TITLE
09/05	H. McFarland	State Engineer
01/06	H. McFarland	State Engineer
07/07	H. McFarland	State Engineer

		Date
Designed	W. Brown	07/07
Drawn	D. Drewry, S. Rogers, H. McFarland	07/07
Checked	J. Holloway	07/07
Approved	H. McFarland	07/07

GEORGIA POULTRY LITTER
DRY STACK FACILITY
(12' or 14' wall 6"x6" Posts Spaced 8'o.c.)
_____ County, GA

NRCS
Natural Resources Conservation Service
United States Department of Agriculture

File No.
ga-eng-313-ps5.pdf

Drawing No.
Plan

8/8/11 9:30 AM

WOOD TREATMENT TABLE

MINIMUM RETENTION RATES IN PCF					
USE	CCA	ACQ-C/D	CBA-A	CA-B	MCA
GROUND CONTACT OR FRESH WATER	0.40	0.40	0.41	0.21	0.15
IMPORTANT STRUCTURAL MEMBERS	0.60	0.60	0.61	0.31	0.23

CCA – CHROMATED COPPER ARSENATE
ACQ–C/D – ALKALINE COPPER QUATERNARY
CBA–A & CA–B – COPPER AZOLE
MCA – MICRONIZED COPPER AZOLE

NOTES:
1. *ALL WOODEN WALLS, HALF POSTS, AND BIN FRONT WOOD SHALL MEET THE GROUND CONTACT RATES.*
2. *ALL SUPPORT POSTS SHALL MEET THE IMPORTANT STRUCTURAL MEMBER RATES.*

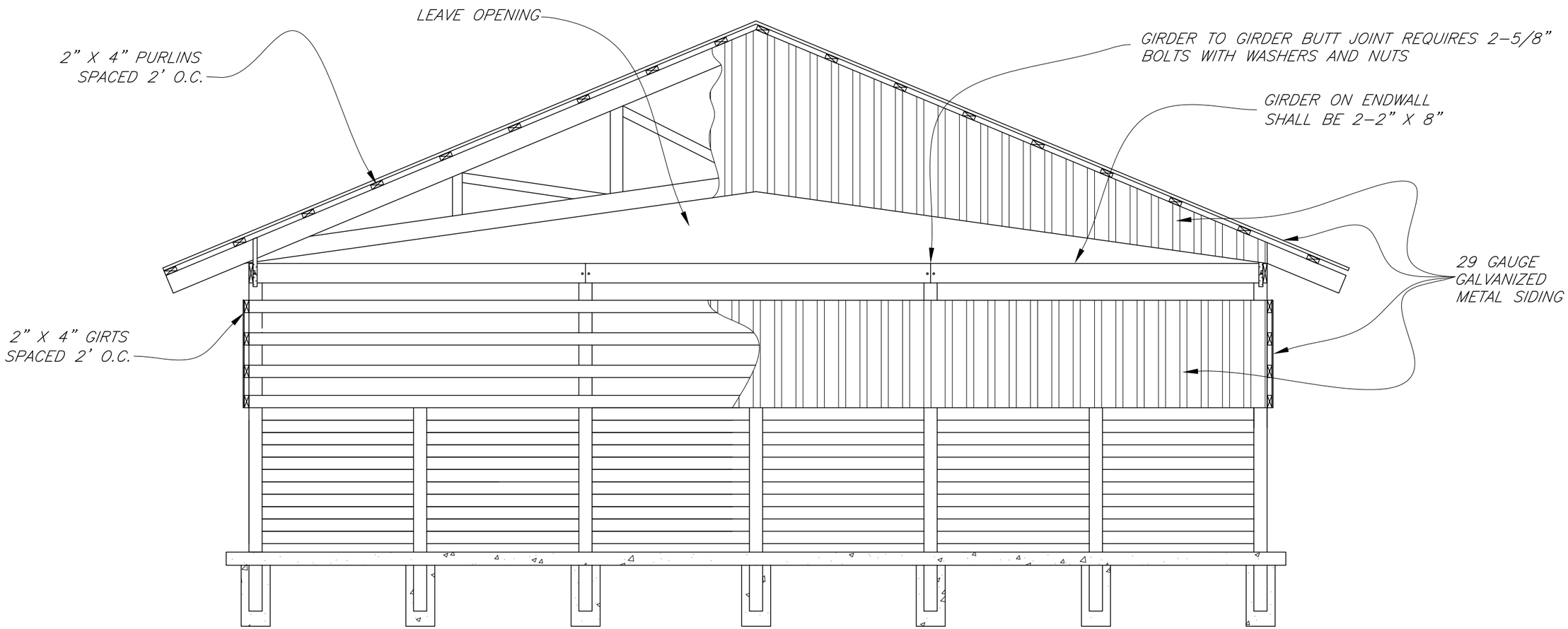

ELEVATION VIEW OF OPTIONAL ENDWALL

Not to scale

REVISIONS		
DATE	APPROVED	TITLE
09/05	H. McFarland	State Engineer
01/06	H. McFarland	State Engineer
07/07	H. McFarland	State Engineer
10/10	J. Holloway	State Engineer

		Date
Designed	W. Brown	07/07
Drawn	D. Drewry, S. Rogers, H. McFarland	07/07
Checked	J. Holloway	07/07
Approved	H. McFarland	07/07

GEORGIA POULTRY LITTER DRY STACK FACILITY
(12' or 14' wall 6"x6" Posts Spaced 8'o.c.)
_____ County, GA

NRCS
Natural Resources Conservation Service
United States Department of Agriculture

File No.
ga–eng–313–pa5_rev 102010.pdf

Drawing No.
Endwall

10/29/2010 9:23 AM

Sheet 4 of 7

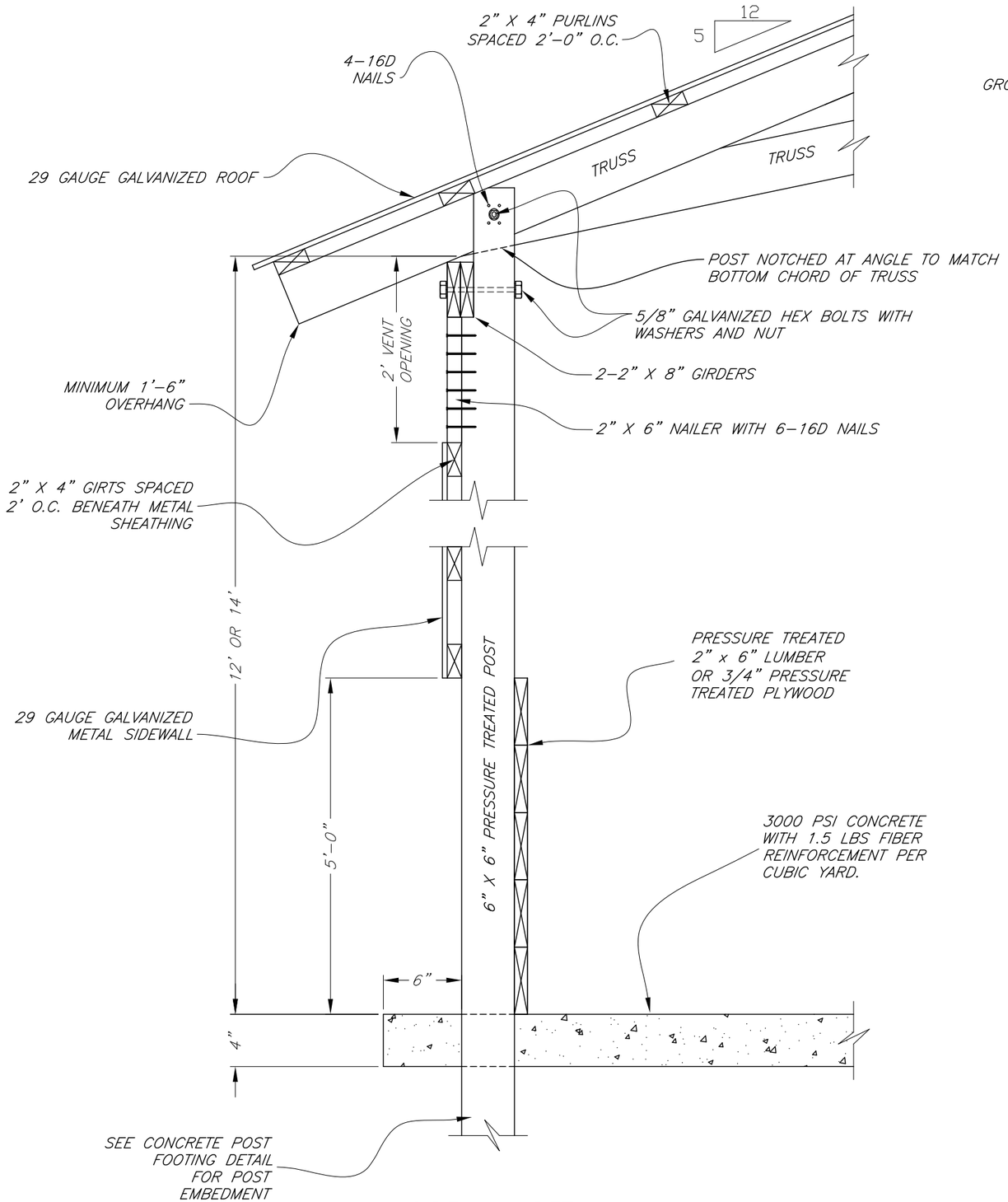

SIDEWALL DETAIL
Not to scale

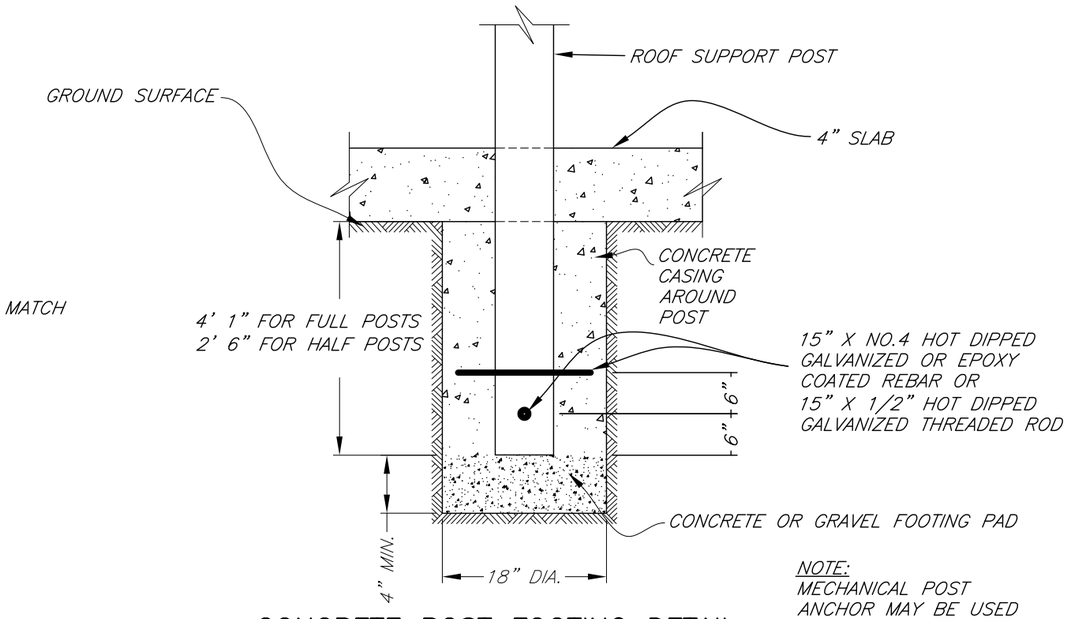

CONCRETE POST FOOTING DETAIL
Not to scale

NOTE:
MECHANICAL POST ANCHOR MAY BE USED INSTEAD OF REBAR (SEE DETAIL BELOW)

CONCRETE QUANTITY
PER POST HOLE: 0.27 C.Y. FOR FULL POSTS
0.18 C.Y. FOR HALF POSTS

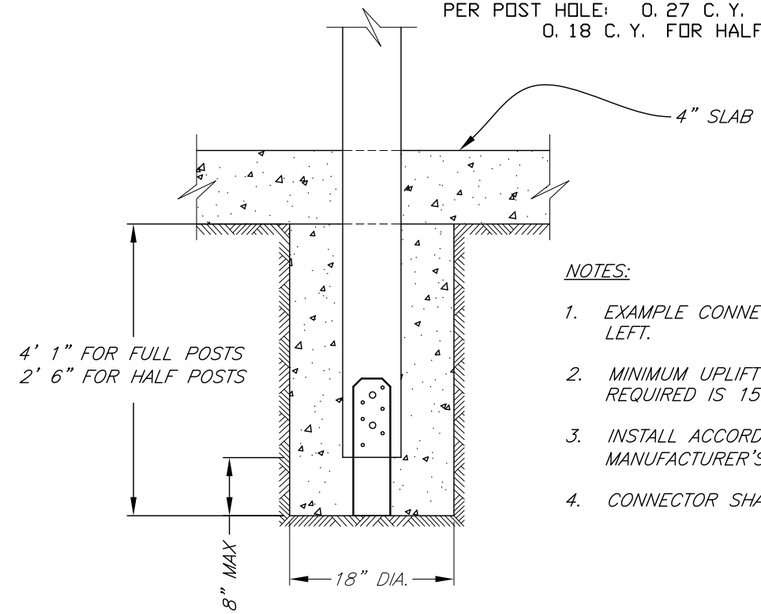

NOTES:

1. EXAMPLE CONNECTOR SHOWN AT LEFT.
2. MINIMUM UPLIFT RESISTANCE REQUIRED IS 1571 LBS.
3. INSTALL ACCORDING TO MANUFACTURER'S SPECIFICATIONS.
4. CONNECTOR SHALL BE GALVANIZED.

MECHANICAL POST ANCHOR
CONCRETE FOOTING DETAIL
Not to scale

REVISIONS		
DATE	APPROVED	TITLE
09/05	H. McFarland	State Engineer
01/06	H. McFarland	State Engineer
07/07	H. McFarland	State Engineer

		Date
Designed	W. Brown	07/07
Drawn	D. Drewry, S. Rogers	07/07
Checked	H. McFarland, J. Holloway	07/07
Approved	H. McFarland	07/07

GEORGIA POULTRY LITTER
DRY STACK FACILITY
(12' or 14' wall 6"x6" Posts Spaced 8'o.c.)
_____ County, GA

NRCS
Natural Resources Conservation Service
United States Department of Agriculture

File No.
ga-eng-313-ps5.pdf

Drawing No.
Sidewall

8/8/11 9:30 AM

Sheet 5 of 7

NOTE: ALL BOLTS, NUTS, WASHERS, STRAPS, AND NAILS ARE GALVANIZED.

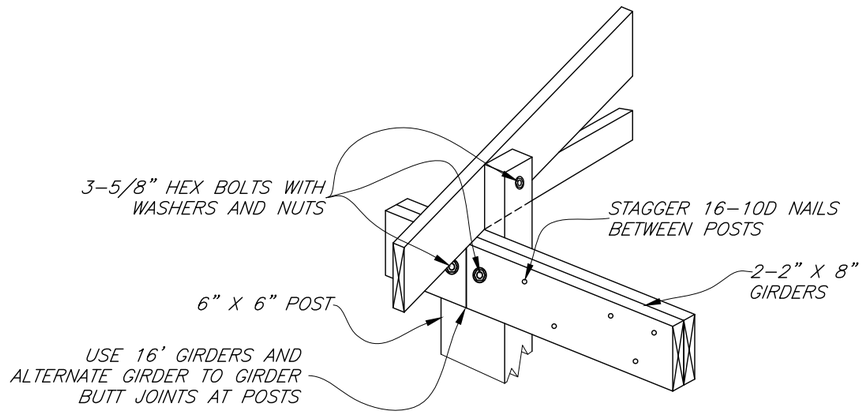

NOTES:

1. POST IS NOTCHED TO ACCOMMODATE TRUSS.
2. GIRDER TO GIRDER BUTT JOINTS REQUIRE 2–5/8" HEX BOLTS WITH WASHERS AND NUTS. (SEE ELEVATION VIEW OF ENDWALL ON SHEET 4 FOR AN EXAMPLE)

TRUSS TO GIRDER CONNECTION (WITH POST)

Not to scale

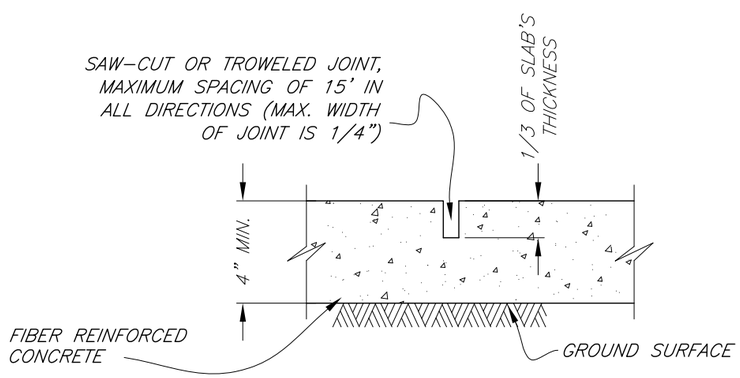

FIBER REINFORCED CONTRACTION JOINT DETAIL

Not to scale

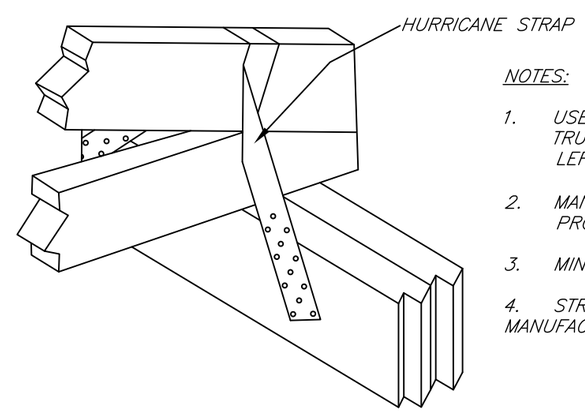

NOTES:

1. USE MANUFACTURED HURRICANE STRAPS AT TRUSS TO GIRDER CONNECTIONS AS SHOWN TOP LEFT.
2. MANUFACTURER'S SPECIFICATIONS SHALL BE PROVIDED TO NRCS.
3. MINIMUM UPLIFT RESISTANCE IS 438 LBS.
4. STRAPS MUST BE INSTALLED ACCORDING TO MANUFACTURERS SPECIFICATIONS.

TRUSS TO GIRDER CONNECTION (WITHOUT POST)

Not to scale

REVISIONS		
DATE	APPROVED	TITLE
09/05	H. McFarland	State Engineer
01/06	H. McFarland	State Engineer
07/07	H. McFarland	State Engineer

		Date
Designed	W. Brown	07/07
Drawn	D. Drewry, S. Rogers, H. McFarland	07/07
Checked	J. Holloway	07/07
Approved	H. McFarland	07/07

GEORGIA POULTRY LITTER DRY STACK FACILITY

(12' or 14' wall 6"x6" Posts Spaced 8'o.c.)

_____ County, GA

NRCS Natural Resources Conservation Service United States Department of Agriculture

File No. ga–eng–313–ps5.pdf

Drawing No. Connections

8/8/11 9:30 AM

Sheet 6 of 7

NOTE:

1. CROSS BRACING (REQUIRED BY NRCS) SHALL BE INSTALLED BETWEEN ALL ADJACENT TRUSSES.
2. THIS BRACING SHALL BE ATTACHED TO THE VERTICAL WEB AT THE CENTER OF THE TRUSS.
3. IF THERE IS NO VERTICAL WEB AT THE CENTER OF THE TRUSS THEN BLOCKING SHALL BE ADDED AS NECESSARY TO INSTALL THE BRACE.

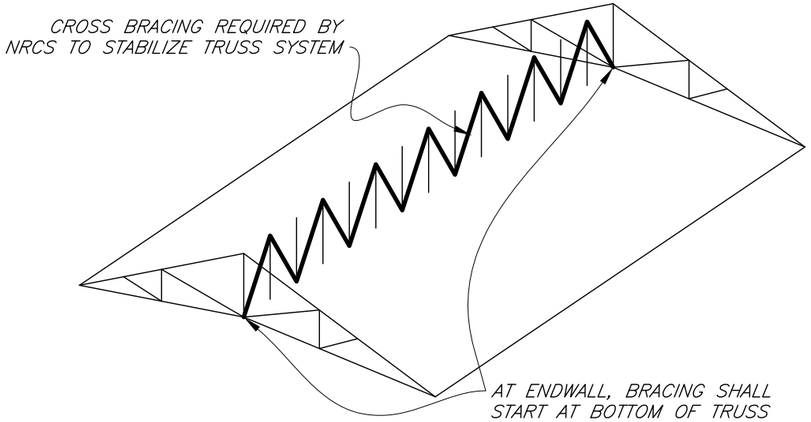

ISOMETRIC VIEW OF VERTICAL CROSS BRACING

Not to scale

GENERAL NOTES:

1. BRACING REQUIREMENTS SHOWN ON THIS PAGE ARE THE MINIMUM REQUIRED BY NRCS.
2. BRACING SHALL BE INSTALLED AS THE TRUSSES ARE ERECTED.
3. UNLESS SPECIFIED OTHERWISE, ALL BRACING SHALL CONSIST OF 2" X 4" STRESS-GRADED LUMBER CONNECTED WITH TWO 16D DEFORMED SHANK NAILS TO EACH TRUSS MEMBER THE BRACE CROSSES.
4. EXCEPT FOR TOP CHORD BRACING, ALL CONTINUOUS AND DIAGONAL BRACING SPLICES SHALL OVERLAP BETWEEN TWO TRUSSES (SEE WEB MEMBER BRACING DETAIL BELOW).
5. ADDITIONAL TEMPORARY BRACING REQUIRED BY THE CONTRACTOR DURING CONSTRUCTION SHALL BE REMOVED WHEN CONSTRUCTION IS COMPLETE.
6. CONTACT YOUR AREA ENGINEER IF YOU HAVE ANY QUESTIONS REGARDING TRUSS BRACING.

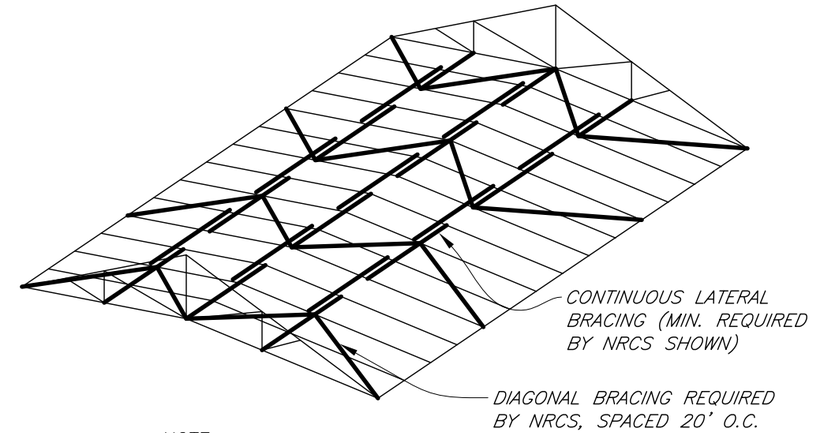

NOTE:

1. BOTTOM CHORD BRACING IS NORMALLY SPECIFIED BY THE TRUSS DESIGNER ON THE TRUSS DESIGN DRAWING. THE TRUSS DESIGN GOVERNS PLACEMENT UNLESS DESIGN REQUIRES LESS THAN THE MINIMUM BOTTOM CHORD BRACING REQUIRED BY NRCS OF THREE EQUALLY SPACED CONTINUOUS LATERAL BRACES.
2. LATERAL BRACING SHALL BE REINFORCED WITH DIAGONAL BRACING EVERY 20 FEET AS SHOWN. THIS IS AN NRCS REQUIREMENT AND WILL NOT BE SHOWN ON THE TRUSS DESIGN DRAWING.

ISOMETRIC VIEW OF BOTTOM CHORD BRACING

Not to scale

NOTE:

1. WEB MEMBER BRACING SHALL BE SPECIFIED BY THE TRUSS DESIGNER ONLY. IF TRUSS DESIGN DRAWING DOES NOT SPECIFY WEB BRACING THEN THERE IS ALSO NO DIAGONAL BRACING REQUIRED.
2. NORMALLY THIS WILL CONSIST OF CONTINUOUS LATERAL BRACES INSTALLED AT THE CENTER OF COMPRESSION WEB MEMBERS. IN SOME CASES THE BRACING MAY CONSIST OF "L" OR "T" SCAB BRACING.
3. ALL CONTINUOUS LATERAL BRACES SHALL BE REINFORCED WITH DIAGONAL BRACING EVERY 20 FEET AS SHOWN. THIS IS AN NRCS REQUIREMENT AND WILL NOT BE SHOWN ON THE TRUSS DESIGN DRAWING.

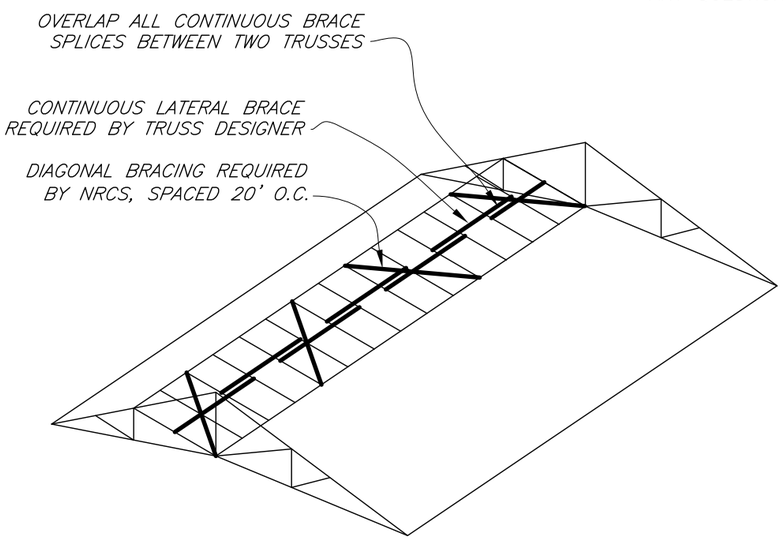

NOTE: WEB MEMBER BRACING IS SHOWN ONLY ON 1 SIDE FOR CLARITY. THIS IS AN EXAMPLE ONLY. THE TRUSS DESIGN DRAWING WILL HAVE THE ACTUAL WEB MEMBER BRACING REQUIRED.

ISOMETRIC VIEW OF WEB MEMBER BRACING

Not to scale

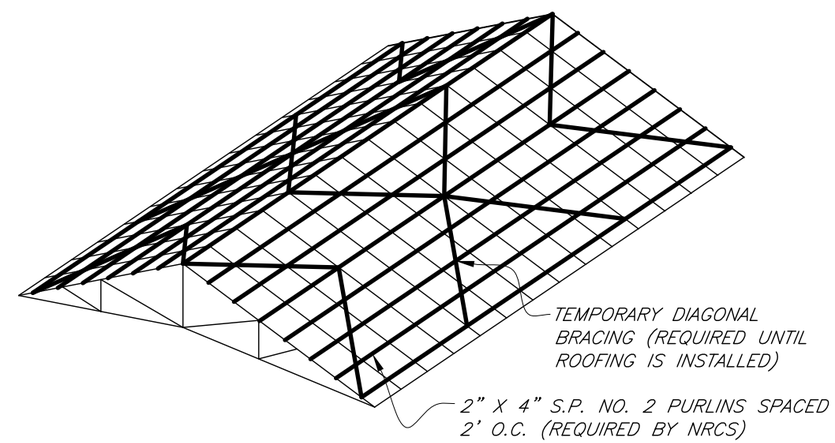

NOTE:

1. TOP CHORD BRACING SHALL CONSIST OF 2" X 4" PURLINS (SOUTHERN PINE #2 OR BETTER) SPACED 2' O.C. AS SHOWN ON SHEET 5.
2. TEMPORARY DIAGONAL BRACING SHALL ALSO BE REQUIRED IF ROOFING IS NOT INSTALLED IMMEDIATELY OVER THE PURLINS.

ISOMETRIC VIEW OF TOP CHORD BRACING

Not to scale

REVISIONS		
DATE	APPROVED	TITLE
09/05	H. McFarland	State Engineer
01/06	H. McFarland	State Engineer
07/07	H. McFarland	State Engineer

		Date
Designed	W. Brown	07/07
Drawn	D. Drewry, S. Rogers, H. McFarland	07/07
Checked	J. Holloway	07/07
Approved	H. McFarland	07/07

GEORGIA POULTRY LITTER DRY STACK FACILITY

(12' or 14' wall 6"x6" Posts Spaced 8'o.c.)

_____ County, GA

NRCS Natural Resources Conservation Service United States Department of Agriculture

File No. ga-eng-313-ps5.pdf

Drawing No. Bracing

8/8/11 9:30 AM

Sheet 7 of 7