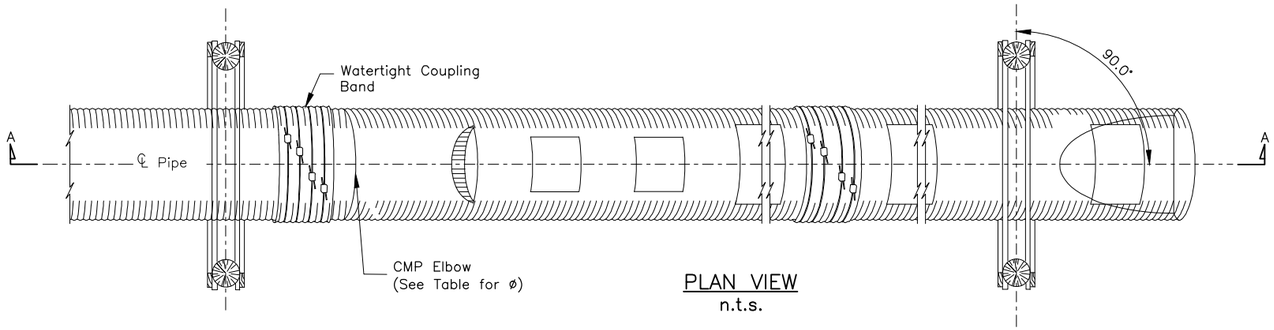

PLAN VIEW
n.t.s.

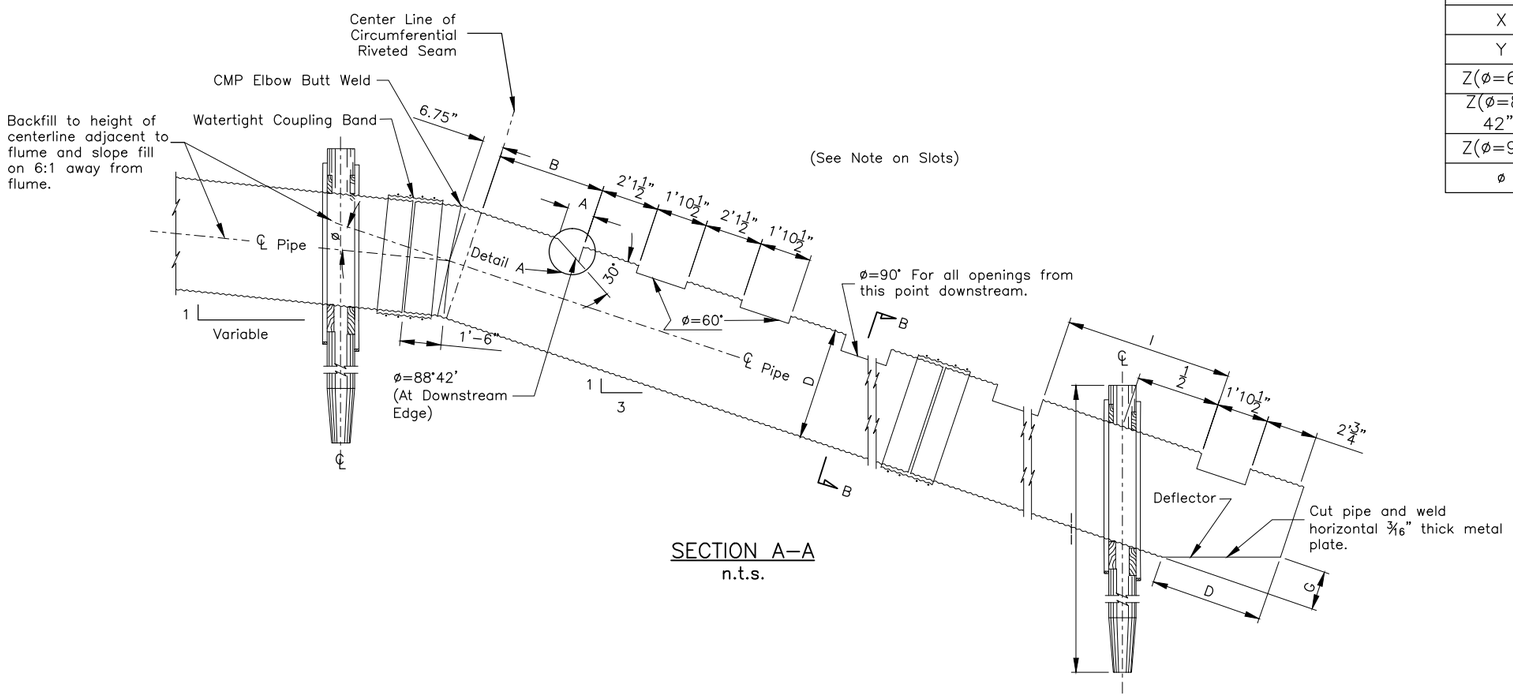

SECTION A–A
n.t.s.

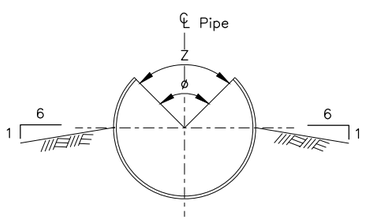

SECTION B–B
n.t.s.

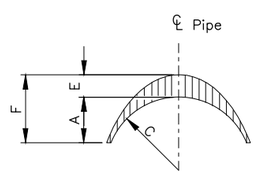

SECTION C–C
n.t.s.

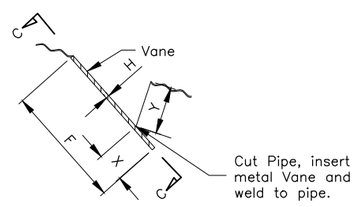

DETAIL A
n.t.s.

SLOTTED FLUME DIMENSIONS (ft.–in.)								
Pipe Dia.	15"	18"	21"	24"	30"	36"	42"	48"
A	0–3 ¾	0–4 ½	0–5 ¼	0–6	0–7 ½	0–9	0–10 ½	1–0
B	1–11 ¼	1–11 ¼	1–11 ¼	1–11 ¼	3–11 ¼	3–11 ¼	3–11 ¼	3–11 ¼
C	0–6	0–7 ¼	0–8 ⅜	0–9 ⅝	1–0	1–2 ⅜	1–4 ¾	1–7 ¼
D	1–3	1–6	1–9	2–0	2–6	3–0	3–6	4–0
E	0–1 ⅞	0–2 ¼	0–2 ⅝	0–3	0–3 ¾	0–4 ½	0–5 ¼	0–6
F	0–5 ⅝	0–6 ¾	0–7 ⅞	0–9	0–11 ¼	1–1 ½	1–3 ¾	1–6
G	0–5	0–6	0–7	0–8	0–10	1–0	1–2	1–4
H	0–0 ⅛	0–0 ⅛	0–0 ⅛	0–0 ⅛	0–0 ⅛	0–0 ⅛	0–0 3/16	0–0 3/16
I	2–1 ½	2–1 ½	2–1 ½	2–1 ½	2–1 ½	2–1 ½	6–1 ½	6–1 ½
X	0–1 ¼	0–1 ½	0–1 ¾	0–2 ⅛	0–2 ⅝	0–3 ⅛	0–3 ⅝	0–4 ⅛
Y	0–2 ⅛	0–2 ⅝	0–3	0–3 ½	0–4 ⅜	0–5 ¼	0–6	0–6 ⅞
Z(ø=60°)	0–7 ⅞	0–9 ⅜	0–11	1–0 ⅝	1–3 ¾	1–6 ⅞	1–10	2–1 ⅛
Z(ø=88° 42")	0–11 ⅝	1–1 ⅞	1–4 ¼	1–6 ⅝	1–11 ¼	2–3 ⅞	2–8 ½	3–1 ⅛
Z(ø=90°)	0–11 ¾	1–2 ⅛	1–4 ½	1–6 ⅞	1–11 ⅝	2–4 ¼	2–9	3–1 ¾
ø 1/								

ø – Must be completed and entered into table.

Notes:
Corrugated metal pipe shall be Type 1, Shape 1 conforming to Construction Specification 51. Corrugated metal pipe, NRCS National Engineering Handbook, Part 642, Specifications for Construction Contracts. Fabricated metal plates shall be compatible material.
All coupling bands upstream of the elbow shall be watertight and shall be 2 feet wide annular corrugated bands with 12 inch wide neoprene gasket and four rods and tank lugs.
Neoprene gaskets shall be 3/8" thick, have an unstretched diameter 10 percent less than the nominal pipe size and shall comply with ASTM D–1056, Grade SCE–43.
All slots shall be spaced similarly downstream with ends of pipe sections fabricated as shown. All slots shall measure 1'–10 1/2" longitudinally along the pipe. Where riveted pipe is used, cut from the single thickness leaving the the slots shall be lapped area undisturbed.

Standardized Design:
Adapted from "Tests of a Slotted–Flume Outlet" by Phillips and Jacobson, Transations of the ASAE, vol. 9, no. 3, pp. 433 thru 436, 1966, and standard drawings by NRCS, Des Moines, Iowa. Revision of Std. Drawing SNTC–11 dated 12–86. Must be adapted to specific site. Refer to instructions for use and design assumptions. A folder containing design notes and computations is available at NRCS, P.O. Box 141510 Gainesville, Fl 32614–1510

Instructions for Use:
Applications should be restricted to the range of model studies performed by the Institute of Hydraulic Research, State University of Iowa, as discussed in the Transactions of the ASAE paper, "Tests of a Slotted–Flume Outlet", by Phillips and Jacobson, 1966.
Lengths of piling must be determined based on site conditions and construction methods.
Sites with unstable outlets should be closely monitored to avoid loss of earth support to the CMP upstream of the Outlet Support.

Design Assumptions:
Maximum discharge is based on 25 feet of head acting on 100 feet of CMP.
Total loading for Outlet Support is based on 12 linear feet of CMP and water from maximum discharge above including impact force on deflector. Loadings used were 965, 1425, 1875, 2550, 4190, 6260, 9220, and 13210 lbs. for 15 through 48 inch pipes respectively.

Slotted Flume Outlet

Standard DWG. No. FL–410A1.dwg

Date 3/16/2011 | Sheet 1 of 2

Revisions		
Date	Approved	Title
07/11	JT Wilson	ST Con Eng

Date
Designed
Drawn
Checked
Approved

Slotted Flume Outlet

NRCS
Natural Resources Conservation Service
United States Department of Agriculture

File No.
FL–410A1.dwg

Drawing No.

3/16/2011

Sheet of