Note: Fill all blocks with concrete and trowel finish top to a smooth surface

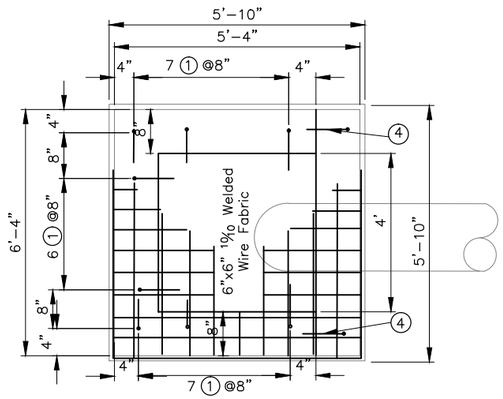


PLAN
n.t.s.

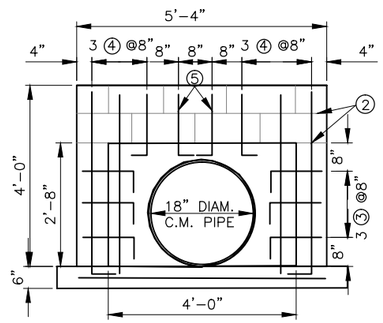


BACK WALL
n.t.s.

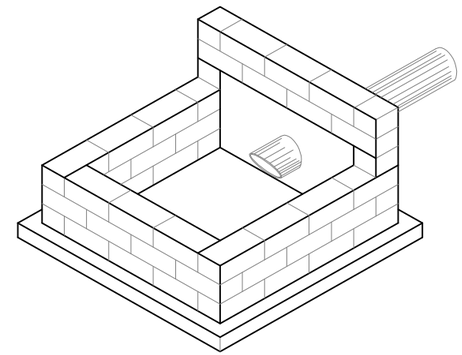

ISOMETRIC VIEW OF INLET BOX
n.t.s.

STEEL SCHEDULE

FOR TYPICAL BAR TYPES REFER TO A.C.I. STANDARD 315 – 65

| LOCATION | MARK | SIZE | QUAN. | LENGTH | TYPE | A | B | TOTAL FT. |
|---|---|---|---|---|---|---|---|---|
| FLOOR SIDE WALLS | 1 | 3 | 20 | 2'–6" | 2 | 0–6 | 2–0 | 50'–0" |
| FLOOR SIDE & BACK WALLS | 2 | MASONRY JOINT REINFORCEMENT | | | | | | |
| BACK WALLS | 3 | 3 | 6 | 1'–9" | 2 | 0–6 | 1–3 | 10'–6" |
| BACK WALLS | 4 | 3 | 6 | 4'–6" | 2 | 0–6 | 4–0 | 27'–0" |
| BACK WALLS | 5 | 3 | 2 | 2'–0" | 2 | 0–3 | 1–9 | 4'–0" |

NOTE: Mark No. 2 shall be Masonry Joint Reinforcement. Joint Reinforcement shall be fabricated from steel wire conforming to ASTM A82. Longitudinal wires may be smooth or deformed and shall be no lighter than 0.1486 inches in nominal diameter (9 gauge). Cross wires shall be no lighter than 0.1055 inches in nominal diameter (12 gauge).

LIST OF MATERIALS FOR BOX INLET

1. Class 3000m concrete 1.39 cu. yds.
2. 5'–4" x 5'–4" – 6x6 1%o welded wire fabric 27.6 sq. ft., 5.8 lbs.
3. Reinforcing steel #5 bars 91.5 lin. ft. 34.4 lbs.
4. Masonry joint reinforcement 40 lin. ft.
5. Concrete block, 8"x8"x16"= 39
6. Concrete block, 8"x8"x8"= 6

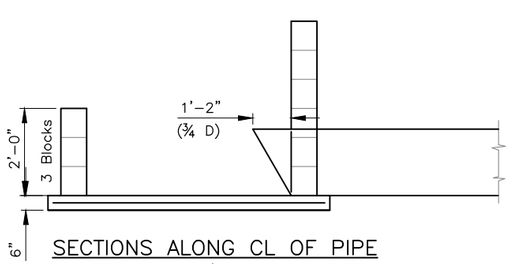


SECTIONS ALONG CL OF PIPE
n.t.s.

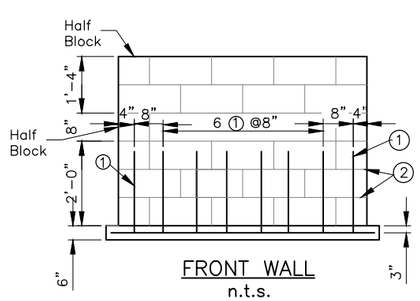


FRONT WALL
n.t.s.

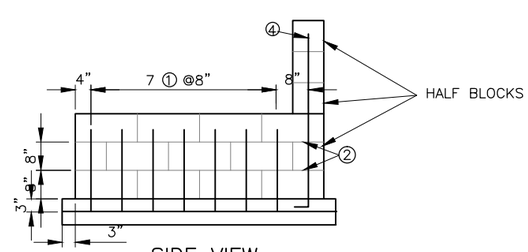


SIDE VIEW
n.t.s.

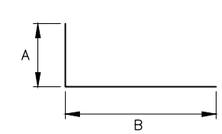


BAR TYPE
n.t.s.

Concrete Block Box – Hooded Inlet for 18" Dia. Pipe

Standard DWG. No. FL–410E1.dwg

Date 3/15/2011 | Sheet 1 of 6

| Revisions | | |
|---|---|---|
| Date | Approved | Title |
| 07/11 | JT Wilson | ST Con Eng |

Date

Designed

Drawn

Checked

Approved

Concrete Block Box – Hooded Inlet for 18" Dia. Pipe

NRCS Natural Resources Conservation Service United States Department of Agriculture

File No. FL–410E1.dwg

Drawing No.

3/15/2011

Sheet __of __