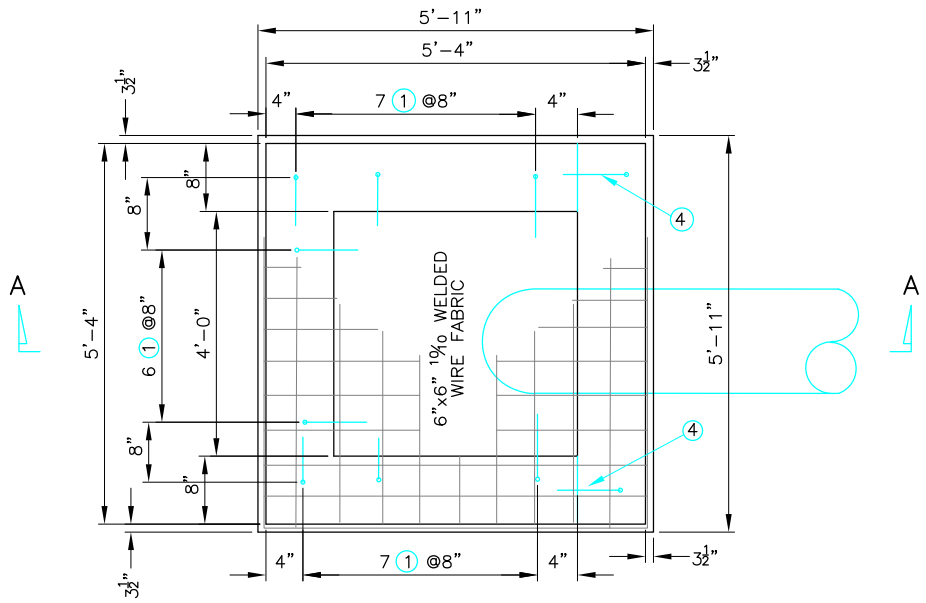

PLAN
n.t.s.

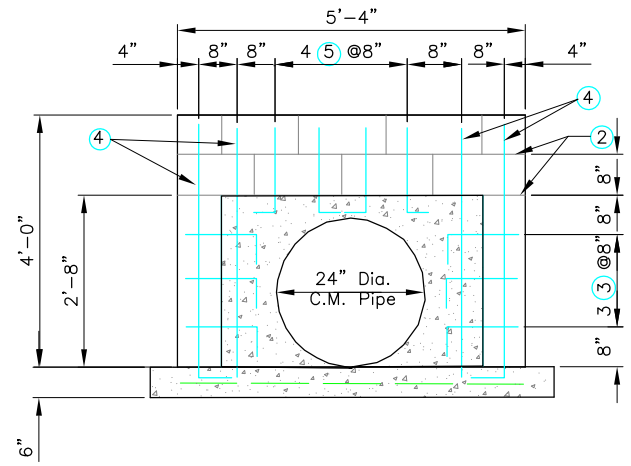

BACK WALL
n.t.s.

NOTE: Fill all blocks with concrete and trowel finish top to smooth surface

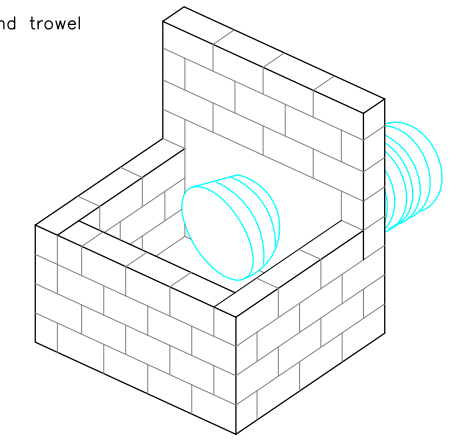

ISOMETRIC VIEW OF INLET BOX AND PIPE
n.t.s.

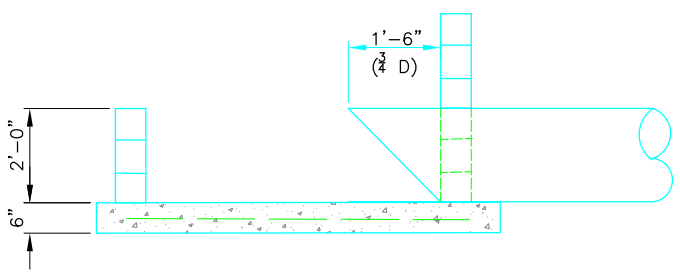

SECTION A–A
n.t.s.

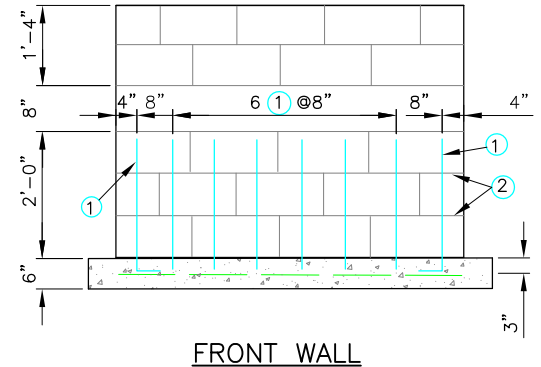

FRONT WALL
n.t.s.

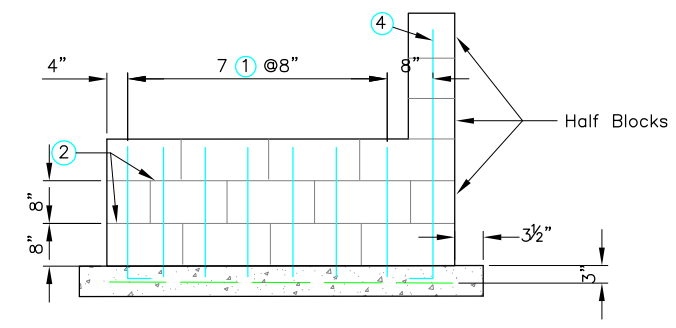

SIDE WALL
n.t.s.

STEEL SCHEDULE

For Typical Bar Types Refer To ACI Standard 315–65

LOCATION	MARK	SIZE	QUAN.	LENGTH	TYPE	A	B	TOTAL FT.
Front and Side Walls	1	3	20	2'–6"	2	6"	2'–0"	50'–0"
Front, Side, and Back Walls	2	Masonry Joint Reinforcement						
Back Wall	3	3	6	1'–9"	2	6"	1'–3'	10'–6"
	4	3	4	4'–6"	2	6"	4'–0"	18'–0"
	5	3	4	1'–9"	2	3"	1'–6"	7'–0"

Bar Type

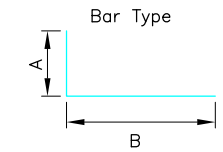

NOTE: Mark No. 2 Shall Be Masonry Joint Reinforcement. Joint reinforcement shall be fabricated from steel wire conforming to ASTM A82. Longitudinal wires may be smooth or deformed and shall not be less than 0.1483 in. in nominal diameter (9 gauge). Cross wires shall not be less than 0.1055 in. in nominal diameter (12 gauge).

LIST OF MATERIAL FOR BOX INLET
Class 3000M Concrete 1.37 Cu. Yds.
5'–6"x5'–6" 6x6 19/0 Welded Wire Fabric 30.25 Sq. Ft. 6.4 lbs
Reinforcing Steel #3 Bars 85.5 Lin. Ft. 32.1 lbs
Masonry Joint Reinforcement 40 Lin. Ft.
Concrete Block 8"x8"x16" = 39
Concrete Block 8"x8"x8" = 6

Concrete Block Box Hooded Inlet
24" Diameter Pipe

Standard DWG. No. FL–410E2.dwg

Date 7/26/2011 | Sheet 2 of 6

Revisions		
Date	Approved	Title
07/11	JT Wilson	SI Con Eng

Date
Designed
Drawn
Checked
Approved

Concrete Block Box Hooded Inlet
24" Diameter Pipe

NRCS
Natural Resources Conservation Service
United States Department of Agriculture

File No.
FL–410E2.dwg

Drawing No.

Sheet of