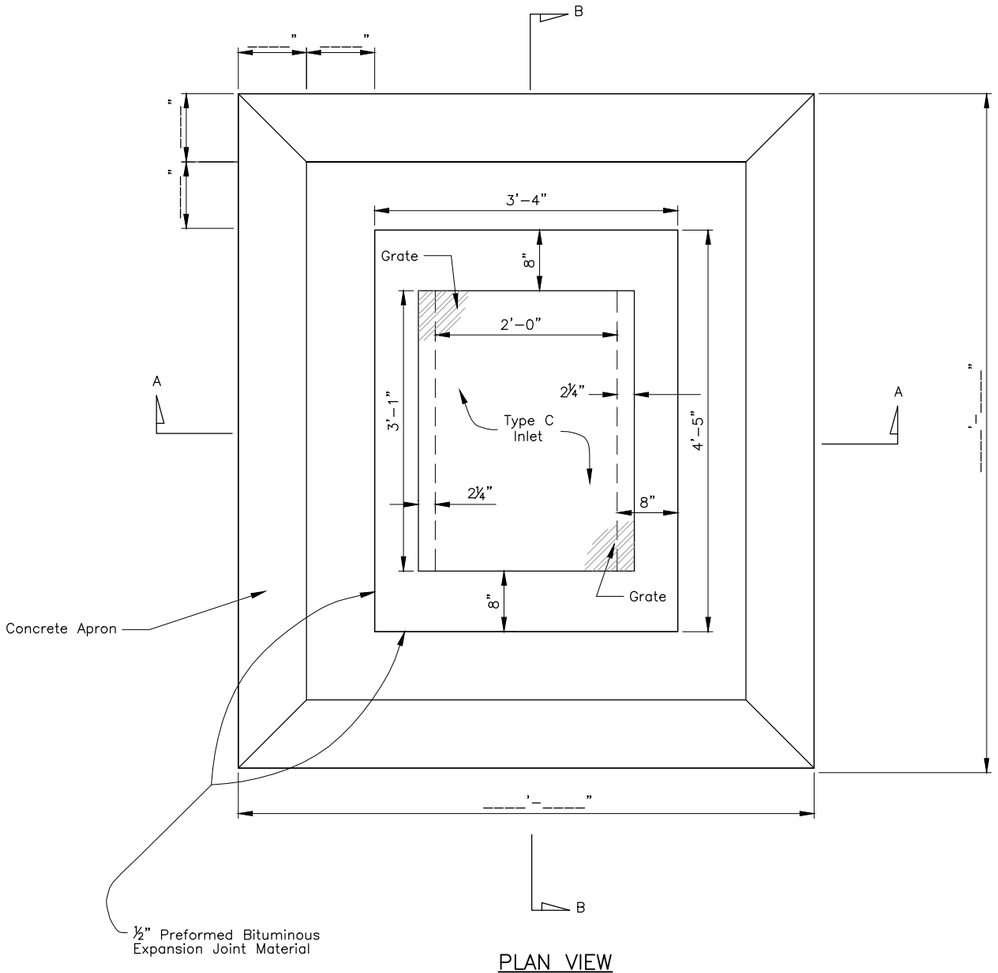

PLAN VIEW
n.t.s.

NOTES:

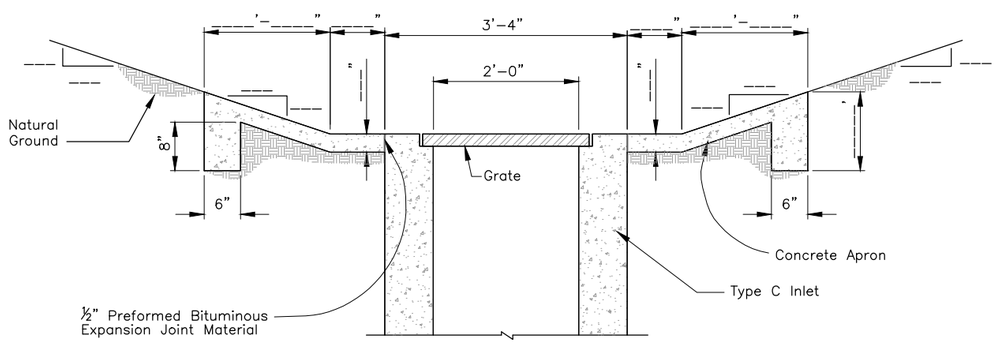

SECTION A–A
n.t.s.

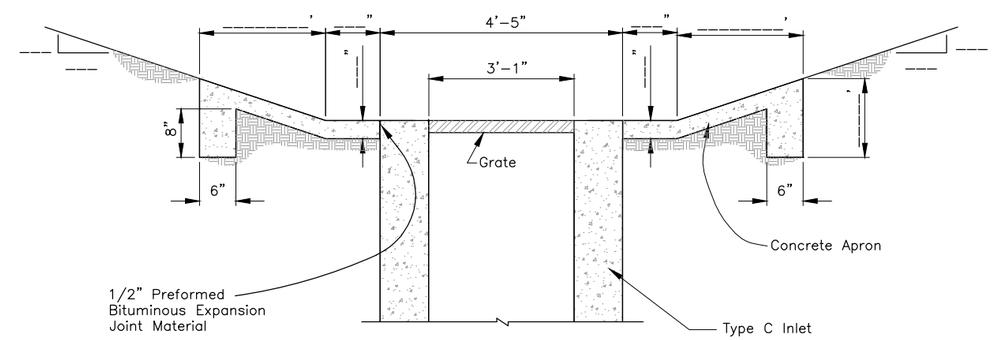

SECTION B–B
n.t.s.

Concrete Apron For Type C Inlet
(No Slots)

Standard DWG. No. FL–410H2.dwg

Date 5/19/2010 | Sheet 2 of 2

Revisions		
Date	Approved	Title
03/11	J.T. Wilson	St. Con. ENG

Designed
Drawn
Checked
Approved
Date

Concrete Apron For Type C Inlet
(No Slots)

NRCS
Natural Resources Conservation Service
United States Department of Agriculture

File No.
FL–410H2.dwg

Drawing No.

5/19/2010
Sheet 2 of 2