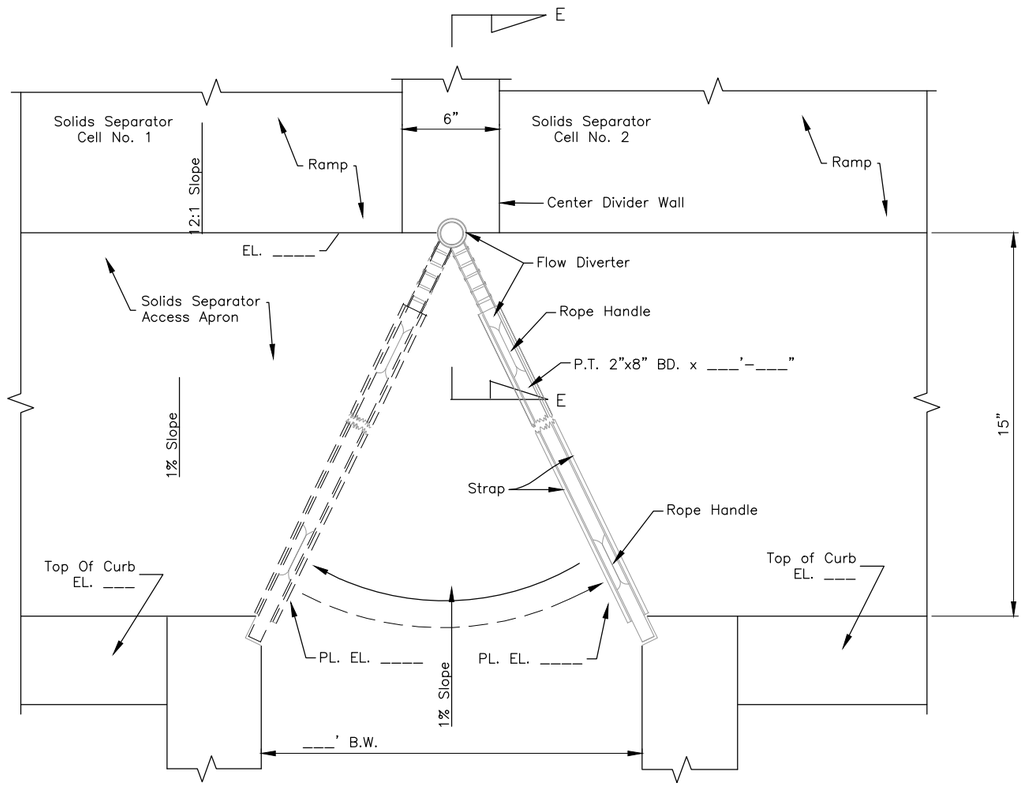

FLOW DIVERTER PLAN VIEW
n.t.s.

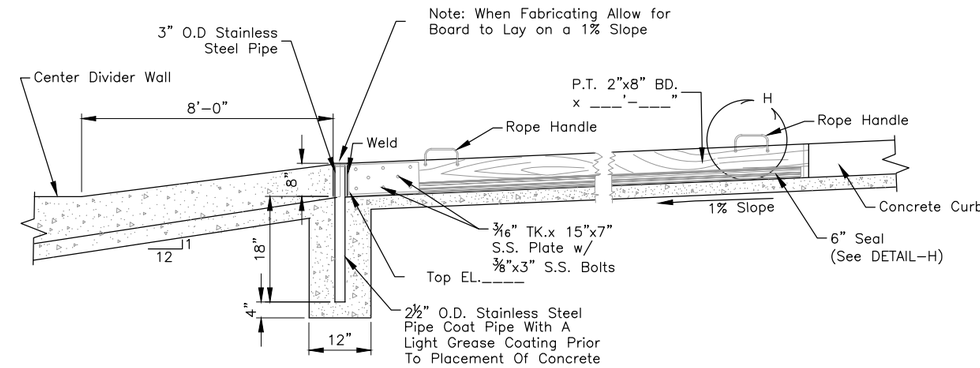

FLOW DIVERTER SECTION VIEW
n.t.s.

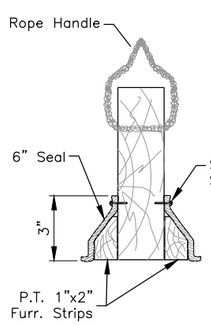

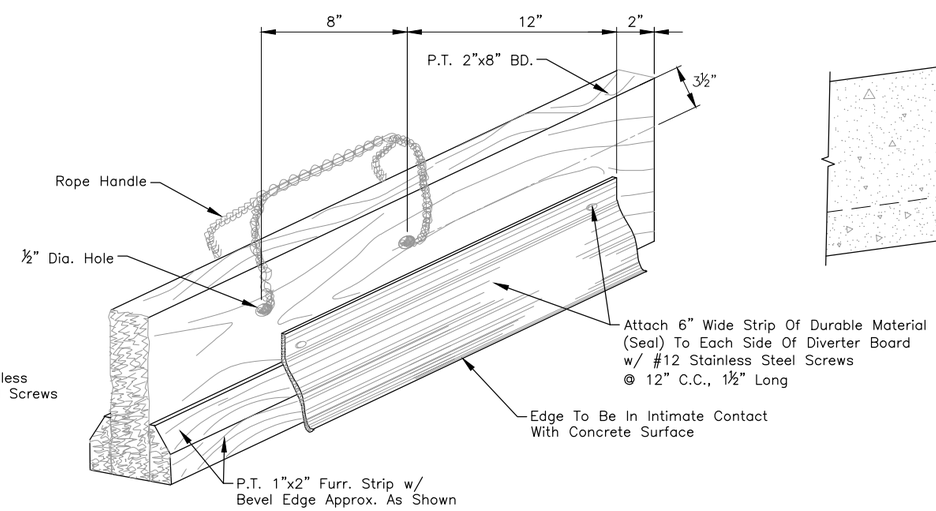

DETAIL-H
n.t.s.

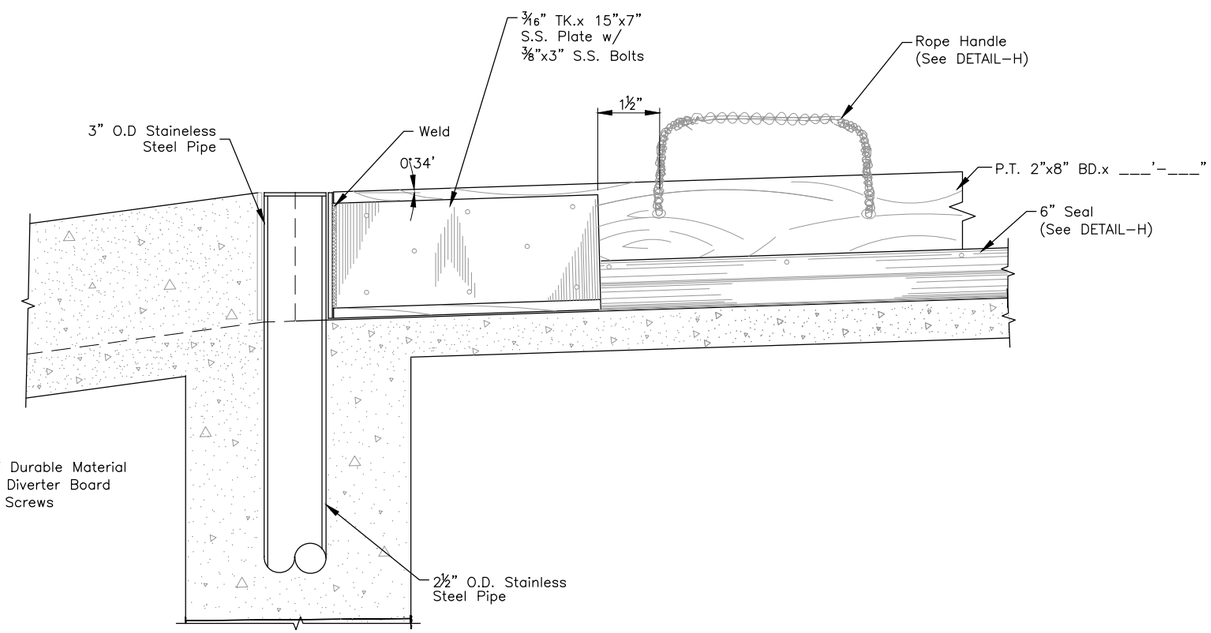

SECTION E-E
n.t.s.

Manure Solids Separator
w/ Lined Waterway Inlet-
Inlet Details

Standard DWG. No. FL-632A4

Date 7/26/2011 | Sheet 4 of 4

Revisions		
Date	Approved	Title
07/11	JT Wilson	ST Con Eng

Date
Designed
Drawn
Checked
Approved

Manure Solids Separator
w/ Lined Waterway Inlet- Inlet Details

NRCS
Natural Resources Conservation Service
United States Department of Agriculture

File No.
FL-632A4.dwg

Drawing No.

7/26/2011

Sheet__of__