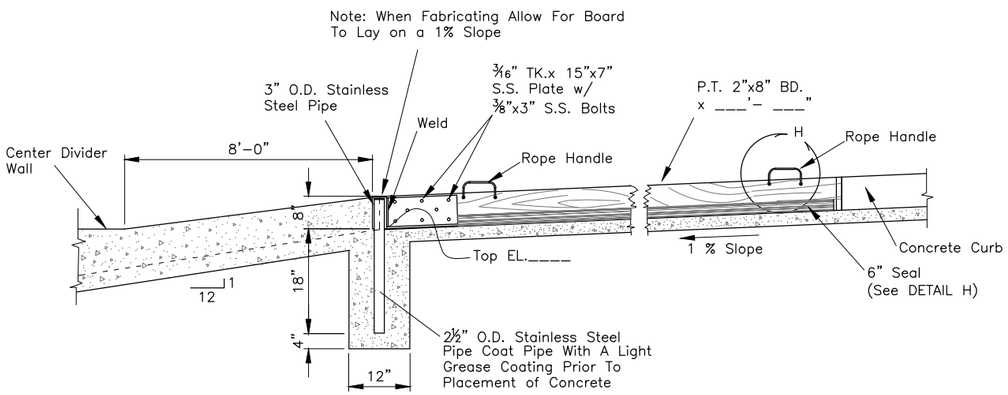

FLOW DIVERTER SECTION VIEW
n.t.s.

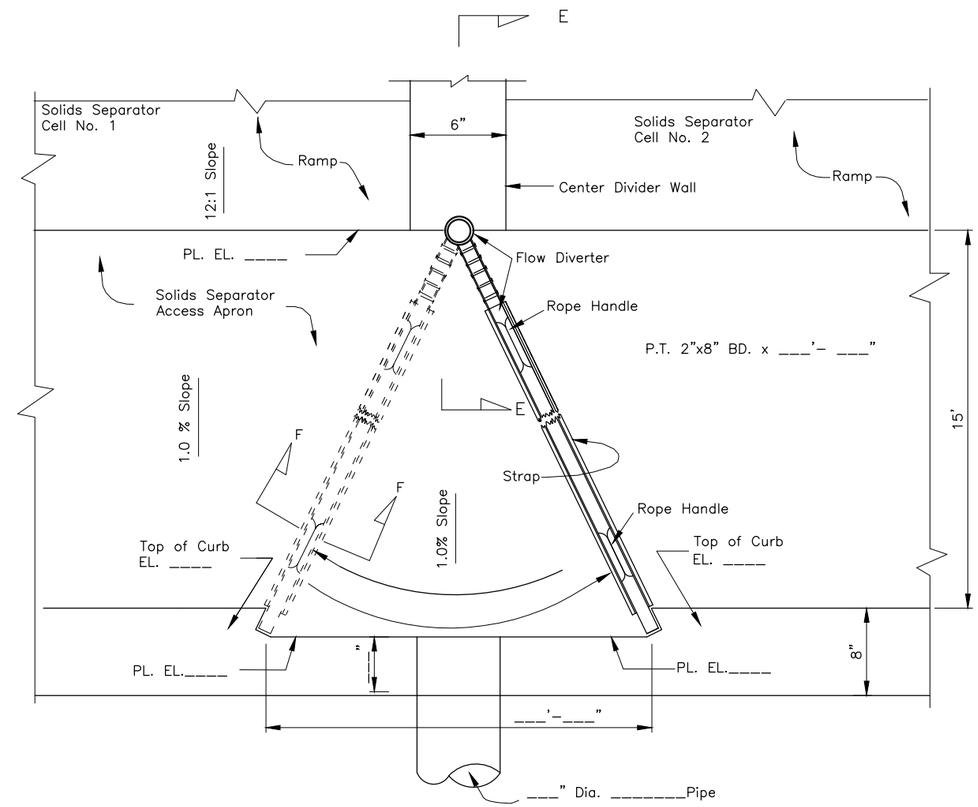

FLOW DIVERTER PLAN VIEW
n.t.s.

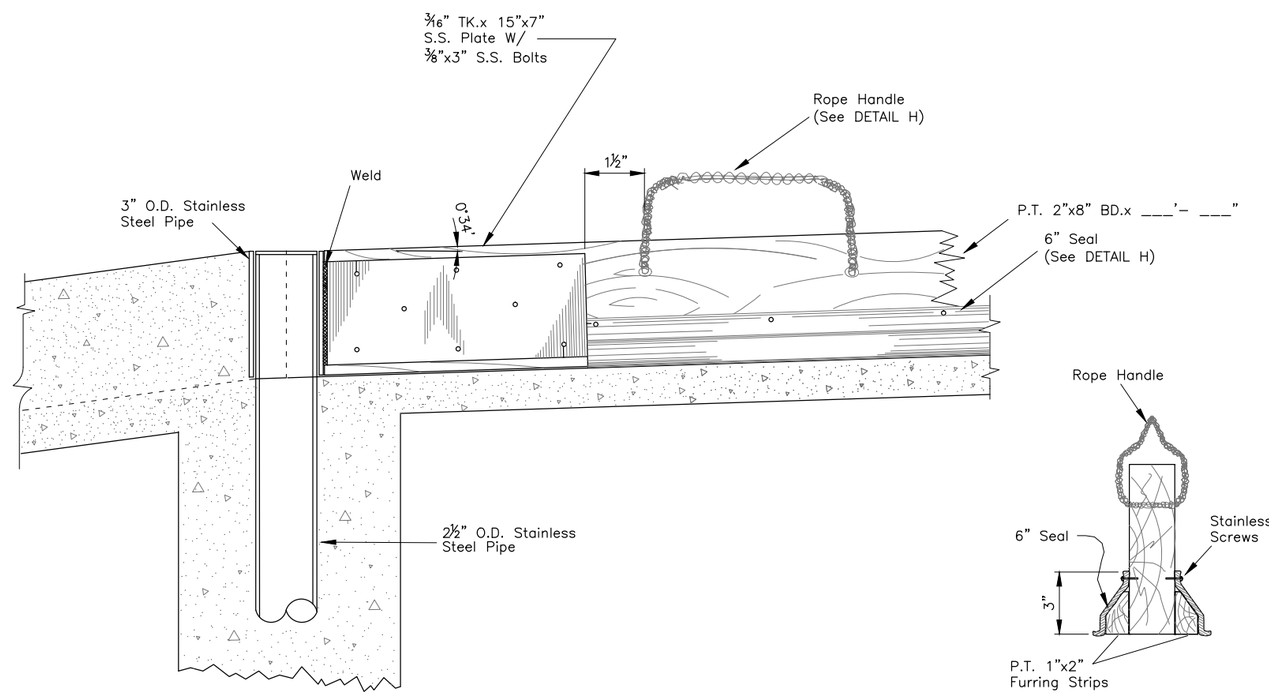

SECTION E–E
n.t.s.

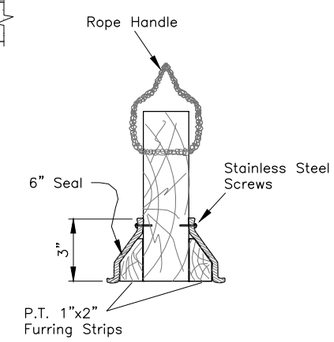

SECTION F–F
n.t.s.

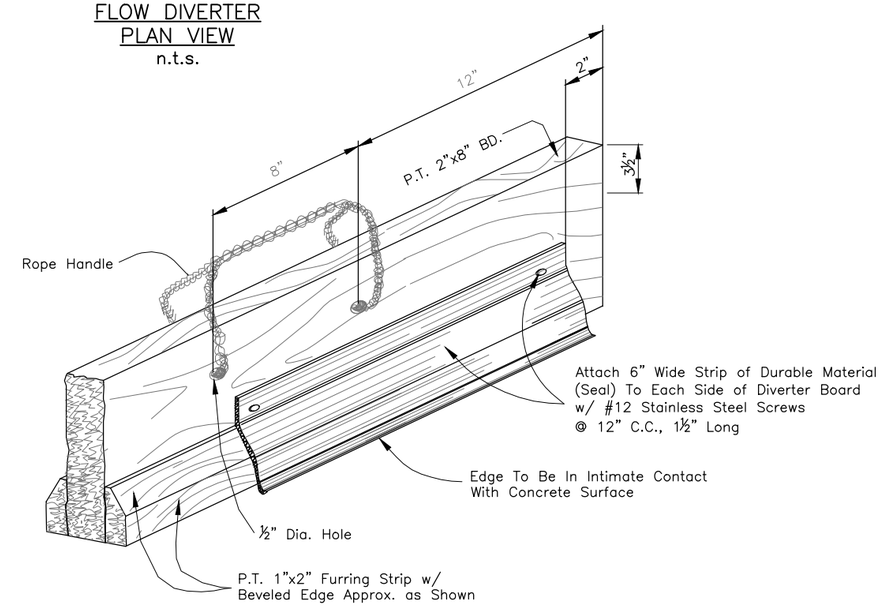

DETAIL H
n.t.s.

Manure Solids Separator With Pipe Inlet Details

Standard DWG. No. FL–632B4

Date 7/26/2011 | Sheet 4 of 4

Revisions		
Date	Approved	Title
07/11	JT Wilson	ST Con Eng

Date
Designed
Drawn
Checked
Approved

Manure Solids Separator With Pipe Inlet Details

NRCS
Natural Resources Conservation Service
United States Department of Agriculture

File No. FL–632B Series.dwg

Drawing No.

7/26/2011

Sheet__of__