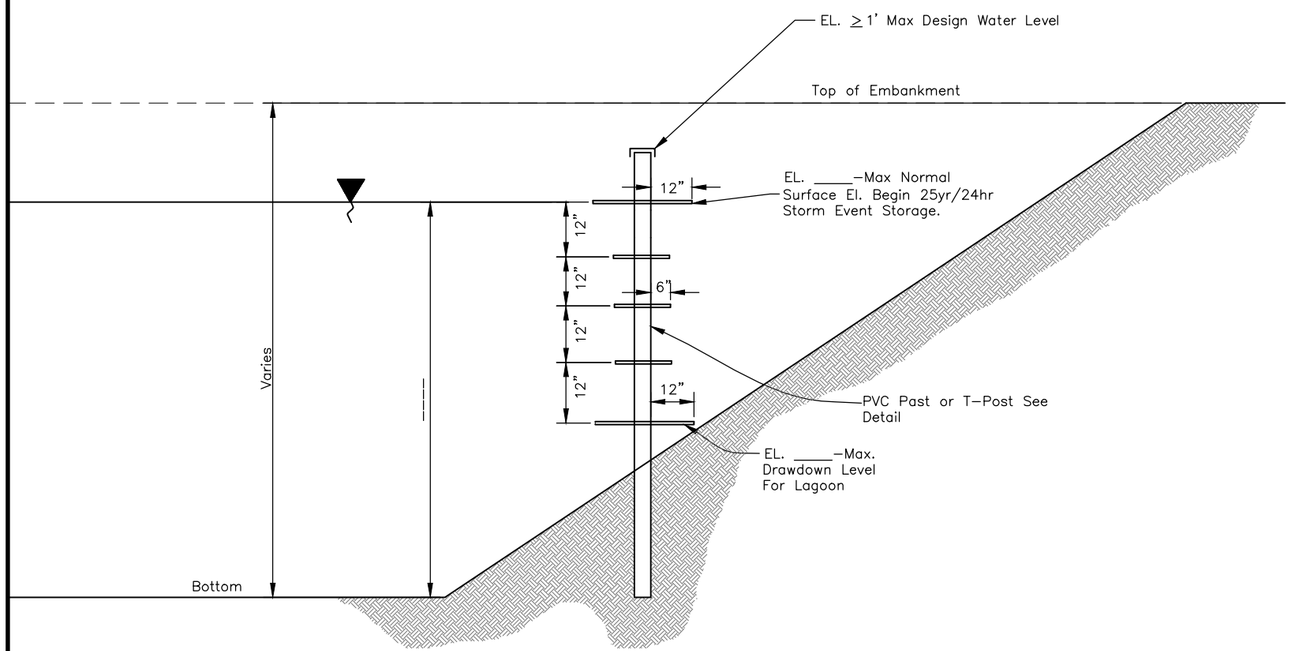

SECTION
n.t.s

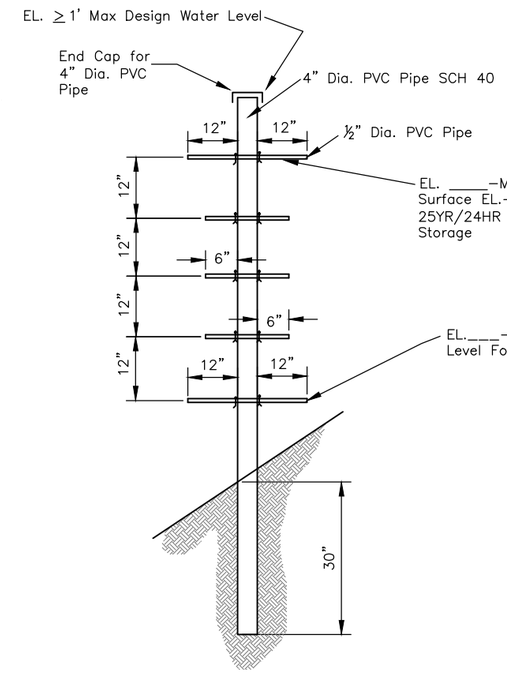

DETAIL – STAFF GAUGE PVC POST
n.t.s

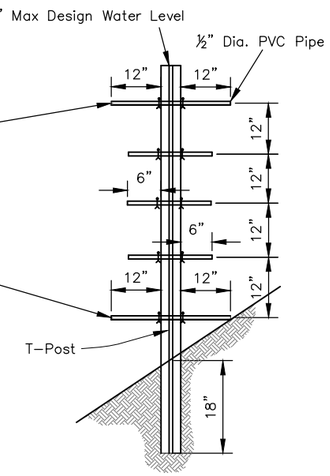

DETAIL – STAFF GAUGE
T – POST
n.t.s

MARKER (from top)	ELEVATION
1	
2	
3	
4	
5	
6	
7	
8	
9	
10	

Notes:
1. Elevation markers shall be ½" diam. installed at max. normal surface level for Waste Storage Pond and Waste Treatment Lagoon and max. drawdown level for Waste Treatment Lagoon. In addition markers will be placed at 12" intervals with elevations designated in the table to the right.
2. Use only in earth or clay lined Waste Storage Pond Lagoon.

Staff Guage Details

Standard DWG. No. FL–800A2.dwg

Date 7/26/2011 | Sheet 2 of 2

Revisions		
Date	Approved	Title
07/11	JT Wilson	ST Con Eng

Date
Designed
Drawn
Checked
Approved

Staff Guage Details
T and PVC Post

NRCS
Natural Resources Conservation Service
United States Department of Agriculture

File No.
FL–800A2.dwg

Drawing No.

7/26/2011

Sheet of