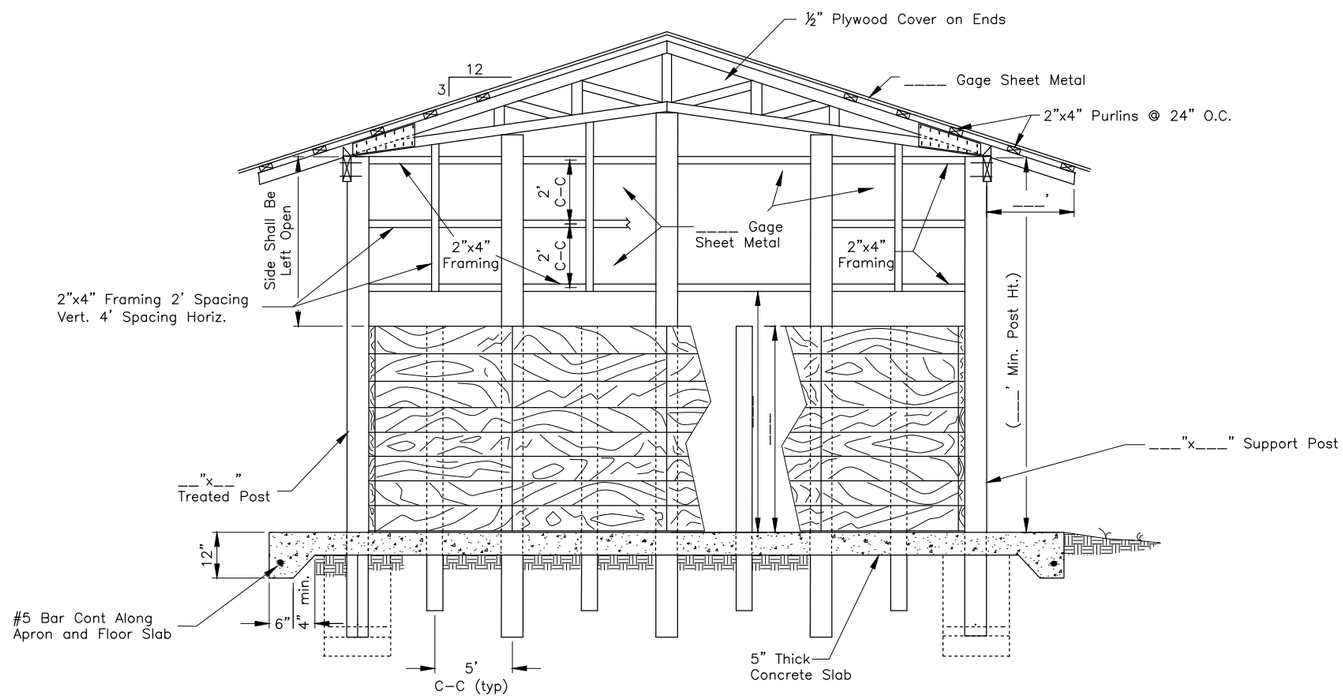

SECTION A–A
n.t.s.

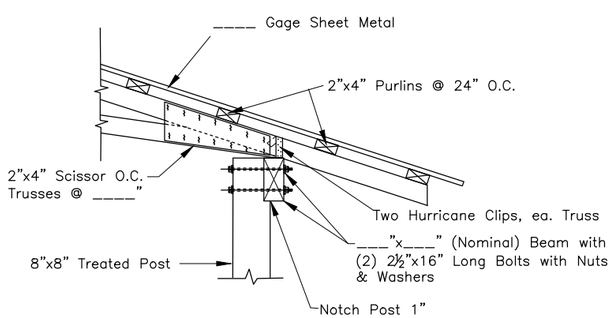

BEAM & TRUSS CONNECTION DETAIL
n.t.s.

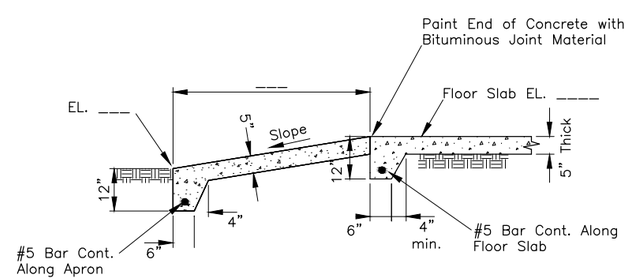

SECTION B–B
n.t.s.

CONSTRUCTION NOTES:

1. The construction site shall be cleared of all trees, roots, sod, brush, rocks and debris. All material not suitable for subgrade shall be removed from foundation areas and replaced with compacted earthfill.
2. The structure shall be constructed to the lines and grades as shown on the drawings and/or as staked in the field by NRCS personnel.
3. The compacted base shall extend a minimum distance of one foot beyond the outer edge of the concrete. It is to be placed prior to the installation of posts.
4. The compacted base shall consist of SC material. Fill material shall be placed in four inch lifts and compacted by at least two passes of the equipment over the entire surface. The moisture content of the base material and fill material shall be sufficient to obtain the necessary bonding and application.
5. The finished floor elevation shall be a minimum of two feet above the normal high water table and a minimum of six inches above natural ground.
6. There shall be positive drainage away from the building.
7. All lumber and posts shall be Southern Pine No. 2 at 19% moisture content or better.
8. All lumber (except for roof purlins) shall be preservative pressure treated (P.P.T.) with 0.6 pounds (min.) per cubic foot of alkaline copper quaternary (ACQ) on posts placed into the ground. Planking shall have 0.4 pounds (min.) per cubic foot of ACQ. All lumber, support post and planking pressure treatment shall conform to ASTM D1760–96.
9. All nails used for lumber shall be galvanized zinc ring shank or spiral shank. Nails used to attach roofing material to the purlin shall be lead–headed, aluminum nails with neoprene washers, or other type approved by the approving engineer.
10. All nuts, bolts, washers, hinges and framing anchors shall be galvanized.
11. All concrete shall be 4000 psi and shall be in conformance with NRCS Construction Specifications– Concrete for Minor Structures. Cement shall be Type II of IIA conforming to ASTM C150. 12 Reinforcing steel (rebars) shall be of the size shown and shall be placed according to the construction drawings, securely tied and be supported in accordance with specifications.
12. Unless otherwise shown on drawing, concrete slabs shall be reinforced with 6x6x10/10 welded wire mesh (WWM) or fiber reinforced concrete (FRC). See construction specification for requirements of reinforcement.
13. Expansion joints shall be located as shown on the drawings and as staked in the field by the engineer.
14. Control joint locations shall be approved by the NRCS representative and shall be no more then 20' on center for concrete with WWM and shall be no more than 15' on center for Fiber Reinforced Concrete.
15. Truss and anchors shall be designed to meet all state and local laws and regulations. The truss design shall be approved by a Florida Licensed Professional Engineer. The truss shall be designed for a PSF live load plus a 3.5 PSF dead load. A copy of the approved (FLPE) truss design shall be submitted to NRCS prior to installation.
16. A protective cover of vegetation shall be established on all disturbed areas. See NRCS Critical Area Planting vegetation specification for requirements.
17. Metal, plastic, wood or broiler house fabric may be used as siding to prevent blowing rain from entering the facility. On the end walls (gable ends) the siding may extend the full length of the wall. On the side walls, a minimum of 30% cover of the wall shall be left open (uncovered).
18. See attached Construction Specifications for additional construction requirements.
19. All permits (local, county, and state) must be secured by the owner/operator prior to beginning construction.

Waste Storage Facility
Section and Details

Standard DWG. No. FL–313F2.dwg

Date 7/26/2011 | Sheet 2 of 2

Revisions		
Date	Approved	Title
07/11	JT Wilson	ST Con Eng

Date
Designed
Drawn
Checked
Approved

Waste Storage Facility
Section and Details

NRCS
Natural Resources Conservation Service
United States Department of Agriculture

File No.
FL–313F2.dwg

Drawing No.

7/26/2011

Sheet of