NATURAL RESOURCES CONSERVATION SERVICE
MONTANA CONSERVATION PRACTICE SPECIFICATION

FENCE (FEET)

CODE 382

WOVEN WIRE/NET WIRE AND CHAIN LINK

SCOPE

The work shall consist of furnishing and installing permanent woven wire or chain link fences to control access, protect livestock, or exclude predators.

FENCE HEIGHT AND WIRE SPACING

Fence shall be constructed to the wire height and spacing shown below for the specific species and intended use. Fence height is measured from the ground at post locations. The bottom wire shall be attached 2 in. above the ground level at each post location. Woven wire shall be supplemented with **at least** one strand of barbed wire 3-4 in. above the mesh. In swales or gullies, the use of extra posts or rock weights shall be used to keep woven wire less than 4 in. above the ground.

1. Sheep – 26 in. woven wire, 1 barbed at 30 in.
2. Sheep/cattle – 26 in. woven wire, 1 barbed at 30 in. and 42 in.
3. Sheep/cattle – 34 in. woven wire, 2 barbed at 37 in., 42 in.
4. Sheep/cattle – 39 in. woven wire, 1 barbed at 42 in.
5. Deer/elk exclusion – two runs of 39 in. woven wire with 3 in. overlap, 1 barbed/smooth at 84 in.
6. Deer/elk exclusion – 1 run 78+ in. woven wire or no climb fence, optional barbed/smooth wire at 81 in.
7. Griz/wolf exclusion – Two runs 36 or 39 in. mesh with 3 in. overlap, or 6-ft. woven wire or no-climb.
8. Griz/wolf exclusion – 39 in. mesh with barbed at 39 in. (tied to woven), and barbed at 42 in., 48 in. and 54 in.
9. Beehive protection – Two runs of 34 in. or one run 60 in. plus woven wire or no-climb.
10. Human Safety – Alternatives a-d:
    a. 48 in. woven wire or no climb with one barb at 3-6 in. above the mesh.
    b. 39-42 in. woven wire or no climb with two barbs, one at 3 in. and 12 in. above the mesh.
    c. 60 in. chain link with internal top and bottom rail (or bottom tension wire) with 3 barb hanger.
    d. 72 in. chain link with internal top and bottom rail (or bottom tension wire) optional 3 barb hanger.

    - Safety fences around ponds shall be installed around the outside slope toe.
    - Safety fences around open tanks shall be installed at least 15 feet from the tank edge.
    - Safety fences shall have at least one corrosion-resistant warning sign per side. Sides longer than 200 feet shall have two warning signs.
    - All gates shall be assembled to the adjacent fence height. The maximum opening under the gate, within the gate posts, and between structural members shall be 4 in. Note: Pipe gates might include an external no climb wire overlay and extensions in order to meet the height and opening criteria.
    - Child proof gate latches or locks shall be installed.
    - Landowner shall check with their insurance company for more restrictive criteria.

FENCE HEIGHT and WIRE SPACING – OTHER CONSIDERATIONS

TABLE 1. Fence Height and Spacing Requirements – Intended Uses

INTENDED USE	FENCE HEIGHT AND LINE WIRE SPACING
Domestic livestock control with big game considerations with maximum height is 42”.	Maximum height of 42 in. (+ or - 2 in.) for the top wire. Minimum height will be 26 in. Wire spacing between the woven wire and the barbed wire shall be a minimum of 3 in. Pronghorn can jump fences 30 in. or less. Considerations will be needed for Pronghorn and other wildlife and their young of year that can’t jump. *See common alternatives below.
Domestic livestock control with big game considerations where top wire exceeds 44 in., but is not greater than 48 in.	If wire height exceeds 44 in., the distance between the top wire and the second wire will be at least 12 in. and provisions must be made at identified crossings for wildlife movement; both over and under the fence. These areas will not exceed 1/4-mile apart and there must be a minimum of one per fence. The fence in these designated crossing locations will not exceed 42 in. at the top wire and must include a minimum of one of the alternatives listed below to allow for wildlife movement. **See common alternatives below.
Wildlife exclusion - This type of fencing should be limited to special use where wildlife is causing crop damage or where wildlife/human conflicts can arise.	Minimum of 6-ft. woven with one to two strands smooth wire or barbed wire on top (12½ gauge). Ground to bottom of woven should be no more than ½ to 3 in. Deadman those areas where mesh is higher than 3 in.
Human Safety - Around ponds, tanks, etc.	See Item 10 above.

* **Common Alternatives.** For woven wire fences where management of sheep, goats, etc., is the principal objective but Pronghorn and other wildlife occur: Gates will be installed at approximately ¼-mile intervals and **should be** left open when no livestock are in the pasture.

** **Common Alternatives.** Smooth wire on top, top wire tied down between two posts, PVC on top wire for entire length between two posts; lower top wire in that stretch, wood rail at top wire between two posts maximum 38 in. high (38-in. elk jump), cattle guard for Pronghorn, extra stays so top and second wire will not cross, use no larger than 30 in. tall mesh and tie down barbed wire between posts to top of mesh. Minimum distance for chosen wildlife crossing is that distance between two posts or one rod (16.5), whichever is greater (see pdf for fence drawings).

MATERIALS

Fences shall be constructed of new wire materials, and new or pre-approved used post materials, with a minimum life expectancy of 20 years. All used post materials (e.g., railroad ties, power poles, drill stem) shall be pre-approved by the NRCS and meet or exceed the minimum quality criteria for extent, strength, and durability shown in Table 1. Wood posts shall be sound and free from decay. Steel posts shall be free from corrosion and pitting.

TABLE 2. Wire Type Requirements

WIRE TYPE	MINIMUM WIRE SIZE	MINIMUM PROTECTIVE COATING	STRAND-BREAKING STRENGTHS	OTHER
Standard Woven Wire. Wire must meet ASTM A-116 standards.	Top and bottom wires, 11 gauge, Intermediate and stay wires, 14½ gauge.	Class II zinc coating or equivalent 0.5 oz. per sq. ft. or wire surface.	950 lbs. minimum	Minimum of 7 horizontal line wires, not to exceed 12 in. between vertical wires and a minimum of 26 in. high. If barbed/smooth wire runs just below the top of woven wire (2-4 in.) no stays are required. If barbed/smooth wire is only above woven wire then stays are required at a maximum of 5-ft. spacing to keep wire from sagging. In lieu of stays, a smooth or barbed wire tie at approximately equal spacing tying the woven wire to the barbed/smooth wire is sufficient, minimum of two between posts.
High Tensile Woven Wire. Wire must meet ASTM A-854 standards.	Same	Class III galvanized per ASTM-854	1,400 lbs. minimum	Same
Chain Link (safety fence around pits, etc.)	9 gauge with 2-in. mesh, maximum	Class II galvanized per ASTM-392	1,290 lbs. minimum	7 gauge smooth wire or vinyl-coated wire for top and bottom tension wires.
No Climb (safety fence around pits, horse pastures, etc.)	Top and bottom wires. 10 gauge Intermediate and Stay Wires, 12½ gauge.	Class I or III galvanized ASTM-121	950 lbs. minimum	No greater than 2-in. spacing in the vertical wire mesh.
Game Fence - High Tensile	Top and bottom wire, 12½ gauge. Intermediate and stay wires, 14½ gauge.	Class-III galvanized ASTM-854	1,400 lbs. minimum	

Each woven wire fence type has a fence tag with a design number that accurately describes the configuration of the fencing material.

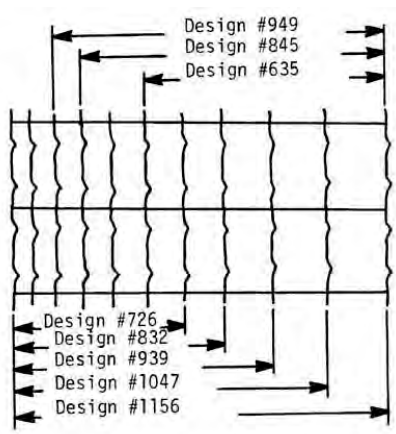

Figure 1. Diagram shows the wire spacing of each design number for woven wire (net)

In the Design Number:

1. The first one or two numbers relate to the number of line wires;
2. The next two numbers to the right specify the height of the wire in inches;
3. The next to last number grouping (either the number 6 or the number 12) identifies the spacing of vertical stay wires;
4. The final one or two numbers give the gage of intermediate wires.

For example, woven wire with "Design No. 726-12-11," has 7 line wires, is 26 in. high, the vertical stays are spaced 12 in. apart, and the intermediate wires are No. 11 gauge. Intermediate or filler wires include the horizontal line wires and all of the vertical stay wires between the top and bottom wires.

Other mesh-type fencing includes: Horse-no-climb used in corrals, feed lots, and small acreage areas. No-climb types of configurations used for horses and camelids to prevent potential injury to the animal are noted below in Figure 2.

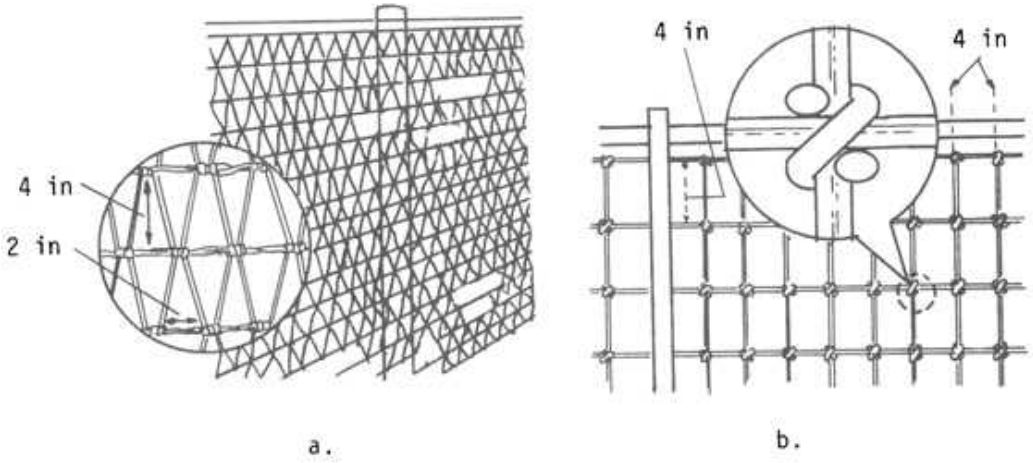

Figure 2. Diagram shows the different design configurations for woven wire (net)

POSTS AND STAYS

Wooden posts shall be used in high snowfall areas because of their extra strength. Steel line posts can be used in moderate to low snowfall areas, or in rocky areas where posts must be pounded or drilled to be set. Where woven wire fencing is less than 36 in. high, leave exaggerated lengths of posts projecting above the line wire (a contingency for future strands).

Posts shall be of sufficient length to meet fence height and setting depth requirements, plus 6 in., as shown in Table 3. Wood posts shall be driven or set in holes and backfilled with compacted earth or poured concrete. Earth backfill around posts shall be thoroughly tamped in layers not thicker than 4 in. and shall completely fill the post hole to the ground surface. Concrete backfill around posts shall be rodded into place in layers not thicker than 12 in. and shall completely fill the post hole to ground surface. Backfill, either earth or concrete shall be crowned up around posts at the ground surface.

Steel line posts shall be driven solidly into the ground until the spade is covered plus 1 knob, minimum of 16 in. If soil conditions prevent a firm setting, jack-leg (bucks) or wire cribs shall be used.

Chain link applications - Chain link fence shall have galvanized steel posts set in concrete. Posts shall be placed in the hole approximately 2 in. from the bottom. Concrete backfill around posts shall be rodded into place in layers not thicker than 12 in. and shall fill to a level approximately 2 in. below the ground elevation. Earth backfill shall be crowned up around posts at the ground surface.

TABLE 3. Line Post Requirements

Lengths listed below are based on a 42-in. top wire height. Chain link is based on 6-ft. tall fence.				
LINE POST TYPE	**MINIMUM DIAMETER/ SIZE**	**MINIMUM SETTING DEPTHS**	**MINIMUM LENGTHS**	**MINIMUM PROTECTIVE COATING, OTHER**
Wood-juniper, cedar	3½ in.	24 in.	6 ft.	None
Wood other than above	3½ in.	24 in.	6 ft.	Complete penetration of the sapwood with approved treatment materials. Pressure-treated, entire length of post (see note below).
Standard "T" or "U" section steel rolled with high carbon steel and studded, embossed, or punched for wire attachment with anchor plate.	1.25 lbs. per ft. of length, exclusive of anchor plates.	16 in. Top of the spade + 1 in., knob - minimum of 16 in.	5.0 ft.	Hot-dip galvanized, or one or more coats of high-grade, weather-resistant steel paint, or enamel-applied and baked.
Live trees	6 in. at top wire	Wire not wrapped or stapled directly to tree. A wood slat is nailed to the side of the tree and the wires stapled to the slat.		
Steel, round-chain link, with caps	1 7/8-in. O.D. 2.72 lbs./ lin. ft. Wall thickness .065 in. 16 gauge	Line posts, 6 in. diameter holes x 24 in. deep, concrete backfill. Terminal posts, 8-in. diameter holes x 30 in. deep, concrete backfill.	8 ft. with no barbed wire on top. Line posts should be height of the fence minus 3 in. When you add post cap and top rail the height will be accurate. If you use a tension wire in lieu of top rail, posts should equal the height of the fence.	Type III galvanized

NOTE: Chromated Copper Arsenate (CCA)-treated wood posts shall not be used where treated wood may come into contact with water sources (wetlands, streams, high water tables, etc.). Other chemically-treated and pressure-treated wood posts may be used in these areas. (EPA 2002)

TABLE 4. Line Post and Stay Spacing

FENCE TYPE	**LINE POST SPACING** (MAXIMUM INTERVAL)
Woven Wire Fence	16.5 ft. with no stays, if barbed/smooth wire runs just below the top of woven wire (2-4 in.). If barbed/smooth wire is only above woven wire, then stays are required at approximately a 5-ft. spacing, minimum of 2 stays between posts to prevent sagging, bending, etc. In lieu of stays, a smooth or barbed wire tie at approximately equal spacing tying the net wire to the barbed/smooth wire is sufficient, minimum two between posts. 30 ft. with two stays spaced equal distance apart between posts.
Chain Link (Human safety fence around waste storage facilities and other hazardous areas).	10 ft. One strand tension wire (7 gauge) along bottom and top attached to the chain link on 2-ft. centers. Additional strands of barbed wire above chain link as needed at 4-in. intervals.
No-Climb (safety fence around waste storage facilities, horse pastures, etc.)	14 ft. on safety fence; additional strands of barbed/smooth wire at 4-in. intervals above safety fence as needed. Minimum of one strand. 16.5 ft. for big game and livestock applications. Additional barbed/smooth wire strands above net wire, if needed.
Game Fence	16.5 ft. Additional barbed wire strands above woven wire, if needed.

TABLE 5. Stay Requirements

STAY TYPE	MINIMUM DIAMETER/WEIGHT	MINIMUM LENGTH
Wood	2.5 in. diameter	Fence height + 2 in., minimum
Wire	9½ gauge twisted, manufactured for this purpose; galvanized-zinc coated.	Distance between bottom and top wire + 4 in.
Fiberglass	Especially fabricated for this purpose.	Fence height + 2 in.

BRACING AND ALIGNMENT

Braces are required at all corners, ends, gates and definite angles (horizontal and vertical) greater than 15 degrees. Single sound wood posts, a minimum of 4 in. in diameter, buried 2.5 ft., spaced no more than 10 ft. apart are adequate for gentle turns less than 15 degrees without the need for bracing.

The maximum distance between brace spacing will be ¼-mile. It is more difficult to keep woven wire stretched and uniform in varied topography so additional bracing might be required. A single 5-in. diameter brace post, buried 3 ft. deep, spaced no greater than 330 ft. apart is required and sufficient to stretch the wire and add strength to the fence. It is not necessary to tie off at this single post.

Recommended brace types include the standard H-brace, the diagonal brace, or concrete reinforced post.

- Less than or equal to 90 degree corners – 3 post brace – horizontal or diagonal
- Greater than 90 degree corner – 4 post brace, double H or double diagonal
- Rock Cribs – (Min. 4.5 ft. x 4.5 ft. x 4.5 ft.)
- Rock jack
- Jack leg brace – wet, shallow, etc., (jack and wire fences require conventional bracing and/or the use of deadman).
- If using deadman alternatives – use caution as it relates to trapping livestock and wildlife as well as other possible safety issues. Placing a “split” PVC pipe over wires to make them more visible is an acceptable alternative.

See PDF drawings for corner and in-line bracing alternatives at:
http://www.mt.nrcs.usda.gov/technical/eng/drawings.html.

For Sheep/Cattle Fencing: Attach woven wire to posts, first determine the appropriate length of wire that is needed to wrap the wire around the post two complete times. Remove (cut) enough vertical stay wires to provide the needed amount of wire. Wire ends are then double-wrapped around the anchor posts, stapled and twisted back on the line wire with a minimum of five wraps. Wire should be stretched so that about one-third of the wire tension curve is removed. An alternative method would be using a 3½” diameter, treated, short wood post or 2 in. steel pipe where the woven wire is tied off to it and then that post is tied off to the brace post. This makes re-stretching the wire easier. You only have 3 to 4 wires to untie and re-tighten. The space between the short post and brace post should be no more than what is required to manage the animals being controlled. For Wildlife Exclusion (72” or larger height), woven wire should be attached to the corner and the H post - staples should be no less than 12 in. apart and wire should be overlapped and spliced by at least 12” and the end vertical wire removed and the horizontal wires used to wrap back on the adjoining fence length.

Chain link shall incorporate “H” type braces referred to as “truss” braces at ends, gates and corners with tension wire tied back to brace, end or corner post. Chain link is attached to each brace, end or gate post with the use of tension bands, tension bars, nuts and bolts. Determine the length of fence needed and remove a weave where terminating. To remove a weave, un-bend the end of the weave “knuckle” straight and un-bend the adjacent weave that is knuckled to it. If it has a twisted end, simply untwist the two weaves until they can be separated. Follow the weave to the other end and do the same. Spin the weave in a counter-clockwise (most new chain link) direction until done.

TABLE 6. Brace Post Requirements

Lengths listed below are based on a 42-in. top wire height. Chain link is based on 6-ft. tall fence.				
BRACE POST TYPE	**MINIMUM DIAMETER/ WEIGHT**	**MINIMUM SETTING DEPTHS**	**MINIMUM LENGTHS**	**OTHER**
Wood-juniper, cedar	5 in. Use 6-in. diameter post if fence is over 6 ft. tall.	3 ft. 3 ft.	7 ft. Buried depth + height of fence + 6 in.	None
Wood-pine or similar woods	5 in. Use 6-in. diameter post if fence is over 6 ft. tall.	3 ft. 3 ft.	7 ft. Buried depth + height of fence + 6 in.	Complete penetration of the sapwood with approved treatment materials, entire length of post (see note)
Steel, round	2 3/8-in. O.D., 3.65 lb./ft. or equivalent	3 ft. - set in 12-in. concrete. No concrete needed if welded or otherwise attached to compression brace. If rain, snow, or birds inside pipe posts is a concern, consider putting a cap on pipe or dig a deeper hole. Place gravel in hole and set end of pipe in gravel prior to filling hole with concrete.	7 ft.	Schedule 40 pipe will meet these requirements
Steel, angle iron	2.5 in. x 2.5 in. x 0.25 in.	Anchor post - 3 ft. set in 12-in. diameter concrete. Diagonal set in concrete 18 in. x 18 in. x 12 in.	7 ft.	Galvanized with 2 oz./sq. ft. zinc coating
Live trees	10 in. at top wire	Wire not wrapped or stapled directly to tree. Several wood slats spaced around the tree trunk provide protection if wire is wrapped around the tree. Staple wire to slats.		

TABLE 6 (continued). Brace Post Requirements

BRACE POST TYPE	MINIMUM DIAMETER/ WEIGHT	MINIMUM SETTING DEPTHS	MINIMUM LENGTHS	OTHER
Steel, round-**chain link**, with top cap	**Brace Post Size** 1 7/8 in. O.D. **Corner Post Size** 2 3/8 in. min. O.D. **Gate Post Size** **Gate-Single Leaf** ≤ 3 ft - **2/38 in O.D.** (Standard size) >3 - ≤ 7 ft. - **2.3/8 in. O.D.** > 7 ft. - 12 ft. - **4 in OD** **Gate Double Leaf** ≤ 24 ft - **4 in. O.D.**	36 in. in 8-in. diameter Concrete Min. 36 in. in 12-in. diameter Concrete Min. 36 in. in 12-in. diameter Concrete Min. 36 in. in 12-in. diameter Concrete Min. Rule: Three times the diameter of the post, minimum of 8 in.	9 ft. with no barbed wire on top. End, corner, and gate posts should be the height of the fence plus 1 in. When you add post cap and top rail the height will be accurate. If you use a tension wire in lieu of top rail, posts should equal the height of the fence. For chain link, 3/8 in. diameter truss rods will be used at end, corners and gates.	Type III galvanized.
Concrete	10 in. x 10 in. with four #4 bars, Grade 60	4.5 ft.	8.5 ft.	See Figure 4 below.

NOTE: Chromated Copper Arsenate (CCA)-treated wood posts shall not be used where treated wood may come into contact with water sources (wetlands, streams, high water tables, etc.). Other chemically-treated and pressure-treated wood posts may be used in these areas. (EPA 2002)

HORIZONTAL BRACES (compression post)

Horizontal brace members (compression posts) shall be at least 6 ft. in length and notched into the top half of the brace post and anchor post, at a minimum of 36 in. above ground level and below the top 6 in. of the brace and anchor post. Steel dowels, spike, welded, etc., can be used, rather than notching, to attach horizontal brace between anchor post and brace post. On fences taller than 4 ft., the compression brace shall be in the top one-third of the post but not closer than 6 in. from the top of the post.

The brace member will be a minimum of 1 ft. longer than the anchor post is high above the ground surface and a minimum of 6 ft. Example: An 8 ft. tall post (above ground) on a deer fence will require a 9 ft. horizontal brace.

TABLE 7. Brace Member (Compression) Requirements

BRACE MEMBER TYPE	MINIMUM DIAMETER/WEIGHT	MINIMUM LENGTH	OTHER
Wood, horizontal	3.5 in.	6 ft.	Juniper, cedar, no treatment needed. All others pressure-treated, entire length of post
Wood, diagonal	3.5 in.	8 ft.	Juniper, cedar, no treatment needed. All others pressure-treated, entire length of post
Steel, round, horizontal, pipe or tubular steel	2 in. O.D. 2.25 lb./ft. or equivalent	6 ft.	None
Steel, round, diagonal, pipe or tubular steel	2 in. O.D. 2.25 lb./ft. or equivalent	8 ft.	None
Steel, angle iron, diagonal (when used with and all metal brace system)	2 in. x 2 in. x 0.25-in.	8 ft.	None
Steel, round-Chain link Top and mid “rails” otherwise called horizontal braces.	1 5/8 in. O.D. Minimum	10 ft.	On corners, ends and gates.

DIAGONAL BRACE ALTERNATIVE #1 (compression post)

The corresponding diagonal brace length will be a minimum of 1.3 times the length of the horizontal brace. The top end of wooden diagonal brace members shall be notched into the post being braced (anchor post) approximately 6 in. below the top of the post. Secure the brace member to the bottom brace post as well to prevent sideways movement. Steel dowels, toe nails, etc., can be used rather than notching, to attach diagonal brace member between anchor post and brace post. In lieu of a buried brace, the diagonal compression brace may rest on a rock, disk or other sound structure a minimum of 1 ft. square that is capable of preventing the brace from contacting the soil surface. Refer to Figure 3.

DIAGONAL BRACE ALTERNATIVE #2 (tension wire)

Diagonal brace wires run opposite of diagonal brace posts. Brace wires shall consist of two complete loops of the following alternatives:

1. No. 9 gauge smooth wire, single strand.

2. No. 12½ gauge double-strand smooth wire, or barbed.

3. No. 12½ gauge high-tensile smooth wire (single wrap).

4. No. 6 gauge smooth wire, single strand for chain link.

Brace wires shall extend from a point approximately 2 in. below the top of the brace post to as close to ground level as possible on the anchor post. The brace wire should never be secured on the brace post higher than the top of the anchor post or it will pull the anchor post up to that level (see Figure 3). The brace wires shall be double-wrapped (single for high tensile) around each post, stapled and spliced together. A stick, pipe, etc., of appropriate strength, about 18 to 24 in. long, is placed midway along the brace wires, and all four wires are twisted together so the brace wires tightly secure the compression brace and provide

needed rigidity. An in-line strainer can be used for high-tensile wire in lieu of twisting wires. See manufacturer recommendations for chain link.

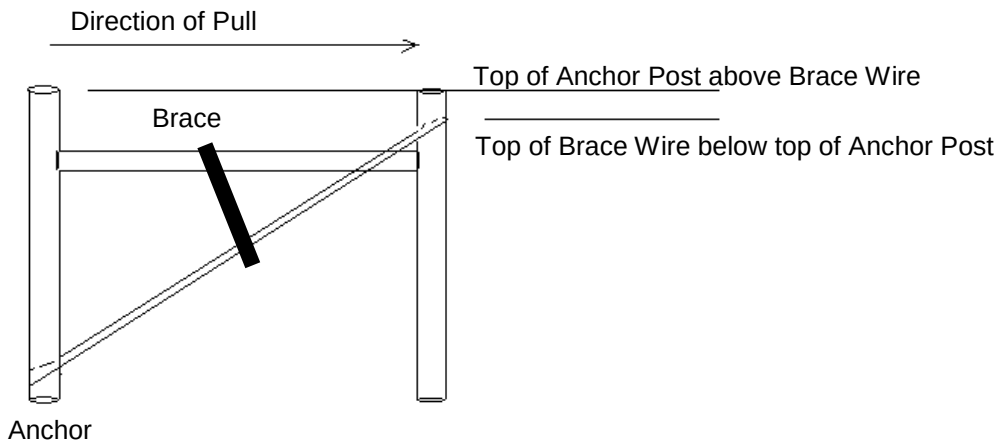

Figure 3. Diagonal Brace Wire

TABLE 8. Rock-Jacks Used as Brace Posts

ROCK-JACK COMPONENTS	MINIMUM DIMENSIONS	LENGTH
Anchor Post	4 in. x 4 in. dimensional-treated lumber or 5 in. diameter post	4.5 ft.
Diagonal Braces (legs)	2 in. x 6 in. dimensional-treated lumber or 4-in. round posts or 5-in. split poles	9 ft.
Ground Piece	2 in. x 6 in. dimensional-treated lumber or 4-in. round posts or 5-in. split poles	8 ft.
Flooring	2 in. x 6 in. dimensional-treated lumber	6 ft., 5.5 ft., 5 ft., and 4.5 ft., 4 ft., 3.5 ft., 3 ft. and 2.5 ft. (Refer to drawing)

NOTE: Chromated Copper Arsenate (CCA)-treated wood posts shall not be used where treated wood may come into contact with water sources (wetlands, streams, high water tables, etc.). Other chemically-treated and pressure-treated wood posts may be used in these areas. (EPA 2002)

TABLE 9. Rock-Jacks Used as Fence Corners and Gates

ROCK JACK COMPONENTS	MINIMUM DIMENSIONS	LENGTH
Anchor Post	6 in. x 6 in. dimensional-treated lumber or 5-in. diameter post	4.5 ft.
Diagonal Braces (legs)	2 in. x 6 in. dimensional-treated lumber, 4-in. round posts or 5-in. split poles	9 ft.
Ground Piece	2 in. x 6 in. dimensional-treated lumber, 4-in. round posts or 5-in. split poles	8 ft.
Flooring	2 in. x 6 in. dimensional-treated lumber	6 ft., 5.5 ft., 5 ft., 4.5 ft., 4 ft., 3.5 ft., 3 ft. and 2.5 ft. (Refer to drawing)

NOTE: Chromated Copper Arsenate (CCA)-treated wood posts shall not be used where treated wood may come into contact with water sources (wetlands, streams, high water tables, etc.). Other chemically-treated and pressure-treated wood posts may be used in these areas. (EPA 2002)

The anchor post is set on the ground. The floor of the Rock-jack shall be constructed of 2-in. x 6-in. boards. Do not nail the platform down. Once the Rock-jack frame is constructed and the floorboards are in place, rocks are placed on the Rock-jack floor. Large rock weights will be placed at each joint with lesser-weight rock distributed evenly over the rock platform. Weight of rock on the platform is 2,000 pounds for a 3-wire fence and 2,700 pounds for a 4-wire fence. Line wires are stapled to the anchor post of the line Rock-jack.

CONCRETE BRACE AND CORNER POSTS

Reinforced concrete posts may be used in any acceptable field conditions, but are specifically required in areas where the soils are corrosive or highly corrosive when EC_e (Electrical Conductivity - Soil) $\geq$ 8 mmhos/cm). They can be used as line posts, corner posts, or as brace posts without brace members (stand-alone post).

All concrete posts shall use 3,000 psi air-entrained concrete and shall be reinforced with a minimum of four #4 grade 60 rebar that run the length of the post minus 3 in. at top and bottom (e.g., 8-ft. rebar length in a 8.5-ft. long post). Each rebar shall be located 2.5 in. from the nearest outside edges of the post (see Figure 4). The posts shall be a minimum of 10-in. x 10-in. diameter for the entire length of the post.

Bracing of concrete corner posts shall be accomplished using a minimum of 2 anchor wires, double-wrapped, connected to the concrete post 6 in. from the top of the post and connected to a buried deadman. The deadman shall be rigid, with minimum diameter of 12 in., set into the ground at a minimum of a 4-ft. depth. Earth backfill on top of the deadman shall be thoroughly tamped in layers not thicker than 4 in. and shall completely fill the hole to the ground surface. Connect the anchor wires to the deadman in approximately a 45-degree angle from the post (resulting in deadman location being approximately 4.5 ft. away from the post). To improve the visibility and service life of the anchor wire, PVC or HDPE pipe should be slit lengthwise and slipped over the wire throughout its exposed length.

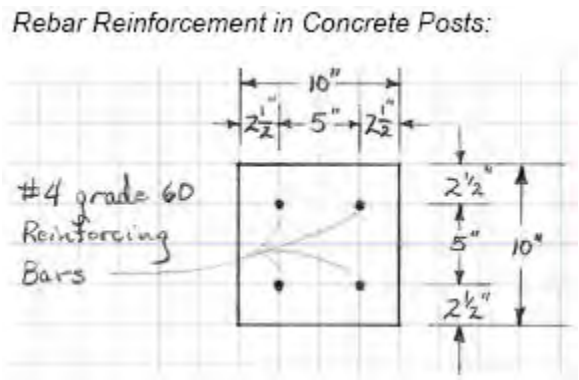

Figure 4. Rebar Reinforcement in Concrete Posts

Allow concrete to cure for a minimum of 7 days (Construction Specification 91) prior to putting any stress on the posts.

SPLICING

When splicing of barbed and smooth wire is necessary, use conventional wire-loop, "Western Union" splice or compression fittings.

Figure 5. Compression fitting

Figure 6. "Western Union" splice

Splicing woven or net wire (see Figure 7) is easy and effective. Make splices by cutting wire so 4 in. of each line wire extends beyond the stay wires. Pull ends of fence together until stay wires meet. Bend the line wires of one fence section around the line wires of the other fence section and wrap. Use a splicing key if necessary to twist the wire end around the line wire at least three times; keep the twists as close together as possible to form a tight, knot. Compression sleeves can also be used if preferred.

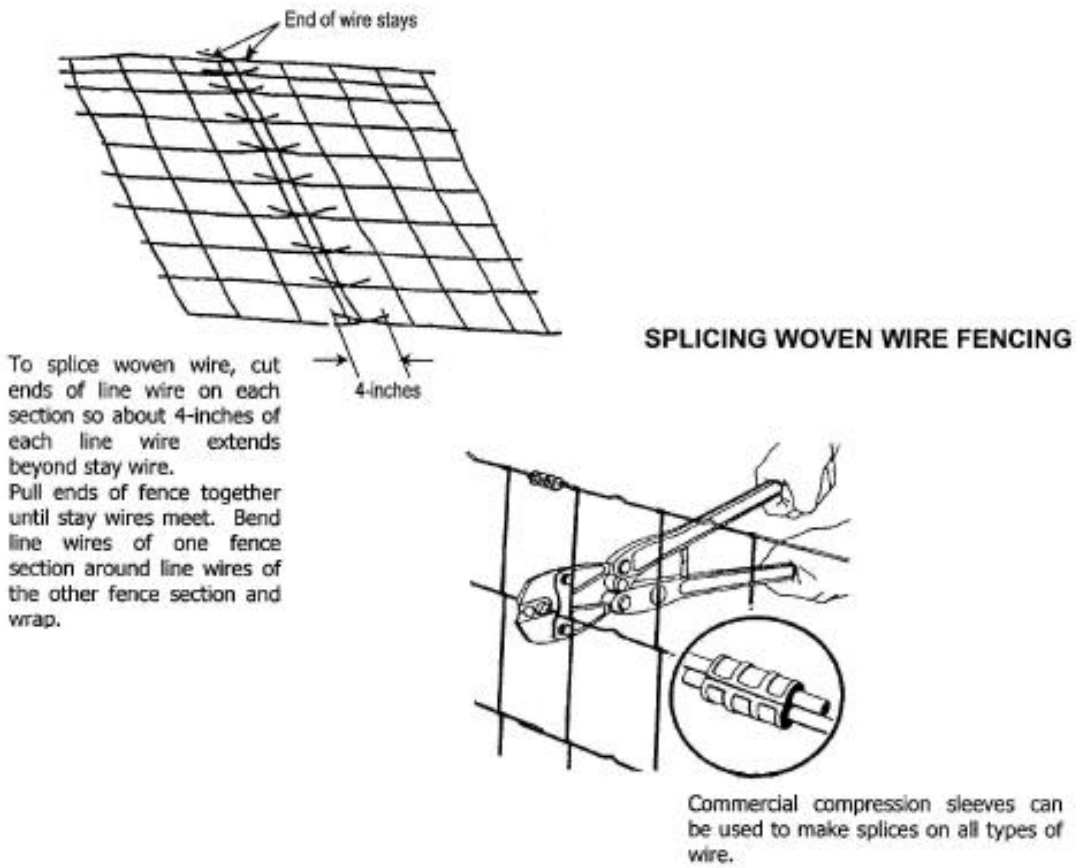

Figure 7. Example of splicing woven wire fence

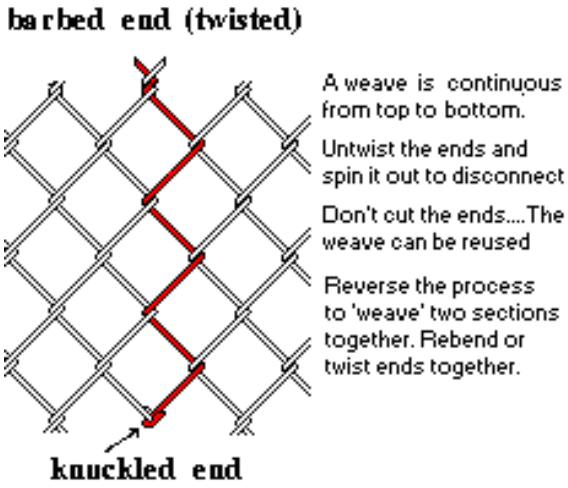

Figure 8. Example of how to remove or to join "Chain Link" fence

STAPLES AND FASTENER REQUIREMENTS

Staples shall be driven into the post at a 45-degree angle to prevent the post from splitting through the prongs and releasing the staple as the wood post dries/expands/contracts. Staples shall be driven just deep enough to snug the line wire without bending it.

TABLE 10. Staples and Fastener Requirements

U-shaped staple, conventional wire: No. 9 gauge galvanized wire or bright hard wire; at least 1-¼ in. long.
L-shaped deformed shank staple: No. 9 gauge galvanized wire or bright hard wire; at least 1-¼ in. long.
Fence wire shall be fastened to steel posts using steel clips manufactured for the purpose of attaching wires, or 9 gauge smooth wires.
Other post types will use fasteners and methods recommended by the manufacturer.

GATES

When installing gates on chain link, install gate posts with the exact opening size as recommended by the gate supplier or manufacturer. A security lock or latch shall be installed to fit the application.

Gates used in a woven wire fence should be made of similar material as the fence to achieve the same objective. Manufactured gates can be used if capable of meeting the objective of the fence.

See additional gate design details for “Chain Link” on the plan drawings.

Gates should be left open when livestock are not in the pastures to allow for wildlife movement, especially yearlings.

CROSSING DRAWS OR STREAMS

When the fence crosses landscape depressions, draws, or swales, and the bottom line wire is more than 2 in. above the ground at the low spot, the use of a deadman may be necessary to maintain fence height. When crossing the streams or very deep draws, the fence may be dead-ended on each side of the crossing by use of braces. The section across the stream may be removable, a breakaway type, or swinging picket-type fence.

SPECIAL CONSIDERATIONS

SAGE GROUSE HABITAT

- New woven wire/net wire and chain link fencing will be avoided in sage grouse habitats.
- For existing woven wire/net wire fences see the special considerations for sage grouse section in the barbed and smooth wire fence specification.

HORSES

Woven wire is not considered safe for large wildlife species, especially in travel corridors. In addition, horses can get hooves caught between wires if the mesh is too large. Consider no climb fence or smooth wire strand fence when dealing with horses.