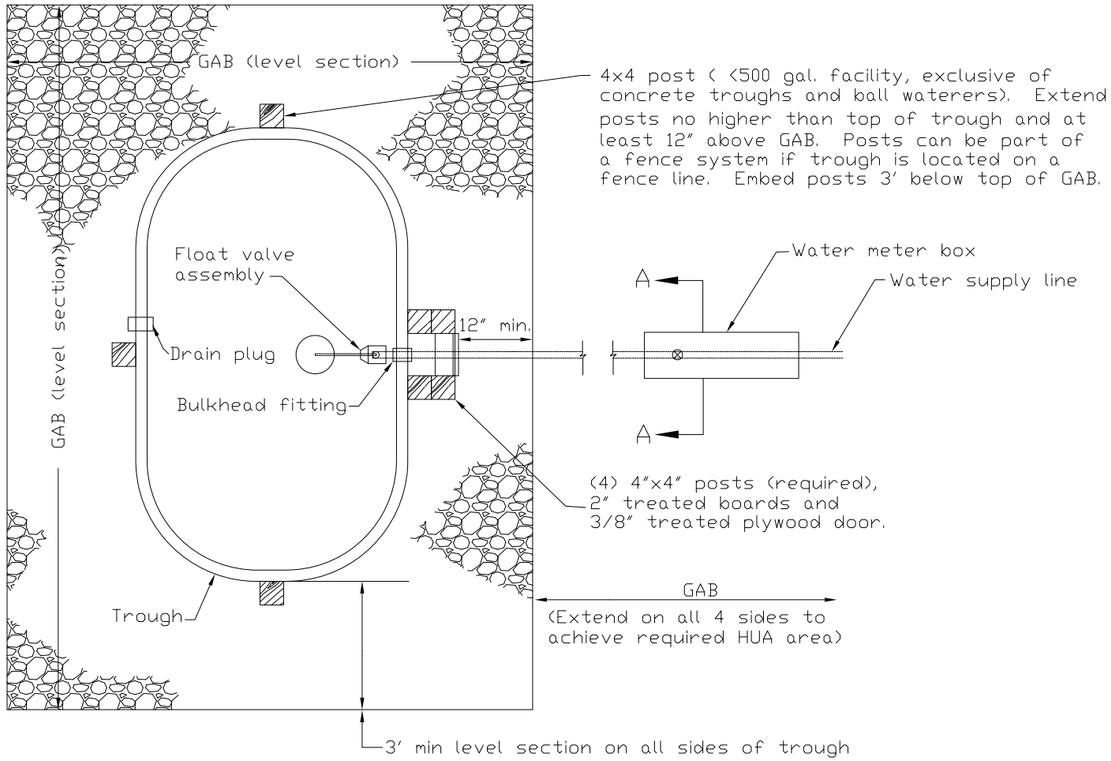

PLAN VIEW

NOTES:

1. Details on this sheet are not to scale.
2. All wood dimensions are nominal sizes.
3. All wooden components shall be pressure treated and rated for in-ground use. Fasteners and hardware shall be compatible with the pressure treatment type.
4 See AL-ENG-561-02a for layout of trough and Heavy Use Area and for material requirements for Heavy Use Area.
5. Line the inside of the pipe enclosure with 1" min. thickness foam insulation board. Attach with appropriate screws, nails or construction adhesive.
6. The pipe enclosure shall be sealed where it abuts the trough by expanding insulation foam, caulking or other appropriate means.
7. At least 2" of vertical clearance shall be provided between the top of the water supply pipe and the bottom edge of the water meter box or other cutoff valve enclosures.
8. The water meter box (or equivalent) shall be located outside the Heavy Use Area and suitably protected.
9. If other structures are used to enclose the cutoff valve, they shall have an appropriate cover.
10. In lieu of cutting a hole in the side of the trough, the water supply may be plumbed through the drain plug fitting using adapters compatible with the drain plug threads. When this method is used, other fittings or methods shall be provided to drain the trough.
11. Flexible hose shall meet system pressure requirements.

SEQUENCE OF CONSTRUCTION (GENERAL)

1. Shape and compact the subgrade as specified.
2. Excavate the pipeline trench to the trough location
3. Install the water supply pipe to the trough and backfill the pipe trench as specified.
4. Place the 2x2 gravel drainage pad and set the water meter box or alternative valve encasement.
5. Set posts if required.
6. Install the GAB.
7. Set trough and make plumbing connections.
8. Test plumbing for leaks.
9. Construct pipe enclosure with insulation. Caulk as necessary to ensure an air-tight enclosure.
10. Complete construction of Heavy Use Area.
11. Smooth site and vegetate disturbed areas.

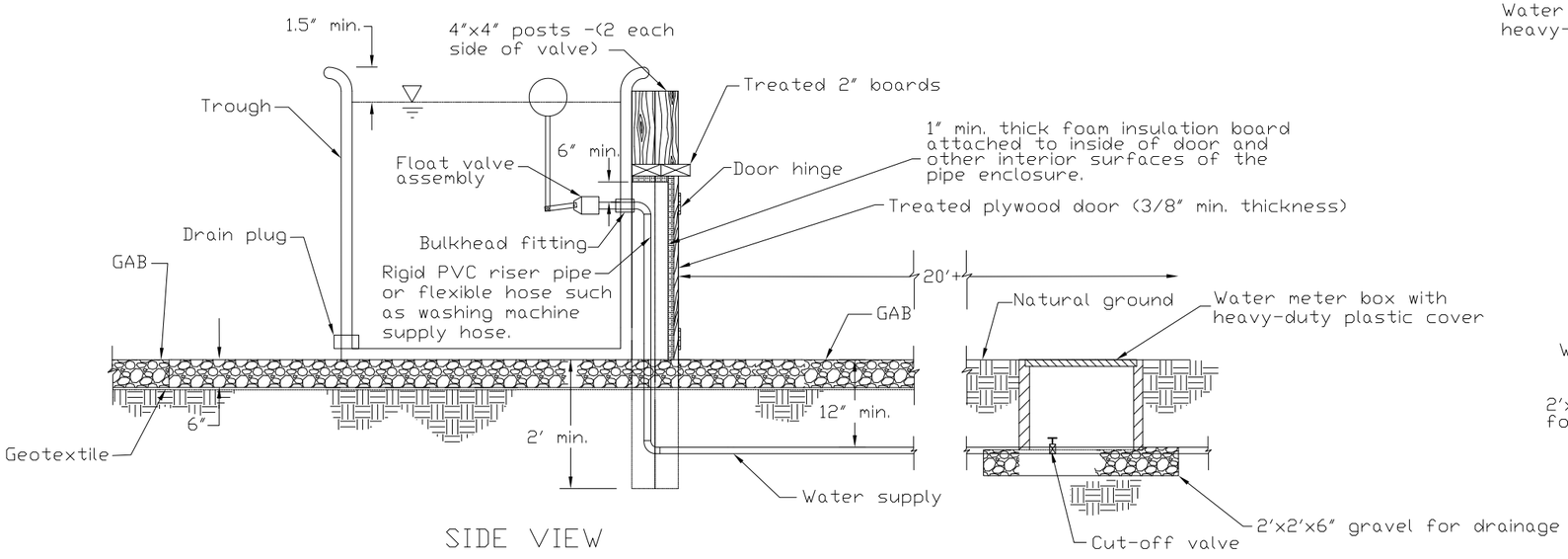

SIDE VIEW

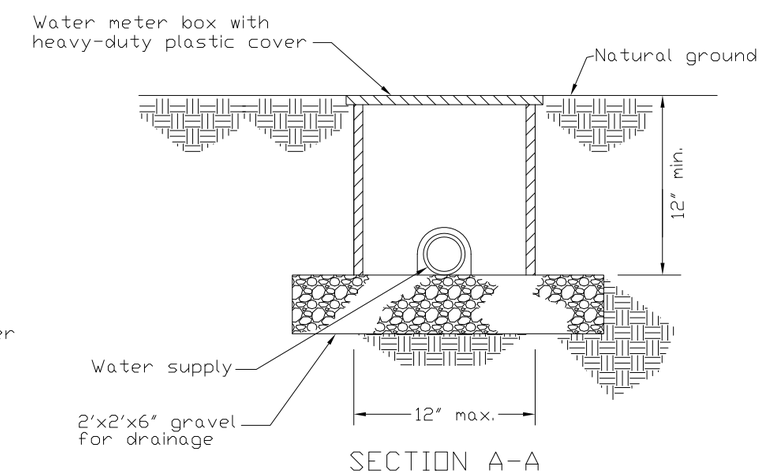

SECTION A-A

Date

Designed

Drawn

Checked

Approved

FREEZE-PROOF WATER SUPPLY FOR SIDE-PLUMBED WATER TROUGHS (GAB ONLY)

LANDOWNER

COUNTY, ALABAMA

NRCS

Natural Resources Conservation Service

United States Department of Agriculture

Rev. 6/13

Drawing No.

AL-ENG-614-02a

Sheet of