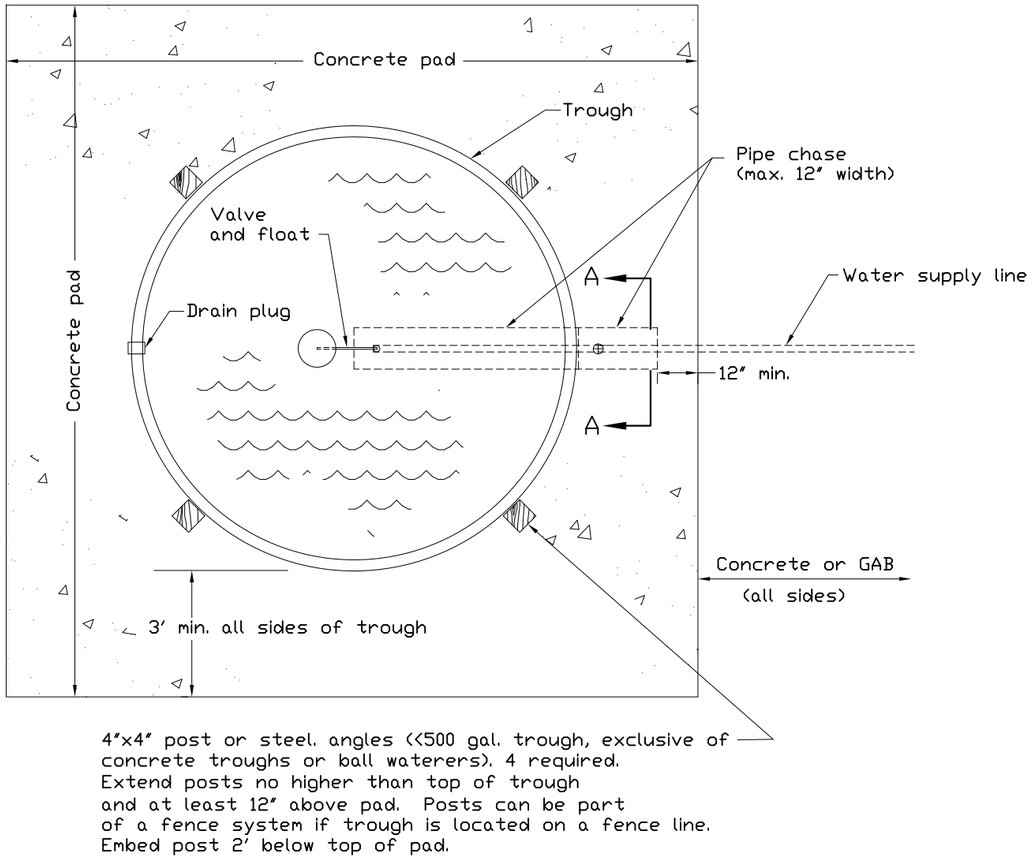

PLAN VIEW

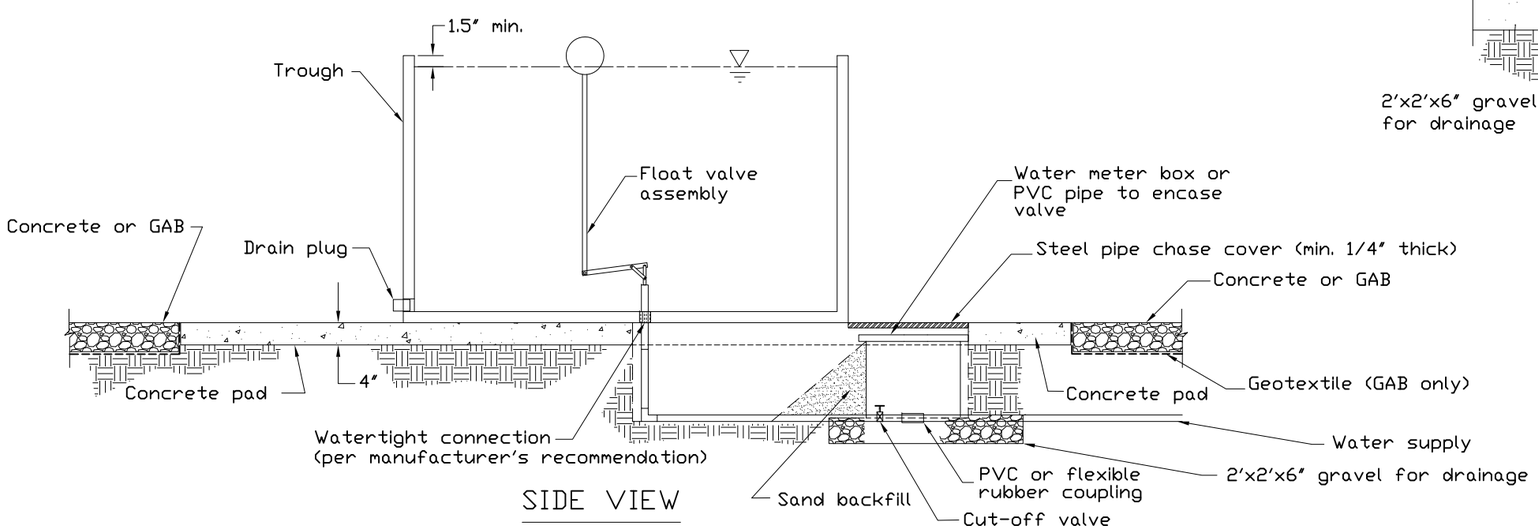

SIDE VIEW

NOTES:
1. Details on this sheet are not to scale.
2. All wood dimensions are nominal sizes.
3. All wooden components shall be pressure treated and rated for in-ground use.
4 See AL-ENG-561-01 or AL-ENG-561-02 for layout of trough and Heavy Use Area and for material requirements for Heavy Use Area.
5. In lieu of a meter box, the cutoff valve enclosure can be other appropriate structures such as a section of large diameter PVC pipe.
6. At least 2" of vertical clearance shall be provided between the top of the water supply pipe and the bottom edge of the water meter box or other cutoff valve enclosures.
7. The water meter box (or equivalent) may be located outside the Heavy Use Area if suitably protected.
8. Prior to placement of a concrete trough, place a thin layer of concrete mortar on the concrete pad to provide uniform bearing for the trough.

SEQUENCE OF CONSTRUCTION (GENERAL)

1. Shape and cpmpact the subgrade as specified.
2. Excavate the pipeline trench and pipe chase trench. If soils are sandy and tend to cave, it may be necessary to form the sides of the pipe chase in order to pour the concrete slab. Forms may be built of treated plywood and left in place.
3. Place the 2x2 gravel drainage pad.
4. Install the water supply pipe to the pipe chase and backfill the pipe trench as specified.
5. Set posts (if used) and form the concrete pad.
6. Pour the concrete pad.
7. Allow at least 24 hours after concrete is poured before removing forms.
8. Attach plumbing to bottom of trough and set trough in place.
9. Connect plumbing to water supply pipe and check for leaks.
10. Set meter box or alternative valve enclosure and fill around valve enclosure with sand. Fill on the back side of the valve enclosure as much as practical.
11. Place pipe chase cover.
12. Complete construction of Heavy Use Area.
13. Smooth site and vegetate disturbed areas.

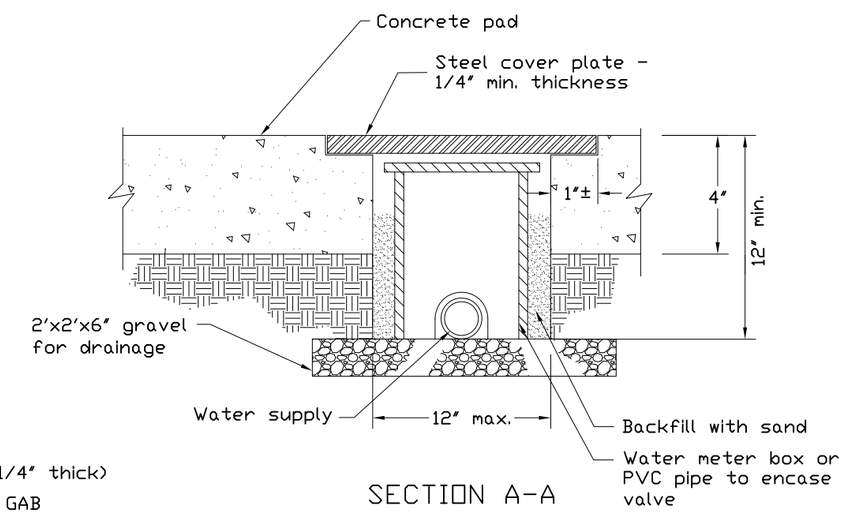

SECTION A-A

Date
Designed
Drawn
Checked
Approved

FREEZE-PROOF WATER SUPPLY FOR
BOTTOM-CONNECT WATER TROUGHS

LANDOWNER

COUNTY, ALABAMA

NRCS
Natural Resources Conservation Service
United States Department of Agriculture

Rev. 5/13

Drawing No.
AL-ENG-614-01

Sheet of